STRUCTURAL STEEL NOTES

A. GOVERNING SPECIFICATIONS

1. ANCHOR BOXES, SPACER BOXES AND RELATED PARTS SHALL COMPLY WITH THE FOLLOWING SPECIFICATIONS AND THESE GENERAL NOTES.
2. PROVIDE STRUCTURAL STEEL IN ACCORDANCE WITH GOVERNING SPECIFICATIONS HARBOR ITEM 441 "STEEL STRUCTURES".
3. PROVIDE SHEAR CONNECTORS IN ACCORDANCE WITH GOVERNING SPECIFICATIONS HARBOR ITEM 442 "METAL FOR STRUCTURES".
4. PROVIDE GALVANIZING WHERE REQUIRED IN ACCORDANCE WITH GOVERNING SPECIFICATIONS HARBOR ITEM 445 "GALVANIZING".

B. MATERIALS

1. STEEL PLATE MATERIAL:
   a. THICKNESS 2IN AND THICKER: ASTM A709 HPS 50W
   b. THICKNESS LESS THAN 2IN: ASTM A709 GRADE 50
2. MAIN STEEL BRIDGE MEMBERS ARE IDENTIFIED ON THE DRAWINGS AS SYSTEM REDUNDANT MEMBERS (SRM), MAIN TENSION MEMBERS (T) OR MAIN COMPRESSION MEMBERS (C).
3. ALL ELEMENTS MARKED AS SRM SHALL MEET THE IMPACT TEST REQUIREMENTS OF ASTM A709 TABLE 11 TEMPERATURE ZONE 1
4. ALL ELEMENTS MARKED AS T SHALL MEET THE IMPACT TEST REQUIREMENTS OF ASTM A709 TABLE 10 TEMPERATURE ZONE 1
5. A THROUGH THICKNESS TENSION TEST SHALL BE CARRIED OUT ON ALL PLATES 1 3/8" THICK OR GREATER IN ACCORDANCE WITH ASTM A770, SUPPLEMENTARY REQUIREMENT S3, 35% MINIMUM REDUCTION IN AREA.
6. WIDE FLANGE SECTIONS: ASTM A992, Fy=50KSI.
7. ANGLE SECTIONS: ASTM A529, Fy=50KSI.
8. RECESS PIPES: ASTM A500 GRADE B. PIPES THAT MEET API STANDARD 5L GRADE X52 MAY BE USED IF PRODUCED BY A MILL LISTED IN THE STANDARD API SPECIFICATIONS AS AUTHORIZED TO PRODUCE PIPE WITH THE API MONOGRAM.
9. SHEAR STUDS: AWS D1.5 TYPE B HEADED STUDS IN ACCORDANCE WITH ASTM A108 WITH MINIMUM YIELD STRENGTH OF 50KSI AND MINIMUM TENSILE STRENGTH OF 60KSI.
10. TEMPORARY BRACE BOLTED CONNECTIONS SHALL BE MADE WITH HIGH STRENGTH BOLTS CONFORMING TO ASTM F3125 GR.490.

C. WELDING

1. ALL WELDING SHALL COMPLY WITH THE PROVISIONS OF AASHTO/AWS D1.5 BRIDGE WELDING CODE.
2. ALL WELDING ELECTRODES SHALL BE APPROPRIATELY MATCHED AND SHALL BE STRENGTH GRADE E70.
3. WELD DETAILS SHOWN ON THESE DRAWINGS ARE INDICATIVE ONLY. FABRICATOR TO DEVELOP DETAILS IN CONJUNCTION WITH DISTORTION CONTROL PLAN.
4. THE CONTRACTOR SHALL DEVELOP PROCEDURES FOR THE CONTROL OF DISTORTION AND SHRINKAGE STRESSES WHICH, IN CONJUNCTION WITH THE OVERALL FABRICATION METHODS, WILL PRODUCE MEMBERS AND STRUCTURES THAT MEET THE DIMENSIONAL AND QUALITY REQUIREMENTS OF THE DESIGN DOCUMENTS. THIS DISTORTION CONTROL PLAN SHALL BE DEVELOPED IN ACCORDANCE WITH AWS D1.5 SECTION 3.4. THESE PROCEDURES AND ANY REVISIONS NECESSARY DURING THE COURSE OF THE WORK SHALL BE SUBMITTED TO THE DESIGNER FOR REVIEW.
5. SYSTEM REDUNDANT MEMBERS SHALL BE FABRICATED TO THE REQUIREMENTS FOR FRACTURE CRITICAL MEMBERS AND INSPECTED IN ACCORDANCE WITH AASHTO / AWS D1.5 "FRACTURE CONTROL PLAN FOR NON-REDUNDANT MEMBERS".
6. ALL WELDS SHALL RECEIVE 100% VISUAL INSPECTION AFTER THE COMPLETION OF THE WELD. ALL WELDS SHALL ALSO RECEIVE 100% VISUAL INSPECTION AFTER THE FABRICATION OF THE ELEMENT IS COMPLETE. VISUAL INSPECTION SHALL NOT BE CONSIDERED AN NDT METHOD.
7. ALL COMPLETE PENETRATION GROOVE WELDS IN TENSION AND STRESS REVERSAL AREAS SHALL BE EVALUATED BY AND CONFORM TO ULTRASONIC TESTS AS DESCRIBED IN AWS D1.5. THE TESTING MUST BE COMPLETED BEFORE REPAIRS ARE MADE TO THE WELD.
8. COMPLETE PENETRATION GROOVE WELDS IN COMPRESSION OR SHEAR SHALL BE EVALUATED IN ACCORDANCE WITH SECTION 6.7.1.2 OF AWS D1.5, FREQUENCY OF TESTING SHALL BE 100%.
9. EACH BOX SHALL BE MARKED ON ITS OUTSIDE WITH ITS TOWER NAME, BOX NO. AND ORIENTATION (MAIN SPAN OR BACK SPAN). EACH CABLE ANCHOR SHALL BE MARKED WITH ITS ARTICLE NUMBER (ANCHOR SIZE).

D. FABRICATION TOLERANCES

1. DIMENSIONS SHOWN ON THE DESIGN DRAWINGS ARE AT A REFERENCE TEMPERATURE OF 70°F. THE NECESSARY DIMENSIONAL ADJUSTMENTS FOR ACTUAL TEMPERATURES AT THE TIME AND PLACE OF FABRICATION SHALL BE MADE.
2. DIMENSIONS GIVEN ARE GEOMETRIC DIMENSIONS OF THE FINISHED FABRICATION. ADJUSTMENTS TO PLATE CUTTING DIMENSIONS TO COMPENSATE FOR TOLERANCES, FABRICATION EFFECTS, WELD PREPARATIONS SHALL BE MADE AS NECESSARY.
3. FABRICATION TOLERANCES SHALL BE IN ACCORDANCE WITH AASHTO / AWS D1.5 AND AS SPECIFIED IN THE DESIGN DOCUMENTS.
4. FABRICATED ELEMENTS THAT DO NOT CONFORM TO THE TOLERANCES SPECIFIED IN THE DESIGN DOCUMENTS SHALL BE REJECTED. ALL TOLERANCES FOR THE ANCHOR BOX SHALL BE COORDINATED WITH TOLERANCES FOR THE STAY CABLES AND ANCHORAGES.
5. TOLERANCES (+/-) ON SPECIFIC DIMENSIONS SHALL BE AS GIVEN BELOW:
   a. ALIGNMENT OF THE ANCHOR PLATE AT EACH DEAD ANCHOR SHALL BE NO MORE THAN +/- 0.30°.
   b. BEARING SURFACE FLATNESS OVER THE DEAD ANCHOR BEARING AREA SHALL BE NO MORE THAN 1/500 OF THE DEAD ANCHOR OD.
   c. LENGTH OF VERTICAL EDGES OF EACH SIDE PLATE OR END PLATE SHALL DIFFER BY NO MORE THAN 1/16".
   d. LENGTH OF HORIZONTAL EDGES OF EACH SIDE PLATE OR END PLATE SHALL DIFFER BY NO MORE THAN 1/8".
   e. THE DIAGONAL DIMENSIONS FOR EACH SIDE PLATE AND END PLATE SHALL BE WITHIN 1/8".
   f. EACH BOX SHALL BE SQUARE IN PLAN. THE TWO DIAGONAL DIMENSIONS SHALL BE WITHIN 1/8".
   g. AT WORK POINTS T2 AND T3 THE RECESS PIPE CENTER-LINE SHALL BE WITHIN 1/8" OF THE STRAIGHT LINE PASSING THROUGH WORK POINTS T1 AND T3.
   h. LOCATION OF SHEAR STUDS SHALL BE WITHIN 3/8".

E. SHOP ASSEMBLY

1. PRIOR TO SHOP ASSEMBLY, THE CONTRACTOR SHALL SUBMIT TO THE DESIGNER FOR APPROVAL A DETAILED PLAN SHOWING THE PROPOSED SHOP ASSEMBLY ARRANGEMENT AND PROCEDURES FOR DIMENSIONAL CONTROL. THE PLAN SHALL INCLUDE METHODS TO BE USED FOR MEASURING, RECORDING, AND CONTROLLING THE GEOMETRY OF THE SHOP ASSEMBLY. THE OVERALL METHODOLOGY, LOCATIONS OF ALL SURVEY CONTROL POINTS, TEMPERATURE MEASUREMENT AND COMPENSATION TECHNIQUES, SCHEDULE OF SURVEYS, AND OTHER PERTINENT INFORMATION TO BE USED IN THE SHOP ASSEMBLIES SHALL BE CLEARLY IDENTIFIED ON THE PLAN.
2. CABLE ANCHOR BOXES AND SPACER BOXES SHALL BE SHOP ASSEMBLED USING PROGRESSIVE COMPONENT ASSEMBLY. ASSEMBLY SHALL START AT ONE END, AND THERE SHALL BE AT LEAST THREE ANCHOR BOX / SPACER BOX SECTIONS IN ASSEMBLY AT ALL TIMES.
3. ALL STEEL REQUIRED TO BE SHOP ASSEMBLED SHALL BE ALIGNED SO THAT THE CONTROL POINTS ARE WITHIN +/- 1/8" FROM THE LOCATIONS ON THE APPROVED SHOP DRAWINGS, UNLESS MORE STRINGENT TOLERANCES ARE PROVIDED ELSEWHERE IN THE DESIGN DOCUMENTS. THIS TOLERANCE SHALL APPLY TO THE X, Y, AND Z COORDINATES (I.E. IN ALL THREE DIMENSIONS).

F. MOCK UP

1. THE CONTRACTOR SHALL PROVIDE A MOCK UP OF ONE ANCHOR BOX 19 INCLUDING RECESS PIPES AND SHEAR STUDS. THE MOCK UP AND A DETAILED REPORT AND SURVEY OF ITS FABRICATION SHALL BE SUBMITTED FOR APPROVAL BY BOTH THE DESIGNER AND THE CONSTRUCTION QUALITY ACCEPTANCE MANAGER (CQAM).
2. MOCK UP SHALL DEMONSTRATE APPROPRIATENESS OF SHOP ASSEMBLY PROCEDURES, INCLUDING CONTROL OF DISTORTION AND SHRINKAGE, FOR DIMENSIONAL CONTROL AND FABRICATION TOLERANCES, AND WELD PROCEDURES.
3. FABRICATION OF OTHER ANCHOR BOXES SHALL NOT BEGIN BEFORE THE MOCK UP IS APPROVED BY BOTH THE DESIGNER AND CQAM.
4. MOCK UP SHALL NOT BE USED IN THE PERMANENT WORKS UNTIL IT HAS BEEN APPROVED TO BE INCORPORATED BY THE DESIGNER.
5. DESIGNER RESERVES THE RIGHT TO REQUEST AN ADDITIONAL MOCK UP IF DESIGNER DEEMS THE WORK TO BE SUFFICIENTLY NON-CONFORMING.

G. CORROSION PROTECTION

1. CORROSION PROTECTION SYSTEM FOR ALL EXPOSED SURFACES OF THE ANCHOR BOXES AND SPACER BOXES SHALL BE AS FOLLOWS:
   a. SURFACE PREPARATION: ABRASIVE BLAST CLEAN TO SSPC SP5 (NACE No.1) SURFACE PROFILE 2 TO 3 MIL.
   b. PRIMER: ZINC RICH EPOXY COMPLYING WITH SSPC PAINT TYPE 20 AND GOVERNING SPECIFICATIONS HARBOR ITEM 446 SPECIAL PROTECTION SYSTEM DMS-8101 CLAUSE 8101.12.
2. CORROSION PROTECTION SYSTEM SHALL EXTEND ONTO THE CAST-IN SURFACES BY 2INCHES. PLATES RECEIVING CORROSION PROTECTION SYSTEM SHALL HAVE THEIR EDGES RADIUSED 1/8 INCH.
3. RECESS PIPES AND THE RECESS PIPES BAYONET FLANGES SHALL BE HOT DIP GALVANIZED IN ACCORDANCE WITH GOVERNING SPECIFICATIONS HARBOR ITEM 445 "GALVANIZING".

H. WORKING DRAWINGS

1. WORKING DRAWINGS SHALL BE SUBMITTED IN PDF AND CAD FORMAT. 3D MODEL FILE SHALL BE SUBMITTED.

I. INSTALLATION TOLERANCES

1. INSTALLATION TOLERANCES TO BE DEVELOPED.

This document is released for the purpose of REVIEW under the authority of Matthew L. Carter P.E. 133954 on 05/21/2021
IT IS NOT TO BE USED FOR CONSTRUCTION PURPOSES.

SCALES SHOWN FOR FULL SIZE DRAWINGS (22"x34")

NO.	DATE	REVISION	APRV

FLATIRON/DRAGADOS LLC

ARUP CFC

Texas Department of Transportation

US-181 HARBOR BRIDGE

MAIN SPAN
UPPER TOWER
STRUCTURAL STEEL NOTES

DESIGN	FED.RD. DIV.NO.	FEDERAL AID PROJECT NO.		HIGHWAY NO.
NT	X	(See Title Sheet)		US-181
GRAPHICS EF	STATE	DISTRICT	COUNTY	SHEET NO.
CHECK NT	TEXAS	CRP	NUECES	NHB 101
CHECK MC	CONTROL	SECTION	JOB	
	0101	06	095	

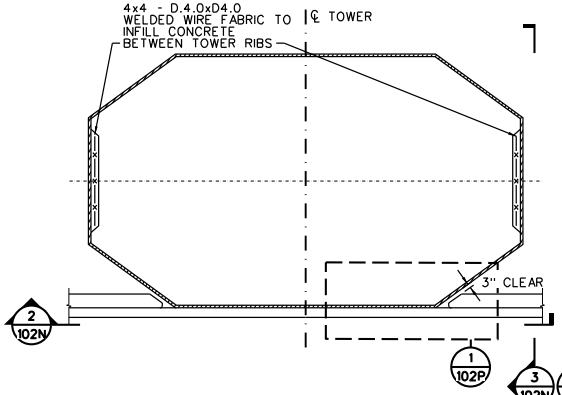

1 102N PLAN SECTION ON TOWER
1/4"=1'-0"

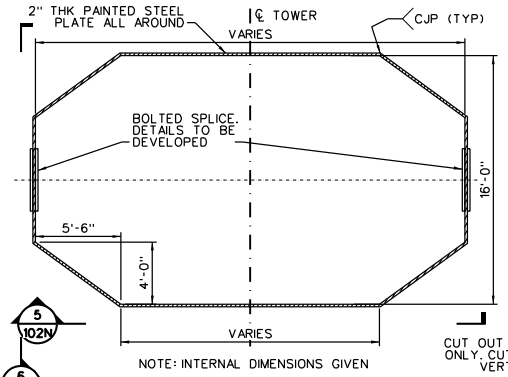

4 102N PLAN SECTION ON STEEL PLATE
1/4"=1'-0"

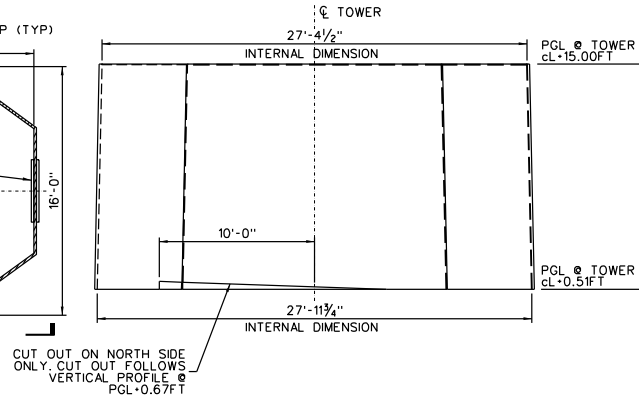

5 102N LONDITUDINAL ELEVATION ON STEEL PLATE
1/4"=1'-0"

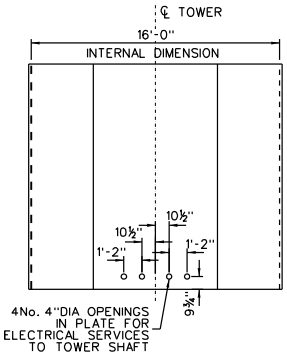

6 102N ELEVATION ON STEEL PLATE-MAIN SPAN SIDE
1/4"=1'-0"

This document is released for the purpose of REVIEW under the authority of Matthew L. Carter P.E. 133954 on 05/21/2021
IT IS NOT TO BE USED FOR CONSTRUCTION PURPOSES.

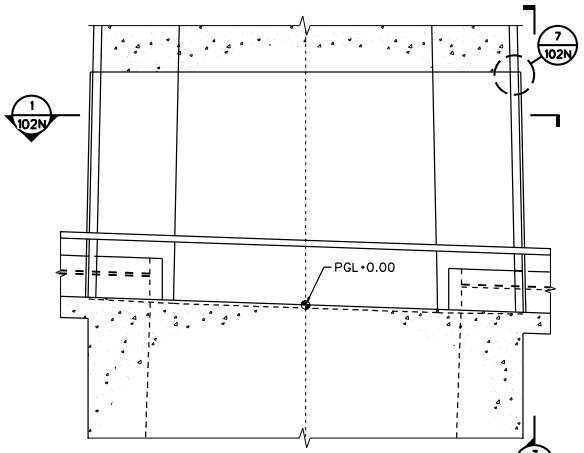

2 102N TOWER LONGITUDINAL ELEVATION
1/4"=1'-0"

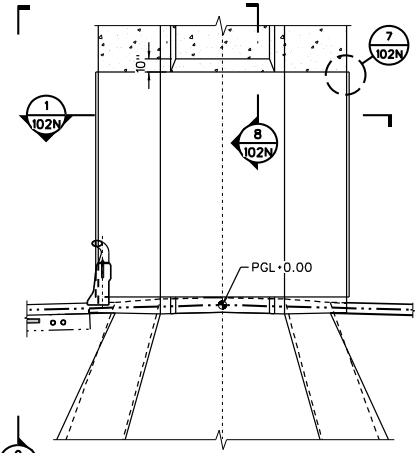

3 102N TOWER TRANSVERSE ELEVATION
1/4"=1'-0"

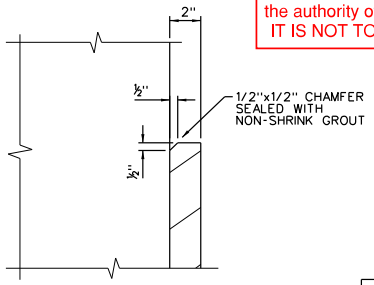

7 102N DETAIL
3"=1'-0"

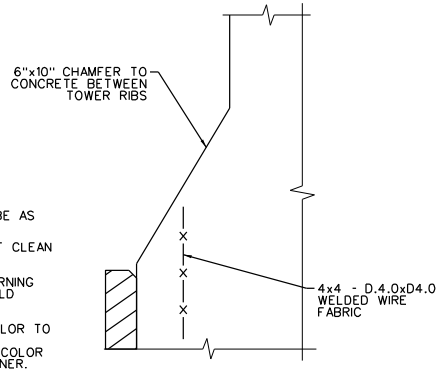

8 102N SECTION BETWEEN TOWER RIBS
3"=1'-0"

NOTES:

1. NORTH TOWER 1NT SHOWN. SOUTH TOWER 1ST SIMILAR.
2. ELEVATIONS SHOWN ARE RELATIVE TO PGL AT TOWER CENTERLINE:

   -1NT - PGL=211.99'
   -1ST - PGL=217.37'

3. ELECTRICAL SERVICES OPENINGS ARE NOT REQUIRED ON THE BACK SPAN SIDE OF THE TOWER AS THE SERVICES PENETRATE THE TOWER BELOW THE STEEL PLATE.

TOWER STEEL PLATE NOTES:

1. THE TOWER STEEL PLATE SHALL COMPLY WITH THE FOLLOWING SPECIFICATIONS AND THE STRUCTURAL STEEL NOTES ON SHEET NHB-101 AS MODIFIED BY THESE GENERAL NOTES.
2. PROVIDE STRUCTURAL STEEL IN ACCORDANCE WITH GOVERNING SPECIFICATIONS HARBOR ITEM 441 "STEEL STRUCTURES".
3. PROVIDE PAINT SYSTEM IN ACCORDANCE WITH GOVERNING SPECIFICATIONS HARBOR ITEM 446 "FIELD CLEANING AND PAINTING STEEL".
4. STEEL PLATE TO BE ASTM A709 GRADE 50.
5. ALL WELDING SHALL COMPLY WITH THE PROVISIONS OF AASHTO / AWS D1.5 BRIDGE WELDING CODE.
6. CORROSION PROTECTION SYSTEM SHALL BE AS FOLLOWS:

   a. SURFACE PREPARATION: ABRASIVE BLAST CLEAN TO SSPC SP10.
   b. PAINT SYSTEM: SYSTEM III-A PER GOVERNING SPECIFICATIONS HARBOR ITEM 446 "FIELD CLEANING AND PAINTING STEEL".
   c. FINAL URETHANE APPEARANCE COAT COLOR TO BE A CLOSE MATCH TO THE TOWER CONCRETE. CONTRACTOR TO FORWARD COLOR SWATCH FOR APPROVAL BY THE DESIGNER.

SCALES SHOWN FOR FULL SIZE DRAWINGS (22"x34")

NO.	DATE	REVISION	APRV

FLATIRON/DRAGADOS LLC
ARUP CFC
Texas Department of Transportation

US-181 HARBOR BRIDGE

MAIN SPAN
UPPER TOWER
TOWER STEEL PLATE DETAILS I

DESIGN KW	FED.RD. DIV.NO.	FEDERAL AID PROJECT NO.		HIGHWAY NO.
GRAPHICS TI	X	(See Title Sheet)		US-181
	STATE	DISTRICT	COUNTY	SHEET NO.
CHECK NT	TEXAS	CRP	NUECES	NHB 102N
	CONTROL	SECTION	JOB	
CHECK MC	0101	06	095	