Work Package	**RD09L Package 9: Landscaping**
Revision	**03**
Submittal Stage	**Released for Construction**
Date	**3/14/2023**

SHEET NO.	SHEET	HIGHWAY	SHEET TITLE	STATION NO.	STATION NO.
01	L000		INDEX OF DRAWINGS 1 OF 1		
02	GN01		LANDSCAPE GENERAL NOTES		
03	L101	I-37	SHEET ORIENTATION	STA 183+50	STA 80+00
04	L102	US 181	SHEET ORIENTATION	STA 1159+00	STA 1016+80
05	L103	SH 286	SHEET ORIENTATION	STA 1192+00	STA 1165+98
06	A001	I-37 & US 181	MASTER PLAN		
07		I-37	SUMMARY OF QUANTITIES 1 OF 4		
08		SH 286	SUMMARY OF QUANTITIES 2 OF 4		
09		US 181	SUMMARY OF QUANTITIES 3 OF 4		
10		COKE STREET/ SOUTH PARK	SUMMARY OF QUANTITIES 4 OF 4		
11	A101	I-37	LAYOUT 1 OF 11	STA 183+50	STA 173+60
12	A102	I-37	LAYOUT 2 OF 11	STA 173+60	STA 162+60
13	A103	I-37	LAYOUT 3 OF 11	STA 162+60	STA 152+00
14	A104	I-37	LAYOUT 4 OF 11	STA 152+00	STA 141+00
15	A105	I-37	LAYOUT 5 OF 11	STA 141+00	STA 132+00
16	A106	I-37	LAYOUT 6 OF 11	STA 132+00	STA 122+00
17	A107	I-37	LAYOUT 7 OF 11	STA 122+00	STA 112+50
18	A108	I-37	LAYOUT 8 OF 11	STA 112+50	STA 103+00
19	A109	I-37	LAYOUT 9 OF 11	STA 103+00	STA 93+50
20	A110	I-37	LAYOUT 10 OF 11	STA 93+50	STA 84+40
21	A111	I-37	LAYOUT 11 OF 11	STA 84+40	STA 80+00
22	A201	I-37	IRRIGATION PLAN 1 OF 11	STA 183+50	STA 173+60
23	A202	I-37	IRRIGATION PLAN 2 OF 11	STA 173+60	STA 162+60
24	A203	I-37	IRRIGATION PLAN 3 OF 11	STA 162+60	STA 152+00
25	A204	I-37	IRRIGATION PLAN 4 OF 11	STA 152+00	STA 141+00
26	A205	I-37	IRRIGATION PLAN 5 OF 11	STA 141+00	STA 132+00
27	A206	I-37	IRRIGATION PLAN 6 OF 11	STA 132+00	STA 122+00
28	A207	I-37	IRRIGATION PLAN 7 OF 11	STA 122+00	STA 112+50
29	A208	I-37	IRRIGATION PLAN 8 OF 11	STA 112+50	STA 103+00
30	A209	I-37	IRRIGATION PLAN 9 OF 11	STA 103+00	STA 93+50
31	A210	I-37	IRRIGATION PLAN 10 OF 11	STA 93+50	STA 84+40
32	A211	I-37	IRRIGATION PLAN 11 OF 11	STA 84+40	STA 80+00
33	A301	I-37	PLANTING PLAN 1 OF 11	STA 183+50	STA 173+60
34	A302	I-37	PLANTING PLAN 2 OF 11	STA 173+60	STA 162+60
35	A303	I-37	PLANTING PLAN 3 OF 11	STA 162+60	STA 152+00
36	A304	I-37	PLANTING PLAN 4 OF 11	STA 152+00	STA 141+00
37	A305	I-37	PLANTING PLAN 5 OF 11	STA 141+00	STA 132+00
38	A306	I-37	PLANTING PLAN 6 OF 11	STA 132+00	STA 122+00
39	A307	I-37	PLANTING PLAN 7 OF 11	STA 122+00	STA 112+50
40	A308	I-37	PLANTING PLAN 8 OF 11	STA 112+50	STA 103+00
41	A309	I-37	PLANTING PLAN 9 OF 11	STA 103+00	STA 93+50
42	A310	I-37	PLANTING PLAN 10 OF 11	STA 93+50	STA 84+40
43	A311	I-37	PLANTING PLAN 11 OF 11	STA 84+40	STA 80+00
44	B101	US 181	LAYOUT PLAN 1 OF 12	STA 1159+00	STA 1154+60
45	B102	US 181	LAYOUT PLAN 2 OF 12	STA 1154+60	STA 1150+48
46	B103	US 181	LAYOUT PLAN 3 OF 12	STA 1150+48	STA 1147+00
47	B104	US 181	LAYOUT PLAN 4 OF 12	STA 1147+00	STA 1142+40
48	B105	US 181	LAYOUT PLAN 5 OF 12	STA 1142+40	STA 1130+00
49	B106	US 181	LAYOUT PLAN 6 OF 12	STA 1075+00	STA 1071+00
50	B107	US 181	LAYOUT PLAN 7 OF 12	STA 1071+00	STA 1061+00
51	B108	US 181	LAYOUT PLAN 8 OF 12	STA 1061+00	STA 1051+00
52	B109	US 181	LAYOUT PLAN 9 OF 12	STA 1051+00	STA 1042+40
53	B110	US 181	LAYOUT PLAN 10 OF 12	STA 1042+40	STA 1032+00
54	B111	US 181	LAYOUT PLAN 11 OF 12	STA 1032+00	STA 1024+00
55	B112	US 181	LAYOUT PLAN 12 OF 12	STA 1024+00	STA 1016+80
56	B113	US 181	BURLESON LAYOUT PLAN		
57	B114	US 181	NORTH PARKING LOT LAYOUT PLAN		
58	B201	US 181	IRRIGATION PLAN 1 OF 12	STA 1159+00	STA 1154+60
59	B202	US 181	IRRIGATION PLAN 2 OF 12	STA 1154+60	STA 1150+48
60	B203	US 181	IRRIGATION PLAN 3 OF 12	STA 1150+48	STA 1147+00
61	B204	US 181	IRRIGATION PLAN 4 OF 12	STA 1147+00	STA 1142+40
62	B205	US 181	IRRIGATION PLAN 5 OF 12	STA 1142+40	STA 1130+00
63	B206	US 181	IRRIGATION PLAN 6 OF 12	STA 1075+00	STA 1071+00
64	B207	US 181	IRRIGATION PLAN 7 OF 12	STA 1071+00	STA 1061+00
65	B208	US 181	IRRIGATION PLAN 8 OF 12	STA 1061+00	STA 1051+00
66	B209	US 181	IRRIGATION PLAN 9 OF 12	STA 1051+00	STA 1042+40
67	B210	US 181	IRRIGATION PLAN 10 OF 12	STA 1042+40	STA 1032+00
68	B211	US 181	IRRIGATION PLAN 11 OF 12	STA 1032+00	STA 1024+00
69	B212	US 181	IRRIGATION PLAN 12 OF 12	STA 1024+00	STA 1016+80
70	B213	US 181	BURLESON IRRIGATION PLAN		
71	B214	US 181	NORTH PARKING LOT IRRIGATION PLAN		
72	B301	US 181	PLANTING PLAN 1 OF 12	STA 1159+00	STA 1154+60
73	B302	US 181	PLANTING PLAN 2 OF 12	STA 1154+60	STA 1150+48
74	B303	US 181	PLANTING PLAN 3 OF 12	STA 1150+48	STA 1147+00
75	B304	US 181	PLANTING PLAN 4 OF 12	STA 1147+00	STA 1142+40
76	B305	US 181	PLANTING PLAN 5 OF 12	STA 1142+40	STA 1130+00
77	B306	US 181	PLANTING PLAN 6 OF 12	STA 1075+00	STA 1071+00
78	B307	US 181	PLANTING PLAN 7 OF 12	STA 1071+00	STA 1061+00
79	B308	US 181	PLANTING PLAN 8 OF 12	STA 1061+00	STA 1051+00
80	B309	US 181	PLANTING PLAN 9 OF 12	STA 1051+00	STA 1042+40
81	B310	US 181	PLANTING PLAN 10 OF 12	STA 1042+40	STA 1032+00
82	B311	US 181	PLANTING PLAN 11 OF 12	STA 1032+00	STA 1024+00
83	B312	US 181	PLANTING PLAN 12 OF 12	STA 1024+00	STA 1016+80
84	B313	US 181	BURLESON PLANTING PLAN		
85	B314	US 181	NORTH PARKING LOT PLANTING PLAN		
86	C101	SH 286	IRRIGATION PLAN 1 OF 4	STA 1192+00	STA 1182+40
87	C102	SH 286	IRRIGATION PLAN 2 OF 4	STA 1182+40	STA 1172+60
88	C103	SH 286	IRRIGATION PLAN 3 OF 4	STA 1172+60	STA 1168+82
89	C104	SH 286	IRRIGATION PLAN 4 OF 4	STA 1168+82	STA 1165+98
90	C201	SH 286	LAYOUT PLAN 1 OF 4	STA 1192+00	STA 1182+40
91	C202	SH 286	LAYOUT PLAN 2 OF 4	STA 1182+40	STA 1172+60
92	C303	SH 286	LAYOUT PLAN 3 OF 4	STA 1172+60	STA 1168+82
93	C204	SH 286	LAYOUT PLAN 4 OF 4	STA 1168+82	STA 1165+98
94	C301	SH 286	PLANTING PLAN 1 OF 4	STA 1192+00	STA 1182+40
95	C302	SH 286	PLANTING PLAN 2 OF 4	STA 1182+40	STA 1172+60
96	C303	SH 286	PLANTING PLAN 3 OF 4	STA 1172+60	STA 1168+82
97	C304	SH 286	PLANTING PLAN 4 OF 4	STA 1168+82	STA 1165+98
98	D101	SOUTH PARK	MASTER PLAN		
99	D102	SOUTH PARK	OVERALL LAYOUT		
100	D103	SOUTH PARK	ENLARGED LAYOUT		
101	D201	SOUTH PARK	IRRIGATION PLAN		
102	D301	SOUTH PARK	OVERALL PLANTING		
103	D401	SOUTH PARK	OVERALL LIGHTING PLAN		
104	D402	SOUTH PARK	ENLARGED LIGHTING PLAN		
105	D501	SOUTH PARK	GRADING PLAN		
106	P101		FERTILIZER, SEED SOD, STRAW, COMPOST, AND WATER		
107	P102		TREE PROTECTION 1 OF 1		
108	P103		PLANTING ESTABLISHMENT 1 OF 7		
109	P104		PLANTING ESTABLISHMENT 2 OF 7		
110	P105		PLANTING ESTABLISHMENT 3 OF 7		
111	P106		PLANTING ESTABLISHMENT 4 OF 7		
112	P107		PLANTING ESTABLISHMENT 5 OF 7		
113	P108		PLANTING ESTABLISHMENT 6 OF 7		
114	P109		PLANTING ESTABLISHMENT 7 OF 7		
115	IM101	I-37	IRRIGATION MAINLINE DIAGRAM (I37 West of US181)		
116	IM102	I-37	MAINLINE DIAGRAM (I37 East of US181)		
117	IM103	US 286	MAINLINE DIAGRAM (US286 South of I37)		
118	I101		IRRIGATION DETAILS 1 OF 3		
119	I102		IRRIGATION DETAILS 2 OF 3		
120	I103		IRRIGATION DETAILS 3 OF 3		
121	LD101		CONSTRUCTION DETAILS 1 OF 10		
122	LD102		CONSTRUCTION DETAILS 2 OF 10		
123	LD103		CONSTRUCTION DETAILS 3 OF 10		
124	LD104		CONSTRUCTION DETAILS 4 OF 10		
125	LD105		CONSTRUCTION DETAILS 5 OF 10		
126	LD106		CONSTRUCTION DETAILS 6 OF 10		
127	LD107		CONSTRUCTION DETAILS 7 OF 10		
128	LD108		CONSTRUCTION DETAILS 8 OF 10		
129	LD109		CONSTRUCTION DETAILS 9 OF 10		
130	LD110		CONSTRUCTION DETAILS 10 OF 10		
131	SMD		SIGN MOUNTNG DETAILS SMALL ROADSIDE SIGNS		
132	F101		COKE ST. PLANTING PLAN 1 OF 4	STA 34+05	STA 29+57
133	F102		COKE ST. PLANTING PLAN 2 OF 4	STA 29+57	STA 25+55
134	F103		COKE ST. PLANTING PLAN 3 OF 4	STA 25+55	STA 21+70
135	F104		COKE ST. PLANTING PLAN 4 OF 4	STA 21+70	STA 19+50
136	F105		COKE ST. IRRIGATION PLAN 1 OF 4	STA 34+05	STA 29+57
137	F106		COKE ST. IRRIGATION PLAN 2 OF 4	STA 29+57	STA 25+55
138	F107		COKE ST. IRRIGATION PLAN 3 OF 4	STA 25+55	STA 21+70
139	F108		COKE ST. IRRIGATION PLAN 4 OF 4	STA 21+70	STA 19+50
140	SUP101		SHARED USE PATH AMENITIES 1 of 3		
141	SUP102		SHARED USE PATH AMENITIES 2 of 3		
142	SUP103		SHARED USE PATH AMENITIES 3 of 3		
143	DET01		FOUNDATION DETAILS 1 of 3		
144	DET02		FOUNDATION DETAILS 2 of 3		
145	DET03		FOUNDATION DETAILS 2 of 3		
146			SOUTH PARK CIVIC PLAZA – ILLUMINATION PLAN		
147			SOUTH PARK CIVIC PLAZA – ILLUMINATION DETAILS		
148	ED(1)-14		ELECTRICAL DETAILS CONDUITS & NOTES		
149	ED(3)-14		ELECTRICAL DETAILS CONDUCTORS		
150	ED(4)-14		ELECTRICAL DETAILS GROUND BOXES		
151	ED(5)-14		ELECTRICAL DETAILS SERVICE NOTES & DATA		
152	ED(6)-14		ELECTRICAL DETAILS SERVICE ENCLOSURE AND NOTES		
153	RD(1)-20		ROADWAY ILLUMINATION DETAILS		
154	RD(2)-20		ROADWAY ILLUMINATION DETAILS		
155	PED-18		PEDESTRIAN FACILITIES CURB RAMPS 1 OF 4		
156	PED-18		PEDESTRIAN FACILITIES CURB RAMPS 2 OF 4		
157	PED-18		PEDESTRIAN FACILITIES CURB RAMPS 3 OF 4		
158	PED-18		PEDESTRIAN FACILITIES CURB RAMPS 4 OF 4		
159	CCG-12		CONCRETE CURB AND GUTTER		
160	P-110		PALM TREE ESTABLISHMENT DETAIL		

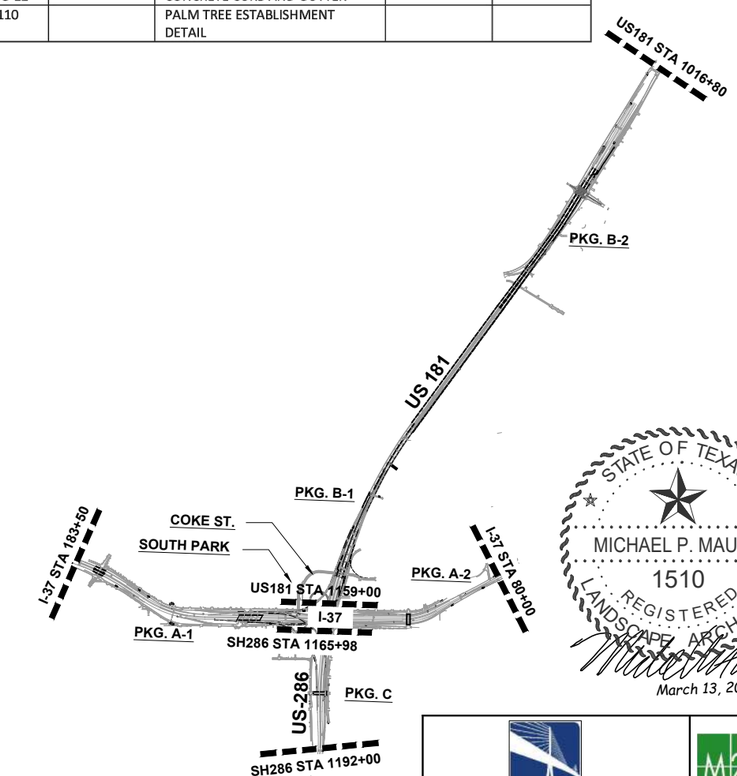

KEY MAP
NOT TO SCALE

STATE OF TEXAS
MICHAEL P. MAUER
1510
REGISTERED LANDSCAPE ARCHITECT
March 13, 2023

FLATIRON/DRAGADOS LLC

M2L Associates Inc.
Houston, Texas 77024
T: 713-722-8897 F: 713-722-8048
Landscape Architecture • Land Planning • Urban Design

Texas Department of Transportation ©2016

US 181 HARBOR BRIDGE

LANDSCAPE PLAN INDEX OF SHEET

SHEET 1 OF 1

DESIGN	FED.RD. DIV.NO.	FEDERAL AID PROJECT NO.		HIGHWAY NO.
GRAPHICS	X	(See Title Sheet)		
	STATE	DISTRICT	COUNTY	SHEET NO.
CHECK	TEXAS	CRP	NUECES	L000
CHECK	CONTROL	SECTION	JOB	
	0101	06	095	01

LANDSCAPE GRADING NOTES:

A. CONTRACTOR TO VERIFY THE LOCATION AND CONDITIONS OF ALL UNDERGROUND UTILITIES IN THE FIELD.

B. ALL LANDSCAPE BERMS SHALL BE GRADED IN A SMOOTH AND CONTINUOUS MANNER WITH NO ABRUPT GRADING TRANSITIONS TO EXISTING GRADE.

C. LANDSCAPE BERM ROUGH GRADING ELEVATIONS SHALL BE Ñ 1" BELOW FINISHED GRADE TO ALLOW FOR INSTALLATION OF FINISH MATERIALS AND TURF. ANY FILL OR LANDSCAPE SOILS NEEDED FOR IMPLEMENTATION OF LANDSCAPE WORK TO INCORPORATE ON-SITE TOPSOIL STIPPINGS. ON-SITE TOPSOIL FOR LANDSCAPE USE SHALL MEET TXDOT STANDARD SPECIFICATIONS 0160 REQUIREMENTS.

D. CONTRACTOR TO VERIFY EXISTING PROPERTY SPOT ELEVATIONS IN THE FIELD AND MAKE ADJUSTMENTS IN THE FINISHED GRADING ELEVATIONS AND SPOTS IN ORDER TO MAINTAIN POSITIVE DRAINAGE IN ALL CONDITIONS.

E. CONSTRUCTED PEDESTRIAN PAVEMENT AREAS SHALL MEET TEXAS ACCESSIBILITY STANDARDS AS APPLICABLE.

F. CONTRACTOR TO PROTECT AND PRESERVE ALL EXISTING TREES AND/OR SHRUBS DURING CONSTRUCTION RELATED ACTIVITIES BUT NOT DISTURBING GROUND UNDER THE DRIP LINES OF EXISTING PLANT MATERIAL AS APPLICABLE.

G. PREPARE PLANTING AREAS TO RECEIVE TURF, TREES, SHRUB, AND GROUNDCOVER PER TXDOT LANDSCAPE SPECIFICATIONS REQUIREMENTS.

LANDSCAPE GRADING AREAS MINIMUM SLOPE DRAINAGE TABLE

SLOPE	DRAINAGE AREAS	NOTES
1% - 2%	CONCENTRATED SWALES	(AS NOTED ON THE DWG'S)
1% - 5%	HARDSCAPE AREAS	(AS NOTED ON THE DWG'S)
2% MAX	CROSS SLOPES FOR SIDEWALKS	(AS NOTED ON THE DWG'S)
0.5% MIN	LANDSCAPE DRAINS	(AS NOTED ON THE DWG'S)

WATER FEATURE AT SOUTH PARK:

1. CONTRACTOR TO PROVIDE AND INSTALL A FULLY FUNCTIONING WATER FEATURE WITH SUPPLEMENTAL LIGHTING COMPLETE AND IN PLACE.

GENERAL LANDSCAPE NOTES:

A. CONTRACTOR TO LAYOUT ALL PLANTING BED LIMITS AND LOCATIONS OF ALL PROPOSED IMPROVEMENTS IN THE FIELD FOR APPROVAL OF LANDSCAPE ARCHITECT.

B. TREES SHALL BE PLANTED NO CLOSER THAN 30'-0" (AS MEASURED FROM CENTER OF TRUNK) FROM ANY ROAD BACK OF CURB. ALL SHRUBS SHALL BE A MINIMUM OF 15'-0" FROM BACK OF CURB.

C. CONTRACTOR SHALL FINE GRADE ALL LANDSCAPE AREAS.

D. WHERE INDICATED ON THE DRAWINGS AS TURF, THIS SHALL MEAN DRILL SEEDING OR CELLULOSE FIBER MULCH AS PER THE DRAWINGS. THE PLANTING DETAILS.

E. SEE PLANTING AND ESTABLISHMENT SHEETS 1 THRU 8 FOR PLANTING LEGEND, INSTALLATION DETAILS, REQUIREMENTS, AND NOTES.

F. CONTRACTOR TO PROVIDE MATERIAL SUBMITTALS TO THE OWNER AND, LANDSCAPE ARCHITECT CONSULTANT, AND TXDOT CONSTRUCTION MANAGER FOR APPROVAL PRIOR TO INSTALLATION OF ALL LANDSCAPE MATERIAL.

G. PROVIDE 4" THICK OF HARDWOOD BARK MULCH TOP DRESSING FOR NEW PLANTING BED AREAS. **SEE PLANTING AND ESTABLISHMENT SHEETS 1 THRU 8** FOR MULCHING SCHEDULE (Pay Under Item: 192-2012: Mulch.

H. PROVIDE GENERAL USE COMPOST FOR PLANTING AND TURF PREPARATION. 1" FOR TURF AREAS AND 4" FOR TREE AND SHRUB AREAS. SEE PLANTING AND ESTABLISHMENT SHEETS 1 THRU 8

I. REMOVE ALL WEEDS IN EXISTING AND NEW PLANTING AREAS AND MAINTENACE PATHS. **SEE PLANTING ESTABLISHMENT DETAILS AND SCHEDULE.**

J. PRUNE ALL PLANT MATERIAL AS NEEDED ACCORDING TO TXDOT STANDARDS. **SEE PLANTING ESTABLISHMENT DETAILS AND SCHEDULE.**

TURF WATERING REQUIREMENTS:

1. CONTRACTOR TO PROVIDE SUPPLEMENTAL HAND OR TRUCK WATERING FOR TURF AREAS NOT COVERED BY AN AUTOMATED IRRIGATION SYSTEM PER FERTILIZER, SEE, SOD, STRAW, COMPOST, AND WATERING (P101) SHEET 1 OF 1

GENERAL IRRIGATION NOTES:

A. ALL PIPE LOCATIONS AND IRRIGATION EQUIPMENT ARE SHOWN DIAGRAMMATICALLY. IT IS INTENDED THAT THE EQUIPMENT BE PLACED IN THE LANDSCAPE AREA OR AREAS DESIGNATED FOR SLEEVE AND BORE. CONTRACTOR SHALL MODIFY THE LAYOUT AS NECESSARY TO REFLECT THE ACTUAL SITE CONDITIONS.

B. CONTRACTOR TO PROVIDE ALL SLEEVES, BORINGS, AND LONG TAPS ACROSS SIDEWALKS AND ROADWAY PAVEMENTS.

C. CONTRACTOR TO PROVIDE AND INSTALL A FULLY FUNCTIONING IRRIGATION SYSTEM.

D. SEE IRRIGATION DETAIL SHEETS FOR IRRIGATION DETAILS AND NOTES.

E. IRRIGATION CONTRACTOR TO VERIFY THE CONDITIONS AND LOCATIONS OF WATER LINES TO BE TAPPED.

F. CONTRACTOR SHALL ADHERE TO ALL LOCAL REGULATIONS FOR IRRIGATION METERS AND TAPS TO CITY WATER LINES. KEEP ALL FITTINGS AT LEAST 18" APART.

G. ALL VALVES AT LEAST 4'-0" AWAY FROM THE EDGES OF THE TRAIL, SIDEWALK OR OTHER PAVED SURFACE.

H. CONTRACTOR TO CONNECT TO EXISTING PUBLIC WATER UTILITIES.

I. ALL SLEEVES, PIPE CASINGS, AND BORING UNDER TXDOT ROADWAYS SHALL ADHERE TO TXDOT STANDARDS .

J. CONTRACTOR TO VERIFY STATIC WATER PRESSURE AT IRRIGATION TAP IS A MINIMUM OF 50 PSI. NOTIFY LANDSCAPE ARCHITECT IF AVAILABLE PRESSURE IS BELOW REQUIRED THRESHOLD.

GENERAL SITE LIGHTING AND ELECTRICAL NOTES:

A. SITE LIGHTING AND ELECTRICAL NOTES SHALL ONLY APPLY AT THE SOUTH PARK.

B. CONTRACTOR TO COORDINATE WITH LOCAL UTILITY COMPANY FOR PROPOSED POWER DROP.

C. CONTRACTOR SHALL PAY FOR ALL MISCELLANEOUS FEES, EQUIPMENT, AND/OR LABOR FOR PROVIDING AND INSTALLING ELECTRICAL SERVICES, INCLUDING BUT NOT LIMITED TO SERVICE POLE, CONDUIT/CONDUCTORS, METERS, RACKS, POWER PANELS, DISCONNECT, PHOTO CELLS, PERMITS, INSTALLATION, AND FEES.

D. LAYOUT ALL PROPOSED ELECTRICAL EQUIPMENT AND FIXTURES ACCORDING TO LANDSCAPE DRAWINGS. NOTIFY OWNERS REPRESENTATIVE OF ANY DISCREPANCIES PRIOR TO INSTALLATION.

E. ALL ELECTRICAL EQUIPMENT AND FIXTURES SHALL BE SUBMITTED TO OWNERS REPRESENTATIVE FOR APPROVAL PRIOR TO PURCHASING AND INSTALLING.

GENERAL LAYOUT NOTES:

A. CONTRACTOR LAYOUT ALL PROPOSED LANDSCAPE FEATURES ACCORDING TO LANDSCAPE DRAWINGS. NOTIFY OWNERS REPRESENTATIVE OF ANY DISCREPANCIES PRIOR TO INSTALLATION.

B. THE CONTRACTOR SHALL NOTIFY THE LANDSCAPE ARCHITECT OR OWNER'S REPRESENTATIVE OF ANY LACK OF SURVEYING POINTS, OR DISCREPANCIES PRIOR TO INITIATING CONSTRUCTION.

C. CONTRACTOR SHALL BE RESPONSIBLE FOR VERIFYING THE LOCATIONS AND CONDITIONS OF EXISTING UTILITIES.

D. EXCAVATION, DISPOSAL OF CONSTRUCTION WASTES, AND TOPSOIL BACKFILL ACCORDING TO LOCAL REGULATORY REQUIREMENTS.

E. ALAMEDA TRELLIS:

1. CONTRACTOR TO COORDINATE THE RELOCATION AND REASSEMBLY OF THE ALAMEDA BRIDGE TRELLIS TO THE PROPOSED SOUTH PARK SITE.
2. CONTRACTOR SHALL NOTIFY OWNERS REPRESENTATIVE OF ANY DAMAGE, MISSING, PARTS, OR DEFICIENCIES PRIOR TO INSTALLING.
3. SEE STRUCTURAL DRAWINGS, STRUCT-DETAIL 01/02.

STATE OF TEXAS
MICHAEL P. MAUER
1510
REGISTERED
LANDSCAPE ARCHITECT
April 6, 2021

FLATIRON/DRAGADOS LLC

M2L Associates Inc.
Houston, Texas 77024
T: 713-722-8897 F: 713-722-8048
Landscape Architecture
Land Planning • Urban Design

Texas Department of Transportation ® 2016

US 181 HARBOR BRIDGE

LANDSCAPE GENERAL NOTES

SHEET 1 OF 1

DESIGN	FED.RD. DIV.NO.	FEDERAL AID PROJECT NO.		HIGHWAY NO.
GRAPHICS	X	(See Title Sheet)		
	STATE	DISTRICT	COUNTY	SHEET NO.
CHECK	TEXAS	CRP	NUECES	GN01
	CONTROL	SECTION	JOB	02
CHECK	0101	06	095	

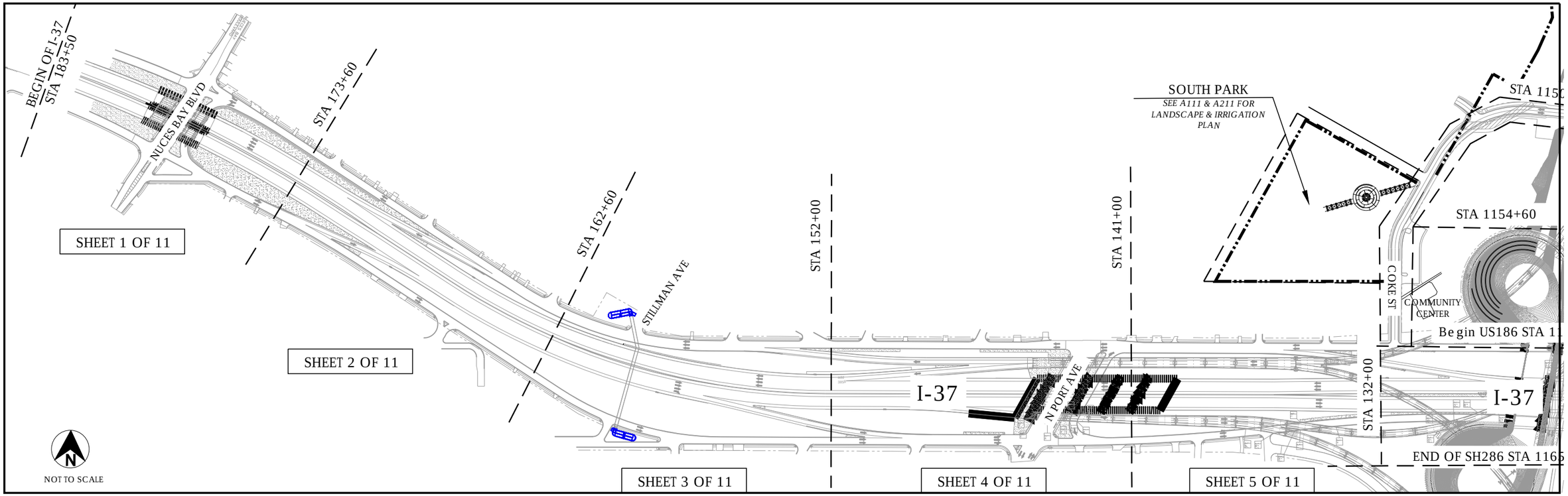

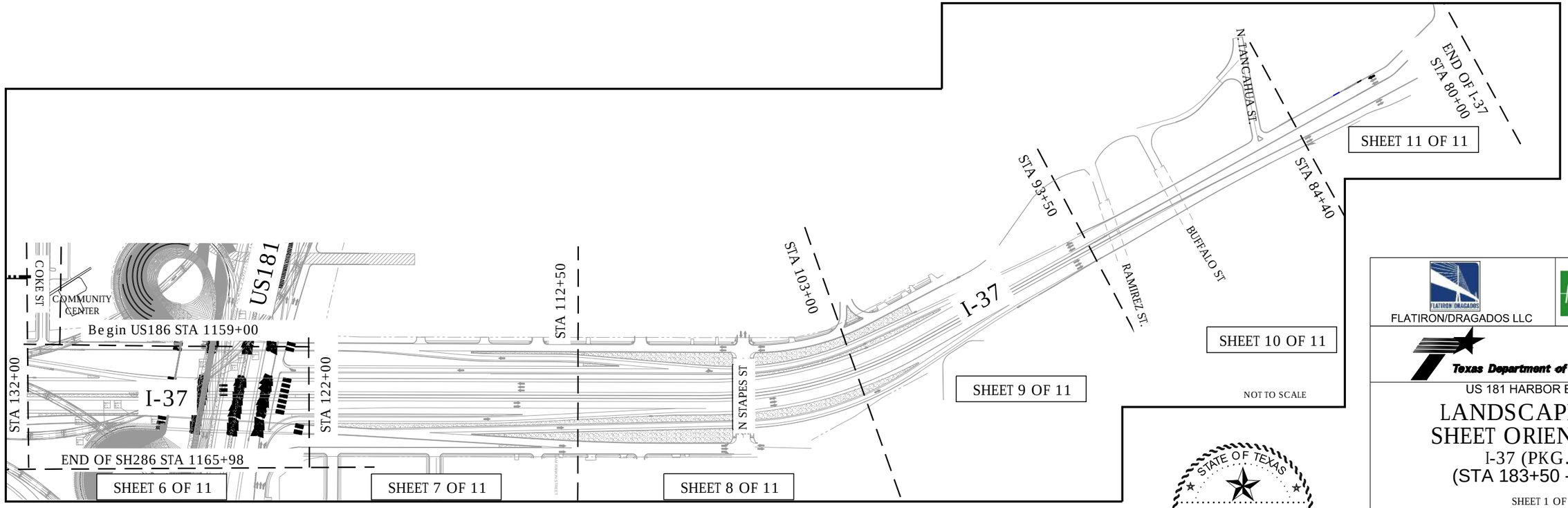

FLATIRON/DRAGADOS LLC

M2L Associates Inc.
Houston, Texas 77024
T: 713-722-8897 F: 713-722-8048
Landscape Architecture
Land Planning Urban Design

Texas Department of Transportation ® 2016

US 181 HARBOR BRIDGE

LANDSCAPE PLAN SHEET ORIENTATION

I-37 (PKG. 'A')
(STA 183+50 - 84+40)

SHEET 1 OF 3

STATE OF TEXAS
MICHAEL P. MAUER
1510
REGISTERED LANDSCAPE ARCHITECT
APRIL 6, 2021

DESIGN	FED.RD. DIV.NO.	FEDERAL AID PROJECT NO.		HIGHWAY NO.
GRAPHICS	X	(See Title Sheet)		
	STATE	DISTRICT	COUNTY	SHEET NO.
CHECK	TEXAS	CRP	NUECES	L101 03
	CONTROL	SECTION	JOB	
CHECK	0101	06	095	

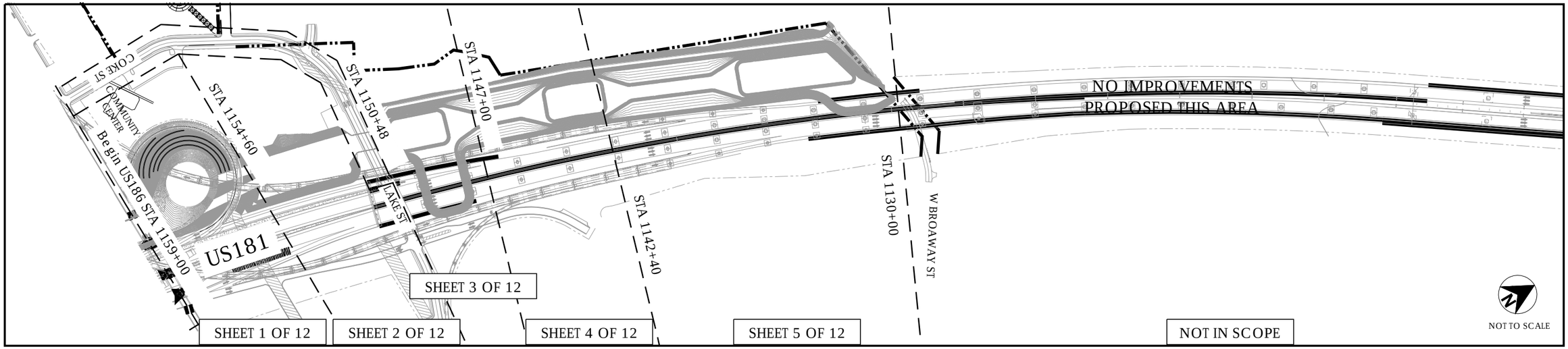

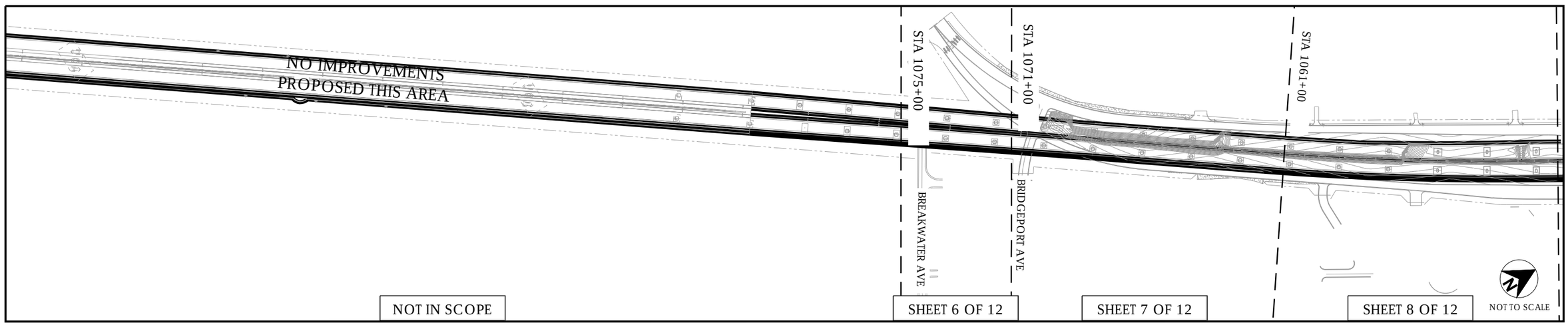

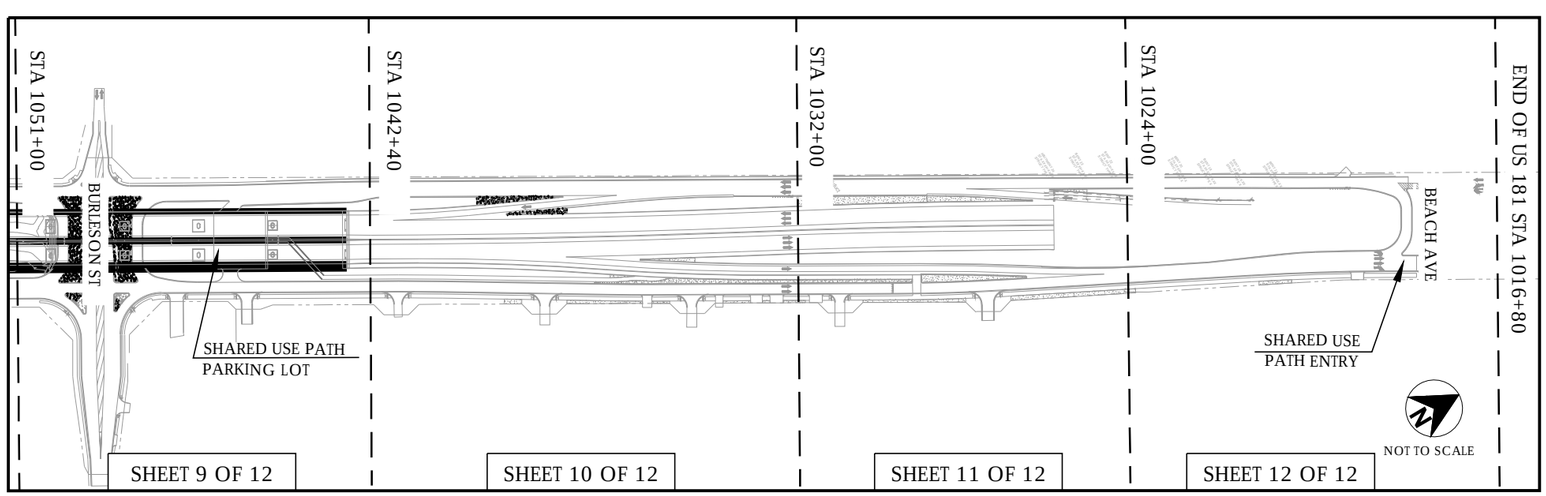

STATE OF TEXAS
MICHAEL P. MAUER
1510
REGISTERED LANDSCAPE ARCHITECT
APRIL 6, 2021

FLATIRON/DRAGADOS LLC

M2L Associates Inc.
Houston, Texas 77024
T: 713-722-8897 F: 713-722-8048
Landscape Architecture · Land Planning · Urban Design

Texas Department of Transportation ®2016

US 181 HARBOR BRIDGE

LANDSCAPE PLAN SHEET ORIENTATION

US 181 (PKG. 'B')
(STA 1159+00 -1016+80)

SHEET 2 OF 3

DESIGN	FED.RD. DIV.NO.	FEDERAL AID PROJECT NO.		HIGHWAY NO.
GRAPHICS	X	(See Title Sheet)		
	STATE	DISTRICT	COUNTY	SHEET NO.
CHECK	TEXAS	CRP	NUECES	L102
CHECK	CONTROL	SECTION	JOB	
	0101	06	095	04

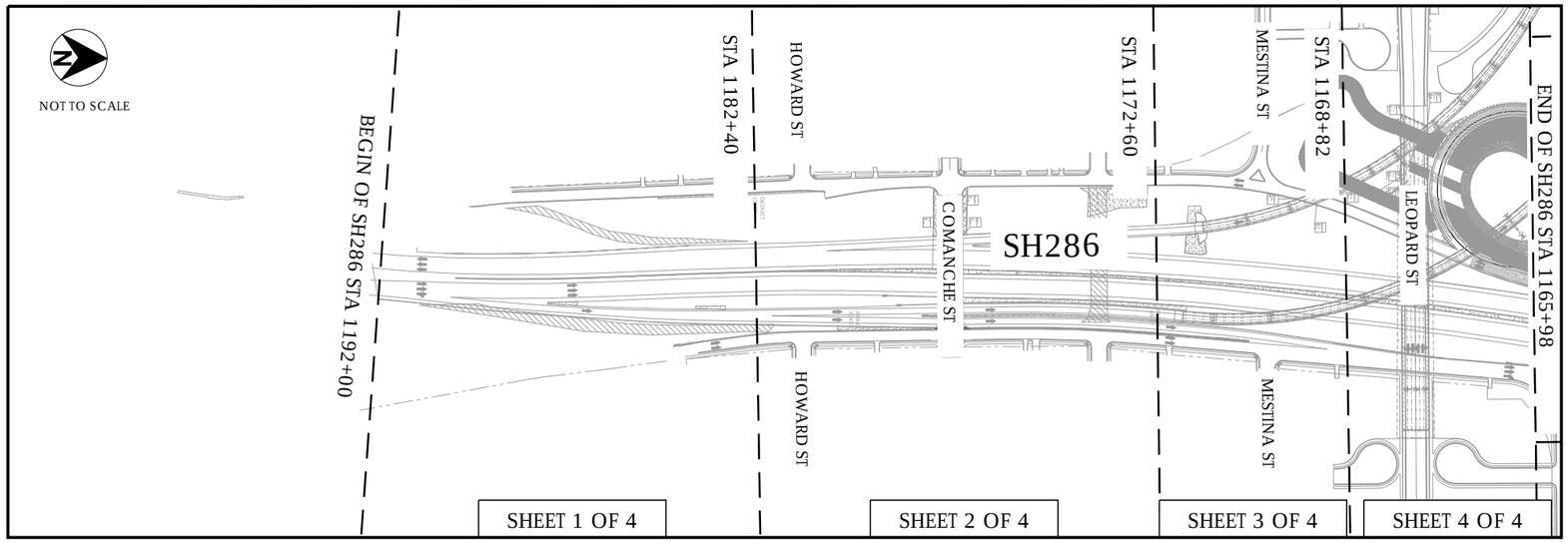

STATE OF TEXAS
MICHAEL P. MAUER
1510
REGISTERED LANDSCAPE ARCHITECT
APRIL 6, 2021

FLATIRON/DRAGADOS LLC

M2L Associates Inc.
Houston, Texas 77024
T: 713-722-8897 F: 713-722-8048
Landscape Architecture
Land Planning Urban Design

Texas Department of Transportation 2016

US 181 HARBOR BRIDGE

LANDSCAPE PLAN SHEET ORIENTATION

SH 286 (PKG 'C')
(STA 1192+00 -1165+98)

SHEET 3 OF 3

DESIGN	FED.RD. DIV.NO.	FEDERAL AID PROJECT NO.		HIGHWAY NO.
	X	(See Title Sheet)		
GRAPHICS	STATE	DISTRICT	COUNTY	SHEET NO.
CHECK	TEXAS	CRP	NUECES	L103
	CONTROL	SECTION	JOB	
CHECK	0101	06	095	05

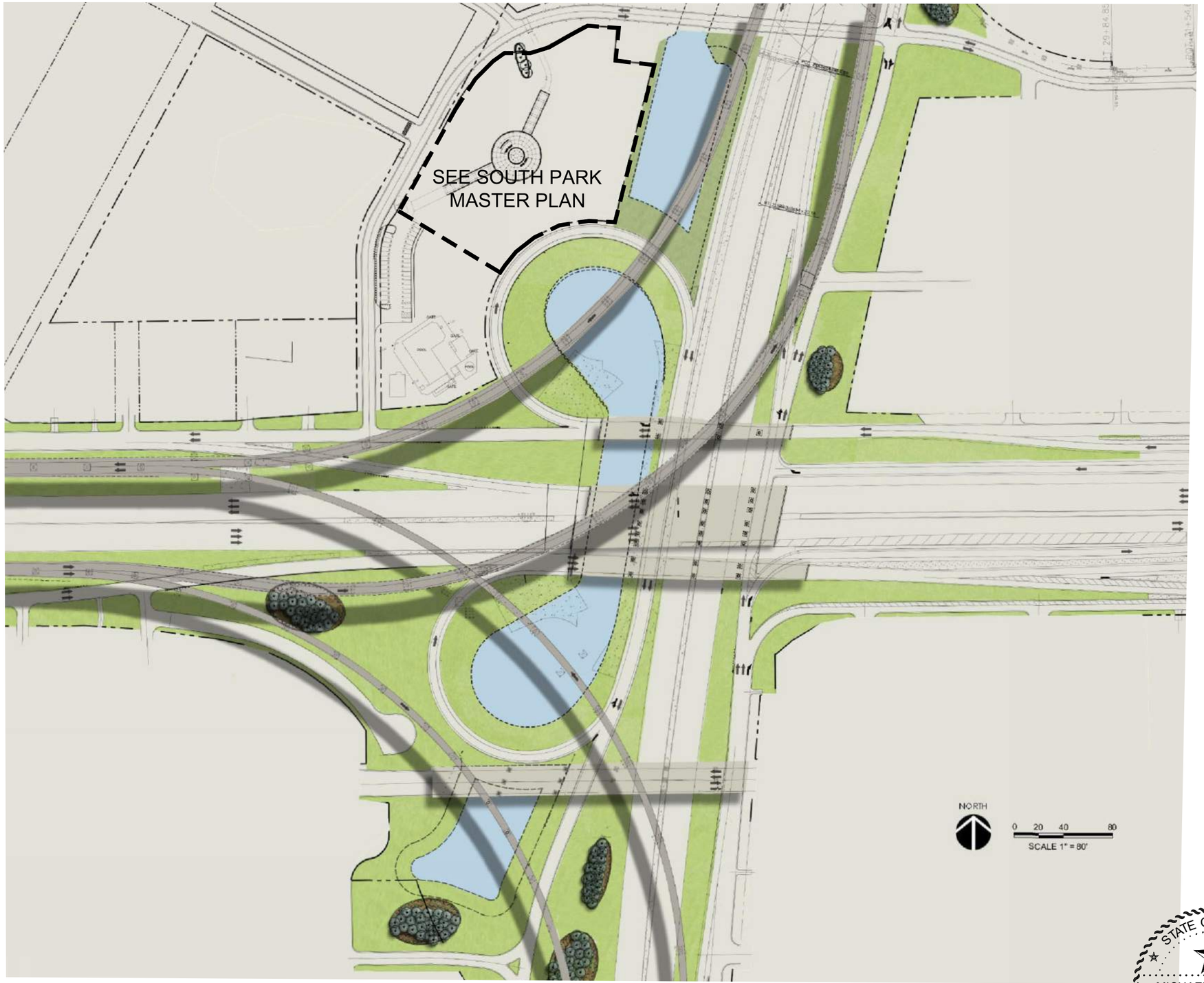

NOTE: See Landscape Drawings for Final Planting Plans

STATE OF TEXAS
MICHAEL P. MAUER
1510
REGISTERED
LANDSCAPE ARCHITECT
MAR 13, 2023

FLATIRON/DRAGADOS LLC

M2L Associates Inc.
Houston, Texas 77024
T: 713-722-8897 F: 713-722-8048
•Landscape Architecture•
•Land Planning•Urban Design•

Texas Department of Transportation ©2016

US 181 HARBOR BRIDGE

I 37 AND US 181 MASTER PLAN

SHEET 1 OF 1

DESIGN	FED.RD. DIV.NO.	FEDERAL AID PROJECT NO.		HIGHWAY NO.
GRAPHICS	X	(See Title Sheet)		
	STATE	DISTRICT	COUNTY	SHEET NO.
CHECK	TEXAS	CRP	NUECES	A001
CHECK	CONTROL	SECTION	JOB	06
	0101	06	095	

HARDSCAPE

ITEM NUMBER:	0529-6033	0528-6002	0528-6003	0528-6004	0528-6005	0531-6001	0636-6001	0636-6002	0668-6096	0678-6028	0668-6094	0678-6026	0666-6180	0678-6006	1002-6002	1002-6003	1002-6004	1002-6005	1002-6006	1002-6007	1002-6008	1002-6009
DESCRIPTION:	CONCRETE CURB (LANDSCAPE)	COLORED TEXTURED CONC (6") (TY 1) *North Parking*	COLORED TEXTURED CONC (6") (TY 2) *SUP Trail Head*	COLORED TEXTURED CONC (6") (TY 3) *band at parking*	COLORED TEXTURED CONC (6") (TY 4) *South Park*	CONC SIDEWALKS (4") *South Park*	ALUMINUM SIGNS (TYPE A) SUP Sign	ALUMINUM SIGNS (TYPE G) *Trail Crossing*	PREFAB PAV MARK TY C(W) (BIKE SYMBOL) *At SUP Entry*	PV SURF PREP FOR MRK (BIKE SYMBOL) *At SUP Entry*	PREFAB PAV MARK TY C(W) (BIKE ARROW) *At SUP Entry*	PV SURF PREP FOR MRK (BIKE ARROW) *At SUP Entry*	FLL PAV MARK TY II (W) (12") *Cont Crosswalk*	PAV SURF PREP FOR MARK (12") *Cont Crosswalk*	LANDSCAPE AMENITY TY 1 Recyled Benches	LANDSCAPE AMENITY TY 2 Wind Turbine	LANDSCAPE AMENITY TY 3 Bench/Belvedere	LANDSCAPE AMENITY TY 4 Bike Rack	LANDSCAPE AMENITY TY 5 Trail Map	LANDSCAPE AMENITY TY 6 Bike rack/Belv	LANDSCAPE AMENITY TY 7 Trellis at Park	LANDSCAPE AMENITY TY 8 Chime at Park
UNIT:	LF	SY	SY	SY	SY	SY	EA	EA	EA	EA	EA	EA	LF	LF	EA	EA	EA	EA	EA	EA	SY	EA
STATION/SHEET																						
A1 - I37 WEST																						
183+50 - 173+60 1	0	0	0	0	0	0	0	0	0	0	0	0	0	0	0	0	0	0	0	0	0	0
173+60 - 162+60 1	345	0	0	0	0	0	0	0	0	0	0	0	0	0	0	0	0	0	0	0	0	0
162+60 - 152+00 1	585	0	0	0	0	0	0	0	0	0	0	0	0	0	0	0	0	0	0	0	0	0
152+00 - 141+00 1	800	0	0	0	0	0	0	0	0	0	0	0	0	0	0	0	0	0	0	0	0	0
141+00 - 132+00 1	365	0	0	0	0	0	0	0	0	0	0	0	0	0	0	0	0	0	0	0	0	0
132+00 - 122+00 1	0	0	0	0	0	0	0	0	0	0	0	0	0	0	0	0	0	0	0	0	0	0
Subtotal A1 West	**2,095**	**0**	**0**	**0**	**0**	**0**	**0**	**0**	**0**	**0**	**0**	**0**	**0**	**0**	**0**	**0**	**0**	**0**	**0**	**0**	**0**	**0**
A2 - I37 EAST																						
122+00 - 112+50 1	-	0	0	0	0	0	0	0	0	0	0	0	0	0	0	0	0	0	0	0	0	0
112+50 - 103+00 1	325	0	0	0	0	0	0	0	0	0	0	0	0	0	0	0	0	0	0	0	0	0
103+00 - 93+50 1	1,200	0	0	0	0	0	0	0	0	0	0	0	0	0	0	0	0	0	0	0	0	0
93+50 - 84+40 1	1,530	0	0	0	0	0	0	0	0	0	0	0	0	0	0	0	0	0	0	0	0	0
84+40 - 80+00 1	-	0	0	0	0	0	0	0	0	0	0	0	0	0	0	0	0	0	0	0	0	0
Subtotal A2 East	**3,055**	**0**	**0**	**0**	**0**	**0**	**0**	**0**	**0**	**0**	**0**	**0**	**0**	**0**	**0**	**0**	**0**	**0**	**0**	**0**	**0**	**0**
TOTAL:	**5,150**	**-**	**-**	**-**	**-**	**-**	**-**	**-**	**-**	**-**	**-**	**-**	**-**	**-**	**-**	**-**	**-**	**-**	**-**	**-**	**-**	**-**

SOFTSCAPE

ITEM NUMBER:	0161-6012	0166-6001	0164-6066	0164-6057	0192-6012	0192-6063 *Trees*	0192-6065 *Shrubs/GC*	0192-6066 *Broad*	0192-6002	0192-6004	0192-6026	1006-6001 *Tree Mych*	1006-6002 *Turf Humate*	1006-6003 *Trees*	1006-6004 *Shrubs/GC*
DESCRIPTION:	GENERAL USE COMPOST Depth per Details	FERTILIZER	DRILL SEEDING (PERM) TYPE A	CELL FBR MULCH SEED (PERM) TYPE B	MULCH	PLANT BED PREP (TYPE I)	PLANT BED PREP (TYPE III)	PLANT BED PREP (TYPE IV)	PLANT MATERIAL 1 GALLON) (SHRUB)	PLANT MATERIAL 3 GALLON) (SHRUB)	PLANT MATERIAL (65 GALLON) (TREE)	LANDSCAPE SOIL AMENDMENT (TYPE I)	LANDSCAPE SOIL AMENDMENT (TYPE II)	LANDSCAPE SOIL AMENDMENT (TYPE III)	LANDSCAPE SOIL AMENDMENT (TYPE IV)
UNIT:	CY	AC	SY	SY	CY	SY	SY	SY	EA	EA	EA	EA	SY	SY	SY
STATION/SHEET															
A1 - I37 WEST															
183+50 - 173+60 1	62	1.4	2,229	-	-	-	-	2,229	-	-	-	-	2,229	-	-
173+60 - 162+60 1	240	4.0	6,715	-	115	-	458	6,715	-	500	-	-	6,715	-	1,374
162+60 - 152+00 1	713	11.2	19,715	-	500	770	760	19,715	-	600	31	31	19,715	31	2,280
152+00 - 141+00 1	514	10.5	15,043	-	195	-	790	15,472	-	1,400	-	-	15,472	-	2,370
141+00 - 132+00 1	672	12.5	18,220	-	346	925	460	18,220	-	500	18	18	18,220	18	1,380
132+00 - 122+00 1	866	16.5	21,214	6,833	335	-	-	28,047	-	-	-	-	28,047	-	-
Subtotal A1 West	**3,067**	**56.1**	**83,136**	**6,833**	**1,491**	**1,695**	**2,468**	**90,398**	**-**	**3,000**	**49**	**49**	**90,398**	**49**	**7,404**
A2 - I37 EAST															
122+00 - 112+50 1	125	2.8	4,520	-	-	-	-	4,520	-	-	-	-	4,520	-	-
112+50 - 103+00 1	418	7.9	12,980	-	146	420	165	12,980	-	300	13	13	12,980	13	495
103+00 - 93+50 1	854	8.0	15,685	-	925	2,678	1,020	15,685	-	1,100	77	77	15,685	77	3,005
93+50 - 84+40 1	1,343	18.9	32,779	-	1,091	2,875	1,490	32,779	-	1,400	78	78	32,779	78	4,470
84+40 - 80+00 1	453	9.8	16,390	-	-	-	-	16,390	-	-	-	-	16,390	-	-
Subtotal A2 East	**3,193**	**47.4**	**82,354**	**-**	**2,162**	**5,973**	**2,675**	**82,354**	**-**	**2,800**	**168**	**168**	**82,354**	**168**	**7,970**
TOTAL:	**6,260**	**103.5**	**165,490**	**6,833**	**3,653**	**7,668**	**5,143**	**172,752**	**-**	**5,800**	**217**	**217**	**172,752**	**217**	**15,374**

ITEM NUMBER:	0168-6001	0162-6003
DESCRIPTION:	VEGETATIVE WATERING	STRAW OR HAY MULCH
UNIT:	MG	SY
STATION/SHEET		
A1 - I37 WEST		
183+50 - 173+60 1	55.3	2,229
173+60 - 162+60 1	166.5	6,715
162+60 - 152+00 1	988.8	19,715
152+00 - 141+00 1	383.6	15,043
141+00 - 132+00 1	451.7	18,220
132+00 - 122+00 1	669.7	21,214
Subtotal A1 West	**2,715.6**	**83,136**
A2 - I37 EAST		
122+00 - 112+50 1	224.1	4,520
112+50 - 103+00 1	321.8	12,980
103+00 - 93+50 1	660.0	15,685
93+50 - 84+40 1	1,625.1	32,779
84+40 - 80+00 1	406.4	16,390
Subtotal A2 East	**3,237.4**	**82,354**
TOTAL:	**5,953.0**	**165,490**

STATE OF TEXAS
MICHAEL P. MAUER
1510
REGISTERED
LANDSCAPE ARCHITECT
April 6, 2021

FLATIRON/DRAGADOS LLC

M2L Associates Inc.
Houston, Texas 77024
T: 713-722-8897 F: 713-722-8048
Landscape Architecture
Land Planning Urban Design

Texas Department of Transportation ® 2016

US 181 HARBOR BRIDGE

SUMMARY OF QUANTITIES I - 37(A1 & A2)

SHEET 1 OF 4

DESIGN	FED.RD. DIV.NO.	FEDERAL AID PROJECT NO.		HIGHWAY NO.
GRAPHICS	X	(See Title Sheet)		
	STATE	DISTRICT	COUNTY	SHEET NO.
CHECK	TEXAS	CRP	NUECES	
CHECK	CONTROL	SECTION	JOB	
	0101	06	095	07

HARDSCAPE

ITEM NUMBER:	0529-6033	0528-6002	0528-6003	0528-6004	0528-6005	0531-6001	0636-6001	0636-6002	0668-6096	0678-6028	0668-6094	0678-6026	0666-6180	0678-6006	1002-6002	1002-6003	1002-6004	1002-6005	1002-6006	1002-6007	1002-6008	1002-6009	1002-6016
DESCRIPTION:	CONCRETE CURB (LANDSCAPE)	COLORED TEXTURED CONC (6") (TY 1) *North Parking*	COLORED TEXTURED CONC (6") (TY 2) *SUP Trail Head*	COLORED TEXTURED CONC (6") (TY 3) *band at parking*	COLORED TEXTURED CONC (6") (TY 4) *South Park*	CONC SIDEWALKS (4") *South Park*	ALUMINUM SIGNS (TYPE A) *SUP Sign*	ALUMINUM SIGNS (TYPE G) *Trail Crossing*	PREFAB PAV MARK TY C(W) (BIKE SYMBOL) *At SUP Entry*	PV SURF PREP FOR MRK (BIKE SYMBOL) *At SUP Entry*	PREFAB PAV MARK TY C(W) (BIKE ARROW) *At SUP Entry*	PV SURF PREP FOR MRK (BIKE ARROW) *At SUP Entry*	FLL PAV MARK TY II (W) (12") *Cont Crosswalk*	PAV SURF PREP FOR MARK (12") *Cont Crosswalk*	LANDSCAPE AMENITY TY 1 Recycled Benches	LANDSCAPE AMENITY TY 2 Wind Turbine	LANDSCAPE AMENITY TY 3 Bench/Belvedere	LANDSCAPE AMENITY TY 4 Bike Rack	LANDSCAPE AMENITY TY 5 Trail Map	LANDSCAPE AMENITY TY 6 Bike rack/Belv	LANDSCAPE AMENITY TY 7 Trellis at Park	LANDSCAPE AMENITY TY 8 Chime at Park	LANDSCAPE AMENITY TY 15 Informal Sign
UNIT:	LF	SY	SY	SY	SY	SY	EA	EA	EA	EA	EA	EA	LF	LF	EA	EA	EA	EA	EA	EA	SY	EA	EA
STATION/SHEET																							
B1 - US 181 SOUTH																							
1159+00 - 1154+60 1	330	0	0	0	0	0	0	0	0	0	0	0	0	0	0	0	0	0	0	0	0	0	0
1150+48 - 1154+60 1	275	0	0	0	0	0	0	0	0	0	0	0	0	0	0	0	0	0	0	0	0	0	0
1147+00 - 1150+48 1	500	0	0	0	0	0	0	0	0	0	0	0	0	0	0	0	0	0	0	0	0	0	0
1147+00 - 1142+40 1	0	0	0	0	0	0	0	0	0	0	0	0	0	0	0	0	0	0	0	0	0	0	0
1142+40 - 1130+00 1	0	0	0	0	0	0	0	0	0	0	0	0	0	0	0	0	0	0	0	0	0	0	0
Subtotal B1 South	**1105**	**0**	**0**	**0**	**0**	**0**	**0**	**0**	**0**	**0**	**0**	**0**	**0**	**0**	**0**	**0**	**0**	**0**	**0**	**0**	**0**	**0**	**0**
B2 - US 181 NORTH																							
1075+75 - 1071+00 1	0	0	0	0	0	50	0	0	1	1	1	1	0	0	0	0	0	0	1	0	0	0	1
1071+00 - 1061+00 1	0	0	0	0	0	0	0	0	0	0	0	0	0	0	0	0	0	0	0	0	0	0	0
1061+00 - 1051+00 1	0	0	0	0	0	0	0	0	0	0	0	0	0	0	0	0	0	0	0	0	0	0	0
1051+00 - 1042+00 1	142	0	0	0	0	60	2	0	1	1	1	1	0	0	0	0	0	6	1	0	0	0	0
1042+00 - 1032+00 1		0	0	0	0	0	0	2	1	1	1	1	0	0	0	0	0	0	0	0	0	0	0
1032+00 - 1024+00 1	0	0	0	0	0	50	0	1	1	1	1	1	120	120	0	0	0	0	1	0	0	0	0
1024+00 - 1016+00 1	0	0	0	0	0	0	0	0	0	0	0	0	0	0	0	0	0	0	0	0	0	0	0
Subtotal B2 North	**142**	**0**	**0**	**0**	**0**	**160**	**2**	**3**	**4**	**4**	**4**	**4**	**120**	**120**	**0**	**0**	**0**	**6**	**3**	**0**	**0**	**0**	**1**
TOTAL:	**1,247.00**	**-**	**-**	**-**	**-**	**160.00**	**2.00**	**3.00**	**4.00**	**4.00**	**4.00**	**4.00**	**120.00**	**120.00**	**-**	**-**	**-**	**6.00**	**3.00**	**-**	**-**	**-**	**1.00**

SOFTSCAPE

ITEM NUMBER:	0161-6012	0166-6001	0164-6066	0164-6057	0192-6012	0192-6063	0192-6065	0192-6066	0192-6002	0192-6004	0192-6026	1006-6001	1006-6002	1006-6003	1006-6004
						Trees	*Shrubs/GC*	*Broad*				*Tree Mych*	*Turf Humate*	*Trees*	*Shrubs/GC*
DESCRIPTION:	GENERAL USE COMPOST (1")	FERTILIZER	DRILL SEEDING (PERM) TYPE A	CELL FBR MULCH SEED (PERM) TYPE B	MULCH	PLANT BED PREP (TYPE I)	PLANT BED PREP (TYPE III)	PLANT BED PREP (TYPE IV)	PLANT MATERIAL 1 GALLON) (SHRUB)	PLANT MATERIAL 3 GALLON) (SHRUB)	PLANT MATERIAL (65 GALLON) (TREE)	LANDSCAPE SOIL AMENDMENT (TYPE I)	LANDSCAPE SOIL AMENDMENT (TYPE II)	LANDSCAPE SOIL AMENDMENT (TYPE III)	LANDSCAPE SOIL AMENDMENT (TYPE IV)
UNIT:	CY	AC	SY	SY	CY	SY	SY	SY	EA	EA	EA	EA	SY	SY	SY
STATION/SHEET															
B1 - US 181 SOUTH															
1159+00 - 1154+60 1	660	10	7,233	10,100	166	510	160	17,333	-	150	20	20	17,333	20	480
1150+48 - 1154+60 1	308	6.9	6,270	5,055	75	440	0	11,240	-	-	12	12	11,240	12	-
1147+00 - 1150+48 1	384	8.1	10,023	3,890	180	740	160	13,913	-	150	30	30	13,913	30	480
1142+40 - 1147+00 1	624	14	15,580	6,975	-	0	0	22,555	-	-	-	-	22,555	-	-
1142+40 - 1130+00 1	1,230	26.5	27,910	14,780	-	0	0	42,690	-	-	-	-	42,690	-	-
Subtotal B1 South	**3,206**	**65.5**	**67,016**	**40,800**	**421**	**1690**	**320**	**107,731**	**-**	**300**	**62**	**62**	**107,731**	**62**	**960**
B2 - US 181 NORTH															
1075+00 - 1071+00 1	321	7.2	11,628	-	-	0	0	11,628	-	-	-	-	11,628	-	-
1071+00 - 1061+00 1	495	10.5	4,650	12,815	-	0	0	17,915	-	-	-	-	17,915	-	-
1061+00 - 1051+00 1	656	14.7	4,055	19,680	-	0	0	23,735		-	-	-	23,735	-	-
1051+00 - 1042+00 1	253	5.6	7,422	1,722	30	0	180	9,144	-	200	-	-	9,144	-	540
1042+00 - 1032+00 1	161	4.0	5,800	-	-	0	0	5,800	-	-	-	-	5,800	-	-
1032+00 - 1024+00 1	131	2.9	4,750	-	-	0	0	4,750	-	-	-	-	4,750	-	-
1024+00 - 1016+80 1	122	2.8	4,406	-	-	0	0	4,406	-	-	-	-	4,406	-	-
Subtotal B2 North	**2,139**	**47.7**	**42,711**	**34,217**	**30**	**0**	**180**	**77,378**	**-**	**200**	**-**	**-**	**77,378**	**-**	**540**
TOTAL:	**5,345**	**113.2**	**109,727**	**75,017**	**451**	**1,690**	**500**	**185,109**	**-**	**500**	**62**	**62**	**185,109**	**62**	**1,500**

LOOSE AGGREGATE FOR GROUND COVER

ITEM NUMBER:	1005-6001	1005-6002	1005-6003
DESCRIPTION:	LOOSE AGGREGATE FOR GROUND COVER (TY I) 1-1/2" TO 2"	LOOSE AGGREGATE FOR GROUND COVER (TY II) 3" TO 5"	LOOSE AGGREGATE FOR GROUND COVER (TY III) 12" TO 18""
UNIT:	SY	SY	SY
STATION/SHEET			
B1 - US 181 SOUTH			
1159+00 - 1154+60 1	0	0	0
1150+48 - 1154+60 1	0	0	0
1147+00 - 1150+48 1	0	0	0
1142+40 - 1147+00 1	0	0	0
1142+40 - 1130+00 1	0	0	0
Subtotal B1 South	**0**	**0**	**0**
B2 - US 181 NORTH			
1075+00 - 1071+00 1	0	0	0
1071+00 - 1061+00 1	0	0	0
1061+00 - 1051+00 1	0	0	0
1051+00 - 1042+00 1	105	840	1165
1042+00 - 1032+00 1	0	0	0
1032+00 - 1024+00 1	0	0	0
1024+00 - 1016+80 1	0	0	0
Subtotal B2 North	**105**	**840**	**1165**
TOTAL:	**105.00**	**840.00**	**1,165.00**

VEGETATIVE WATERING

ITEM NUMBER:	0168-6001	0162-6003
DESCRIPTION:	VEGETATIVE WATERING	STRAW OR HAY MULCH
UNIT:	MG	SY
STATION/SHEET		
B1 - US 181 SOUTH		
1159+00 - 1154+60	358.2	7,233
1154+60 - 1150+48	232.8	6,270
1147+00 - 1150+48	345.0	10,023
1142+40 - 1147+00	559.4	15,580
1142+40 - 1130+00	1058.4	27,910
Subtotal B1 South	**2553.8**	**67,016**
B2 - US 181 NORTH		
1075+00 - 1071+00	288.1	11,628
1071+00 - 1061+00	370.1	4,650
1061+00 - 1051+00	588.5	4,055
1051+00 - 1042+00	154.4	7,422
1042+00 - 1032+00	120.0	5,800
1032+00 - 1024+00	98.5	4,750
1024+00 - 1016+80	109.2	4,406
Subtotal B2 North	**1728.8**	**42,711**
TOTAL:	**4,282.6**	**109,727**

STATE OF TEXAS
MICHAEL P. MAUER
1510
REGISTERED
LANDSCAPE ARCHITECT
SEP 2, 2022

FLATIRON/DRAGADOS LLC

M2L Associates Inc.
Houston, Texas 77024
T: 713-722-8897 F: 713-722-8048
Landscape Architecture • Land Planning • Urban Design

Texas Department of Transportation ® 2016

US 181 HARBOR BRIDGE

SUMMARY OF QUANTITIES SH 286(B1 & B2)

SHEET 2 OF 4

DESIGN	FED.RD. DIV.NO.	FEDERAL AID PROJECT NO.		HIGHWAY NO.
GRAPHICS	X	(See Title Sheet)		
	STATE	DISTRICT	COUNTY	SHEET NO.
CHECK	TEXAS	CRP	NUECES	
CHECK	CONTROL	SECTION	JOB	
	0101	06	095	08

	HARDSCAPE																					
ITEM NUMBER:	0529-6033	0528-6002	0528-6003	0528-6004	0528-6005	0531-6001	0636-6001	0636-6002	0668-6096	0678-6028	0668-6094	0678-6026	0666-6180	0678-6006	1002-6002	1002-6003	1002-6004	1002-6005	1002-6006	1002-6007	1002-6008	1002-6009
DESCRIPTION:	CONCRETE CURB (LANDSCAPE)	COLORED TEXTURED CONC (6") (TY 1) *North Parking*	COLORED TEXTURED CONC (6") (TY 2) *SUP Trail Head*	COLORED TEXTURED CONC (6") (TY 3) *band at parking*	COLORED TEXTURED CONC (6") (TY 4) *South Park*	CONC SIDEWALKS (4") *South Park*	ALUMINUM SIGNS (TYPE A) *SUP Sign*	ALUMINUM SIGNS (TYPE G) *Trail Crossing*	PREFAB PAV MARK TY C(W) (BIKE SYMBOL) *At SUP Entry*	PV SURF PREP FOR MRK (BIKE SYMBOL) *At SUP Entry*	PREFAB PAV MARK TY C(W) (BIKE ARROW) *At SUP Entry*	PV SURF PREP FOR MRK (BIKE ARROW) *At SUP Entry*	FLL PAV MARK TY II (W) (12") *Cont Crosswalk*	PAV SURF PREP FOR MARK (12") *Cont Crosswalk*	LANDSCAPE AMENITY TY 1 Recycled Bench	LANDSCAPE AMENITY TY 2 Wind Turbine	LANDSCAPE AMENITY TY 3 Bench/Belvedere	LANDSCAPE AMENITY TY 4 Bike Rack	LANDSCAPE AMENITY TY 5 Trail Map	LANDSCAPE AMENITY TY 6 Bike rack/Belv	LANDSCAPE AMENITY TY 7 Trellis at Park	LANDSCAPE AMENITY TY 8 Chime at Park
UNIT:	LF	SY	SY	SY	SY	SY	EA	EA	EA	EA	EA	EA	LF	LF	EA	EA	EA	EA	EA	EA	SY	EA
STATION/SHEET																						
C - SH 286																						
1192+00 - 1182+40 1	530	0	0	0	0	0	0	0	0	0	0	0	0	0	0	0	0	0	0	0	0	0
1182+40 - 1172+60 1	770	0	0	0	0	0	0	0	0	0	0	0	0	0	0	0	0	0	0	0	0	0
1172+60 - 1168+82 1	820	0	0	0	0	0	0	0	0	0	0	0	0	0	0	0	0	0	0	0	0	0
1168+82 - 1165+98 1	325	0	0	0	0	0	0	0	0	0	0	0	0	0	0	0	0	0	0	0	0	0
Subtotal C	**2445**	**0**	**0**	**0**	**0**	**0**	**0**	**0**	**0**	**0**	**0**	**0**	**0**	**0**	**0**	**0**	**0**	**0**	**0**	**0**	**0**	**0**
TOTAL:	**2,445.00**	**-**	**-**	**-**	**-**	**-**	**-**	**-**	**-**	**-**	**-**	**-**	**-**	**-**	**-**	**-**	**-**	**-**	**-**	**-**	**-**	**-**

	SOFTSCAPE					*Trees*	*Shrubs/GC*	*Broad*				*Tree Mych*	*Turf Humate*	*Trees*	*Shrubs/GC*
ITEM NUMBER:	0161-6012	0166-6001	0164-6066	0164-6057	0192-6012	0192-6063	0192-6065	0192-6066	0192-6002	0192-6004	0192-6026	1006-6001	1006-6002	1006-6003	1006-6004
DESCRIPTION:	GENERAL USE COMPOST (1")	FERTILIZER	DRILL SEEDING (PERM) TYPE A	CELL FBR MULCH SEED (PERM) TYPE B	MULCH	PLANT BED PREP (TYPE I)	PLANT BED PREP (TYPE III)	PLANT BED PREP (TYPE IV)	PLANT MATERIAL 1 GALLON) (SHRUB)	PLANT MATERIAL 3 GALLON) (SHRUB)	PLANT MATERIAL (65 GALLON) (TREE)	LANDSCAPE SOIL AMENDMENT (TYPE I)	LANDSCAPE SOIL AMENDMENT (TYPE II)	LANDSCAPE SOIL AMENDMENT (TYPE III)	LANDSCAPE SOIL AMENDMENT (TYPE IV)
UNIT:	CY	AC	SY	SY	CY	SY	SY	SY	EA	EA	EA	EA	SY	SY	SY
STATION/SHEET															
C - SH 286															
1192+00 - 1182+40 1	685	10.2	18,577	-	287	1,145	-	18,577	-	-	40	40	18577	40	0
1182+40 - 1172+60 1	520	8.6	15,553	-	440	1,160	295	15,553	-	300	47	47	15553	47	885
1172+60 - 1168+82 1	688	8.4	13,562	-	784	2,350	785	13,562	-	800	50	50	13562	50	2355
1168+82 - 1165+98 1	310	5.1	5,837	2,882	159	490	146	8,719	-	200	20	20	8719	20	438
Subtotal C	**2,203**	**32.3**	**53,529**	**2,882**	**1,670**	**5,145**	**1,226**	**56,411**	**-**	**1,300**	**157**	**157**	**56411**	**157**	**3678**
TOTAL:	**2,203**	**32.30**	**53,529**	**2,882**	**1,670**	**5,145**	**1,226**	**56,411**	**-**	**1,300**	**157**	**157**	**56,411**	**157**	**3,678**

ITEM NUMBER:	0168-6001	0162-6003
DESCRIPTION:	VEGETATIVE WATERING	STRAW OR HAY MULCH
UNIT:	MG	SY
STATION/SHEET		
C - SH 286		
1192+00 - 1182+40 1	460.8	18,577
1182+40 - 1172+60 1	385.6	15,553
1172+60 - 1168+82 1	336.2	13,562
1168+82 - 1165+98 1	216.2	5,837
Subtotal C	**1398.8**	**53,529**
TOTAL:	**1,398.83**	**53,529**

STATE OF TEXAS
MICHAEL P. MAUER
1510
REGISTERED
LANDSCAPE ARCHITECT
April 6, 2021

FLATIRON/DRAGADOS LLC

M2L Associates Inc.
Houston, Texas 77024
T: 713-722-8897 F: 713-722-8048
Landscape Architecture
Land Planning Urban Design

Texas Department of Transportation ® 2016

US 181 HARBOR BRIDGE

SUMMARY OF QUANTITIES US 181 (C)

SHEET 3 OF 4

DESIGN	FED.RD. DIV.NO.	FEDERAL AID PROJECT NO.		HIGHWAY NO.
GRAPHICS	X	(See Title Sheet)		
	STATE	DISTRICT	COUNTY	SHEET NO.
CHECK	TEXAS	CRP	NUECES	
CHECK	CONTROL	SECTION	JOB	
	0101	06	095	09

HARDSCAPE

ITEM NUMBER:	0450-6051	0529-6033	0528-6002	0528-6003	0528-6004	0528-6005	0531-6001	0636-6001	0636-6002	0668-6096	0678-6028	0668-6094	0678-6026	0666-6180	0678-6006	1002-6002	1002-6005	1002-6006	1002-6008	1002-6009
DESCRIPTION:	RAIL (HANDRAIL) (TY E)	CONCRETE CURB (LANDSCAPE)	COLORED TEXTURED CONC (6") (TY 1) *North Parking*	COLORED TEXTURED CONC (6") (TY 2) *SUP Trail Head*	COLORED TEXTURED CONC (6") (TY 3) *band at parking*	COLORED TEXTURED CONC (6") (TY 4) *South Park*	CONC SIDEWALKS (4") *South Park*	ALUMINUM SIGNS (TYPE A) *SUP Sign*	ALUMINUM SIGNS (TYPE G) *Trail Crossing*	PREFAB PAV MARK TY C(W) (BIKE SYMBOL) *At SUP Entry*	PV SURF PREP FOR MRK (BIKE SYMBOL) *At SUP Entry*	PREFAB PAV MARK TY C(W) (BIKE ARROW) *At SUP Entry*	PV SURF PREP FOR MRK (BIKE ARROW) *At SUP Entry*	FLL PAV MARK TY II (W) (12") *Cont Crosswalk*	PAV SURF PREP FOR MARK (12") *Cont Crosswalk*	LANDSCAPE AMENITY TY 1 Recycled Bench	LANDSCAPE AMENITY TY 4 Bike Rack	LANDSCAPE AMENITY TY 5 Trail Map	LANDSCAPE AMENITY TY 7 Trellis at Park	LANDSCAPE AMENITY TY 8 Chime at Park
UNIT:	LF	LF	SY	SY	SY	SY	SY	EA	EA	EA	EA	EA	EA	LF	LF	EA	EA	EA	SY	EA
STATION/SHEET																				
COKE STREET																				
34+05 - 29+57 1	0	0	0	0	0	0	0	0	0	0	0	0	0	-	-	-	0	0	0	0
29+57 - 25+55 1	0	0	0	0	0	0	0	1	1	1	1	1	1	30	30	-	0	0	0	0
25+55 - 21+70 1	0	0	0	0	0	0	0	2	1	2	2	2	2	90	90	-	0	0	0	0
21+70 - 19+50 1	0	0	0	0	0	-	-	1	0	1	1	1	1	-	-	-	0	0	0	0
Subtotal Coke Street	**0**	**0**	**0**	**0**	**0**	**-**	**-**	**4**	**2**	**4**	**4**	**4**	**4**	**120**	**120**	**-**	**0**	**0**	**0**	**0**
SOUTH PARK																				
	430	150	0	0	0	860	1,040	0	0	0	0	0	0	-	-	4	1	0	400	1
Subtotal South Park	**430**	**150**	**0**	**0**	**0**	**860**	**1,040**	**0**	**0**	**0**	**0**	**0**	**0**	**-**	**-**	**4**	**1**	**0**	**400**	**1**
SUP TRAIL																				
	0	0	0	0	0	-	-	0	0	0	0	0	0	-	-	-	0	0	0	0
Subtotal SUP TRAIL	**0**	**0**	**0**	**0**	**0**	**-**	**-**	**0**	**0**	**0**	**0**	**0**	**0**	**-**	**-**	**-**	**0**	**0**	**0**	**0**
TOTAL:	**430**	**150**	**-**	**-**	**-**	**860**	**1,040**	**4**	**2**	**4**	**4**	**4**	**4**	**120**	**120**	**4**	**1**	**-**	**400**	**1**

SOFTSCAPE

ITEM NUMBER:	0161-6012	0166-6001	0164-6066	0164-6057	0192-6012	0192-6063 *Trees/Palm*	0192-6065 *Shrubs/GC*	0192-6066 *Broad*	0192-6002	0192-6004	0192-6026	0192-6059 *Pslm*	1006-6001 *Tree/Palm Mych*	1006-6002 *Turf Humate*	1006-6003 *Trees/Palms*	1006-6004 *Shrubs/GC*
DESCRIPTION:	GENERAL USE COMPOST (1")	FERTILIZER	DRILL SEEDING (PERM) TYPE A	CELL FBR MULCH SEED (PERM) TYPE B	MULCH	PLANT BED PREP (TYPE I)	PLANT BED PREP (TYPE III)	PLANT BED PREP (TYPE IV)	PLANT MATERIAL 1 GALLON) (SHRUB)	PLANT MATERIAL 3 GALLON) (SHRUB)	PLANT MATERIAL (65 GALLON) (TREE)	PALM MATERIAL (TY 1)	LANDSCAPE SOIL AMENDMENT (TYPE I)	LANDSCAPE SOIL AMENDMENT (TYPE II)	LANDSCAPE SOIL AMENDMENT (TYPE III)	LANDSCAPE SOIL AMENDMENT (TYPE IV)
UNIT:	CY	AC	SY	SY	CY	SY	SY	SY	EA	EA	EA	EA	EA	SY	SY	SY
STATION/SHEET																
COKE STREET																
34+05 - 29+57 1	14	0.3	516	-	-	-	-	516	-	-	-	-	-	516	-	-
29+57 - 25+55 1	-	0.6	835	-	-	-	-	835	-	-	-	-	-	835	-	-
25+55 - 21+70 1	57	2.3	2,050	-	-	-	-	2,050	-	-	-	-	-	2,050	-	-
21+70 - 19+50 1	12	0.3	440	-	-	-	-	440	-	-	-	-	-	440	-	-
Subtotal Coke Street	**83**	**3.5**	**3,841**	**-**	**-**	**-**	**-**	**3,841**	**-**	**-**	**-**	**-**	**-**	**3,841**	**-**	**-**
SOUTH PARK																
	82	1.8	2,970	-	35	150	56	2,970	-	100	4	6	10	2,970	150	168
Subtotal South Park	**82**	**1.8**	**2,970**	**-**	**35**	**150**	**56**	**2,970**	**-**	**100**	**4**	**6**	**10**	**2,970**	**150**	**168**
SUP TRAIL																
	0	0	0	0	0	0	0	0	0	0	0	0	0	0	0	0
Subtotal SUP TRAIL	**0**	**0**	**0**	**0**	**0**	**0**	**0**	**0**	**0**	**0**	**0**	**0**	**0**	**0**	**0**	**0**
TOTAL:	**165**	**5.3**	**6,811**	**-**	**35**	**150**	**56**	**6,811**	**-**	**100**	**4**	**6**	**10**	**6,811**	**150**	**168**

ELECTRICAL (South Park Only)

ITEM NUMBER:	1002-6010	1002-6011	0628-2170	0624-2014	0620-2014	0618-2012	0168-6001	0162-6003
DESCRIPTION:	LANDSCAPE AMENITY TY 9 Fix C South Park	LANDSCAPE AMENITY TY 10 Fix E South Park	ELC SRV TY T 120/240 000 (NS)GS (N) GC(0) Electrical Srv	GROUND BOX TYP D (162922) W/APRON Ground Box	ELEC CONDR (NO. 10) INSULATED Wiring	COND (PVC) (SCHD 40(1") Conduit	VEGETATIVE WATERING	STRAW OR HAY MULCH
UNIT:	EA	EA	EA	EA	LF	LF	MG	SY
STATION/SHEET								
COKE STREET								
34+05 - 29+57 1	0	0	0	0	0	0	12.8	516
29+57 - 25+55 1	0	0	0	0	0	0	20.7	835
25+55 - 21+70 1	0	0	0	0	0	0	50.8	2,050
21+70 - 19+50 1	0	0	0	0	0	0	10.9	440
Subtotal Coke Street	**0**	**0**	**0**	**0**	**0**	**0**	**95.2**	**3,841**
SOUTH PARK								
	14	21	0	0	0	0	150.0	2,970
Subtotal South Park	**14**	**21**	**0**	**0**	**0**	**0**	**150.0**	**2,970**
SUP TRAIL								
	-	-	-	-	-	-	0	-
Subtotal SUP TRAIL	**-**	**-**	**-**	**-**	**-**	**-**	**0**	**-**
TOTAL:	**14**	**21**	**-**	**-**	**-**	**-**	**245.2**	**6,811**

SHARED USE PATH AMENITIES

1002-6012	1002-6013	1002-6014	1002-6015	1002-6007	1002-6004
LANDSCAPE AMENITY TY 11 LED Dist Marker	LANDSCAPE AMENITY TY 12 Interpretive Panels	LANDSCAPE AMENITY TY 13 Aluminum Star Panel	LANDSCAPE AMENITY TY 14 Viewfinder	LANDSCAPE AMENITY TY 6 Bike rack/Belv	LANDSCAPE AMENITY TY 3 Bench/Belvedere
EA	EA	EA	EA	EA	EA
0	0	0	0	0	0
0	0	0	0	0	0
0	0	0	0	0	0
0	0	0	0	0	0
0	**0**	**0**	**0**	**0**	**0**
0	0	0	0	0	0
0	**0**	**0**	**0**	**0**	**0**
7	3	1	2	0	1
7	**3**	**1**	**2**	**0**	**1**
7	**3**	**1**	**2**	**-**	**1**

STATE OF TEXAS
MICHAEL P. MAUER
1510
REGISTERED
LANDSCAPE ARCHITECT
March 13, 2023

FLATIRON/DRAGADOS LLC

M2L Associates Inc.
Houston, Texas 77024
T: 713-722-8897 F: 713-722-8048
•Landscape Architecture•
•Land Planning• Urban Design•

Texas Department of Transportation ©2016

US 181 HARBOR BRIDGE

SUMMARY OF QUANTITIES Coke Street(F) & South Park(D)

SHEET 4 OF 4

DESIGN	FED.RD. DIV.NO.	FEDERAL AID PROJECT NO.		HIGHWAY NO.
GRAPHICS	X	(See Title Sheet)		
	STATE	DISTRICT	COUNTY	SHEET NO.
CHECK	TEXAS	CRP	NUECES	
CHECK	CONTROL	SECTION	JOB	
	0101	06	095	10

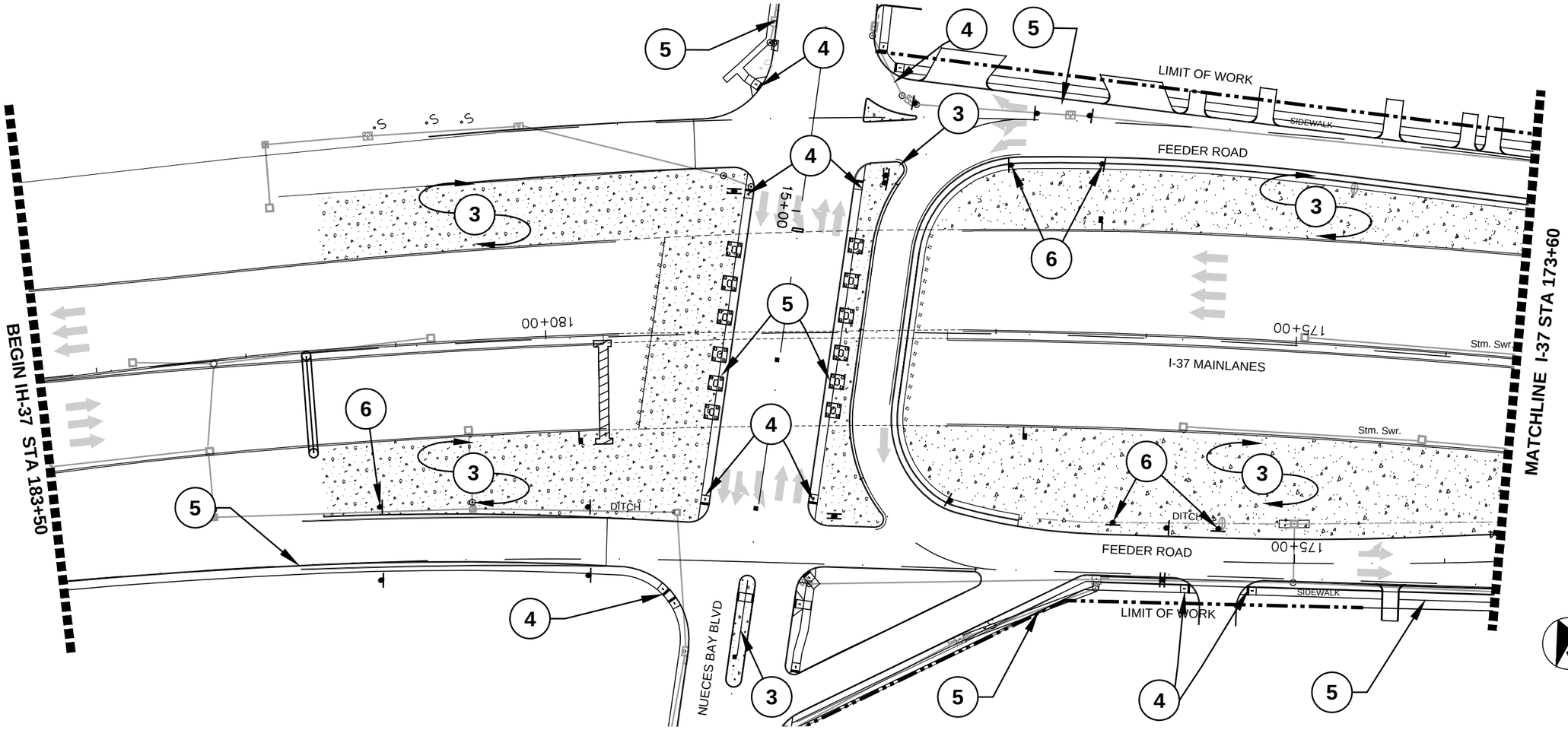

SHEET QUANTITIES - LAYOUT			
ITEM	DESCRIPTION	UNIT	QNTY.
0529-6033	CONCRETE CURB (LANDSCAPE)	LF	0

DETAIL NOTES:

1. **NOT USED**
2. CONCRETE LANDSCAPE CURB, **SEE CONSTRUCTION DETAILS SHEET 3 OF 10**
3. CONCRETE RIP RAP, **SEE CIVIL ENGINEERING DRAWINGS**
4. ACCESS RAMP, **SEE SITE CIVIL ENGINEERING DRAWINGS**
5. SIDEWALK, **SEE SITE CIVIL ENGINEERING DRAWINGS**
6. STREET SIGN- TYPICAL

GENERAL NOTES:

1. SEE LANDSCAPE GENERAL NOTES SHEET 1 OF 1 FOR ADDITIONAL INFORMATION

DRAWING LEGEND:

3 — DETAIL REFERENCE

STATE OF TEXAS
MICHAEL P. MAUER
1510
REGISTERED LANDSCAPE ARCHITECT
APRIL 6, 2021

FLATIRON/DRAGADOS LLC

M2L Associates Inc.
Houston, Texas 77024
T: 713-722-8897 F: 713-722-8048
Landscape Architecture • Land Planning • Urban Design

Texas Department of Transportation ® 2016

US 181 HARBOR BRIDGE

LAYOUT PLAN

IH 37
(STA 183+50 -173+60)

SHEET 1 OF 11

DESIGN	FED.RD. DIV.NO.	FEDERAL AID PROJECT NO.		HIGHWAY NO.
GRAPHICS	X	(See Title Sheet)		
	STATE	DISTRICT	COUNTY	SHEET NO.
CHECK	TEXAS	CRP	NUECES	A101
	CONTROL	SECTION	JOB	11
CHECK	0101	06	095	

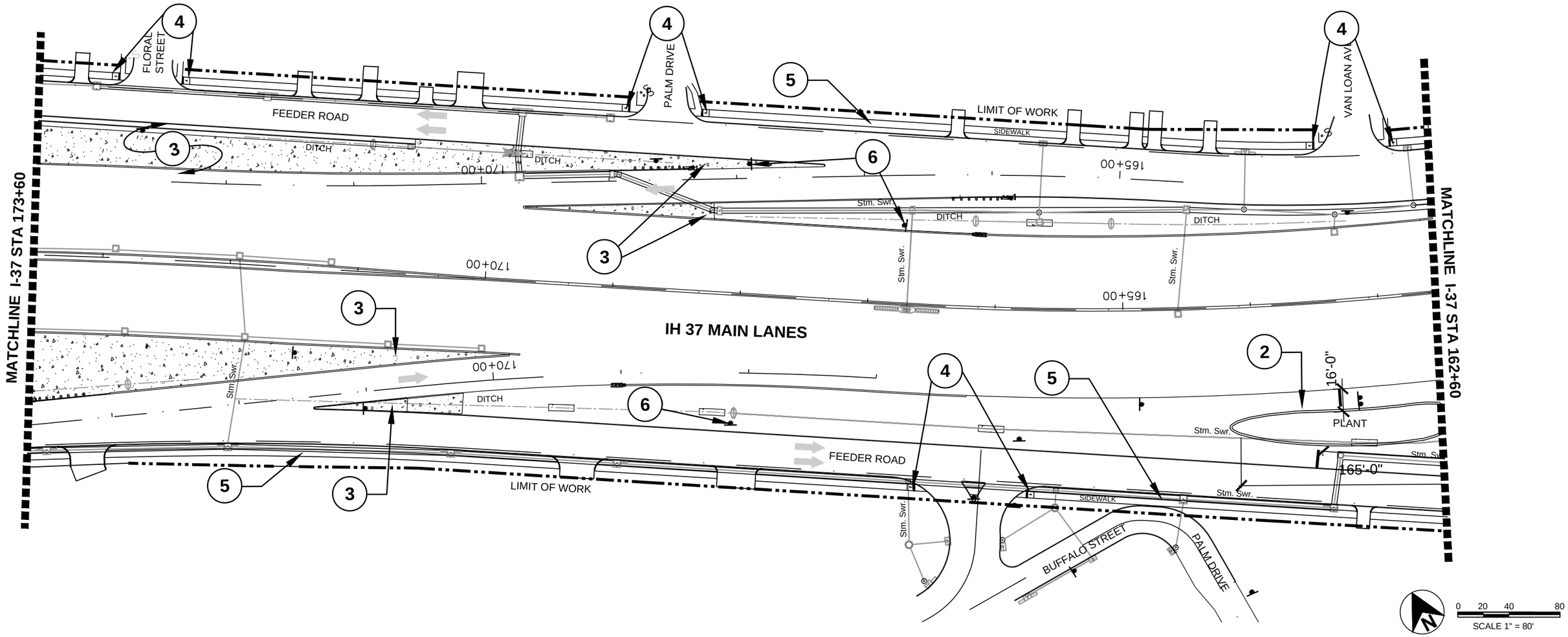

SHEET QUANTITIES - LAYOUT			
ITEM	DESCRIPTION	UNIT	QNTY.
0529-6033	CONCRETE CURB (LANDSCAPE)	LF	345

DETAIL NOTES:

1. **NOT USED**
2. CONCRETE LANDSCAPE CURB, **SEE CONSTRUCTION DETAILS SHEET 3 OF 10**
3. CONCRETE RIP RAP, **SEE CIVIL ENGINEERING DRAWINGS**
4. ACCESS RAMP, **SEE SITE CIVIL ENGINEERING DRAWINGS**
5. SIDEWALK, **SEE SITE CIVIL ENGINEERING DRAWINGS**
6. STREET SIGN- TYPICAL

GENERAL NOTES:

1. SEE LANDSCAPE GENERAL NOTES SHEET 1 OF 1 FOR ADDITIONAL INFORMATION

DRAWING LEGEND:

3 — DETAIL REFERENCE

STATE OF TEXAS
MICHAEL P. MAUER
1510
REGISTERED LANDSCAPE ARCHITECT
APRIL 6, 2021

FLATIRON/DRAGADOS LLC

M2L Associates Inc.
Houston, Texas 77024
T: 713-722-8897 F: 713-722-8048
Landscape Architecture • Land Planning • Urban Design

Texas Department of Transportation ® 2016

US 181 HARBOR BRIDGE

LAYOUT PLAN

IH 37
(STA 173+60 -162+60)

SHEET 2 OF 11

DESIGN	FED.RD. DIV.NO.	FEDERAL AID PROJECT NO.		HIGHWAY NO.
GRAPHICS	X	(See Title Sheet)		
	STATE	DISTRICT	COUNTY	SHEET NO.
CHECK	TEXAS	CRP	NUECES	A102
	CONTROL	SECTION	JOB	12
CHECK	0101	06	095	

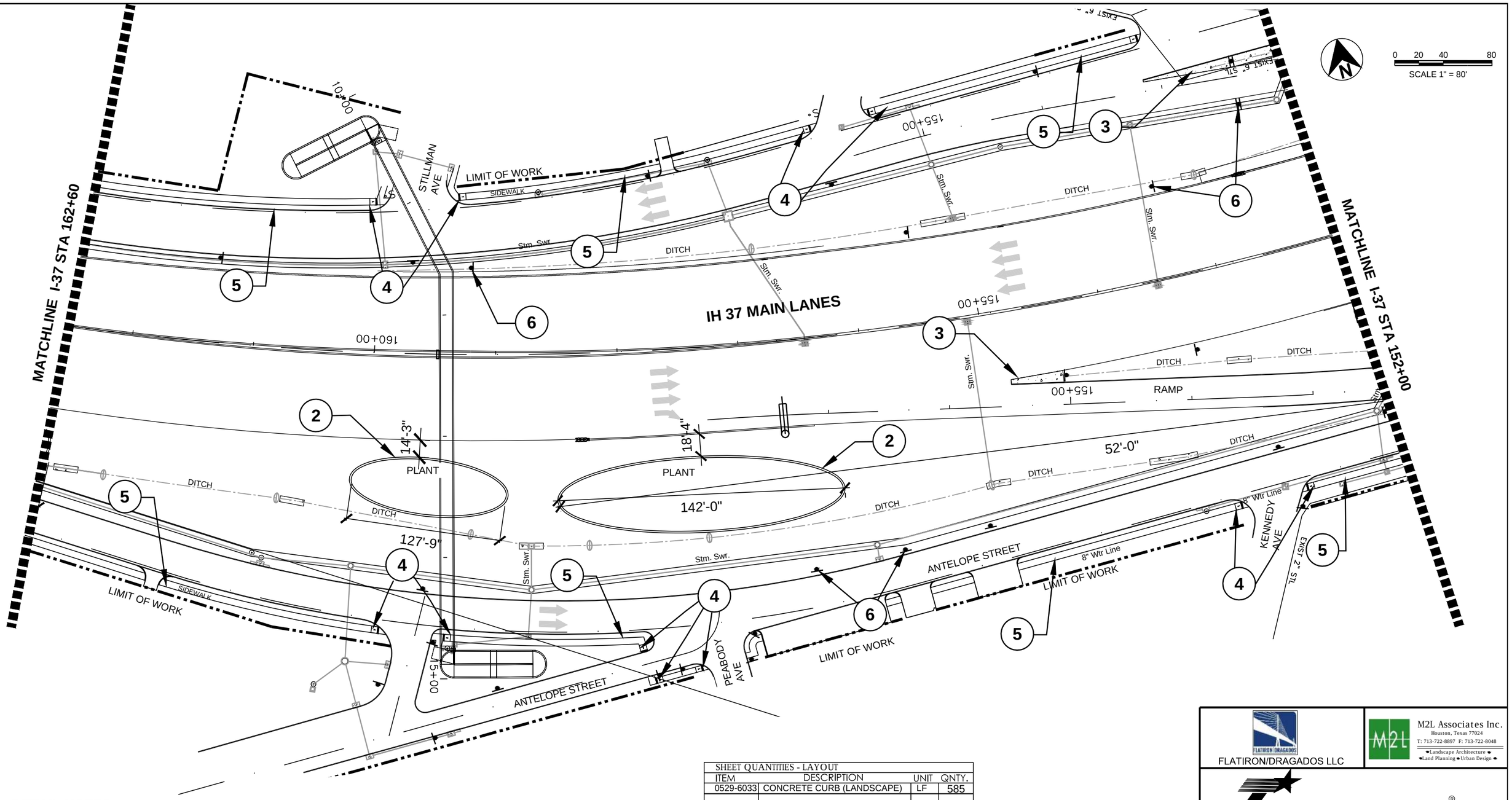

DETAIL NOTES:

1. **NOT USED**
2. CONCRETE LANDSCAPE CURB, **SEE CONSTRUCTION DETAILS SHEET 3 OF 10**
3. CONCRETE RIP RAP, **SEE CIVIL ENGINEERING DRAWINGS**
4. ACCESS RAMP, **SEE SITE CIVIL ENGINEERING DRAWINGS**
5. SIDEWALK, **SEE SITE CIVIL ENGINEERING DRAWINGS**
6. STREET SIGN- TYPICAL

GENERAL NOTES:

1. SEE LANDSCAPE GENERAL NOTES SHEET 1 OF 1 FOR ADDITIONAL INFORMATION

SHEET QUANTITIES - LAYOUT

ITEM	DESCRIPTION	UNIT	QNTY.
0529-6033	CONCRETE CURB (LANDSCAPE)	LF	585

DRAWING LEGEND:

3 — DETAIL REFERENCE

STATE OF TEXAS
MICHAEL P. MAUER
1510
REGISTERED LANDSCAPE ARCHITECT
APRIL 6, 2021

FLATIRON/DRAGADOS LLC

M2L Associates Inc.
Houston, Texas 77024
T: 713-722-8897 F: 713-722-8048
Landscape Architecture • Land Planning • Urban Design

Texas Department of Transportation ® 2016

US 181 HARBOR BRIDGE

LAYOUT PLAN

IH 37
(STA 162+60 -152+00)

SHEET 3 OF 11

DESIGN	FED.RD. DIV.NO.	FEDERAL AID PROJECT NO.		HIGHWAY NO.
GRAPHICS	X	(See Title Sheet)		
	STATE	DISTRICT	COUNTY	SHEET NO.
CHECK	TEXAS	CRP	NUECES	A103
	CONTROL	SECTION	JOB	13
CHECK	0101	06	095	

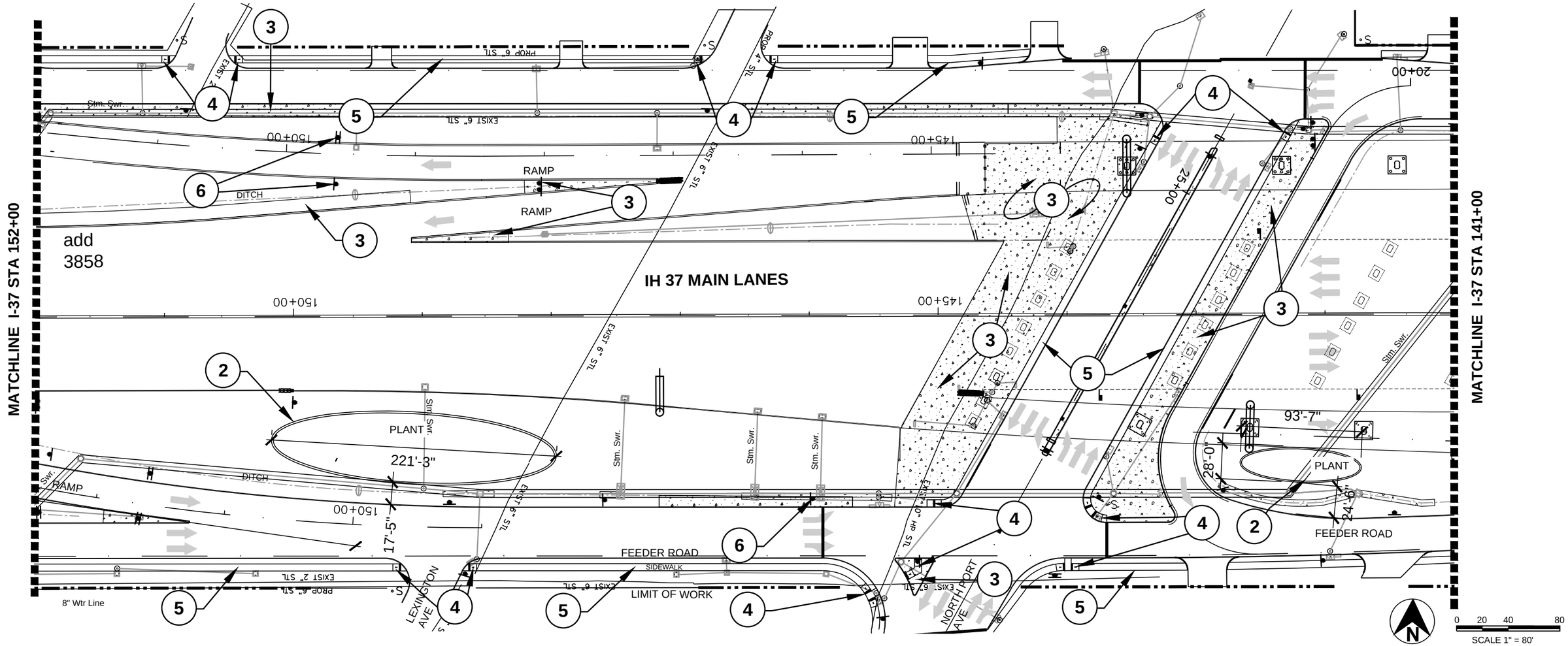

SHEET QUANTITIES - LAYOUT			
ITEM	DESCRIPTION	UNIT	QNTY.
0529-6033	CONCRETE CURB (LANDSCAPE)	LF	800

DETAIL NOTES:

1. **NOT USED**
2. CONCRETE LANDSCAPE CURB, **SEE CONSTRUCTION DETAILS SHEET 3 OF 10**
3. CONCRETE RIP RAP, **SEE CIVIL ENGINEERING DRAWINGS**
4. ACCESS RAMP, **SEE SITE CIVIL ENGINEERING DRAWINGS**
5. SIDEWALK, **SEE SITE CIVIL ENGINEERING DRAWINGS**
6. STREET SIGN- TYPICAL

GENERAL NOTES:

1. SEE LANDSCAPE GENERAL NOTES SHEET 1 OF 1 FOR ADDITIONAL INFORMATION

DRAWING LEGEND:

3 — DETAIL REFERENCE

STATE OF TEXAS
MICHAEL P. MAUER
1510
REGISTERED LANDSCAPE ARCHITECT
APRIL 6, 2021

FLATIRON/DRAGADOS LLC

M2L Associates Inc.
Houston, Texas 77024
T: 713-722-8897 F: 713-722-8048
Landscape Architecture • Land Planning • Urban Design

Texas Department of Transportation ® 2016

US 181 HARBOR BRIDGE

LAYOUT PLAN

IH 37
(STA 152+00 -141+00)

SHEET 4 OF 11

DESIGN	FED.RD. DIV.NO.	FEDERAL AID PROJECT NO.		HIGHWAY NO.
GRAPHICS	X	(See Title Sheet)		
	STATE	DISTRICT	COUNTY	SHEET NO.
CHECK	TEXAS	CRP	NUECES	A104
CHECK	CONTROL	SECTION	JOB	
	0101	06	095	14

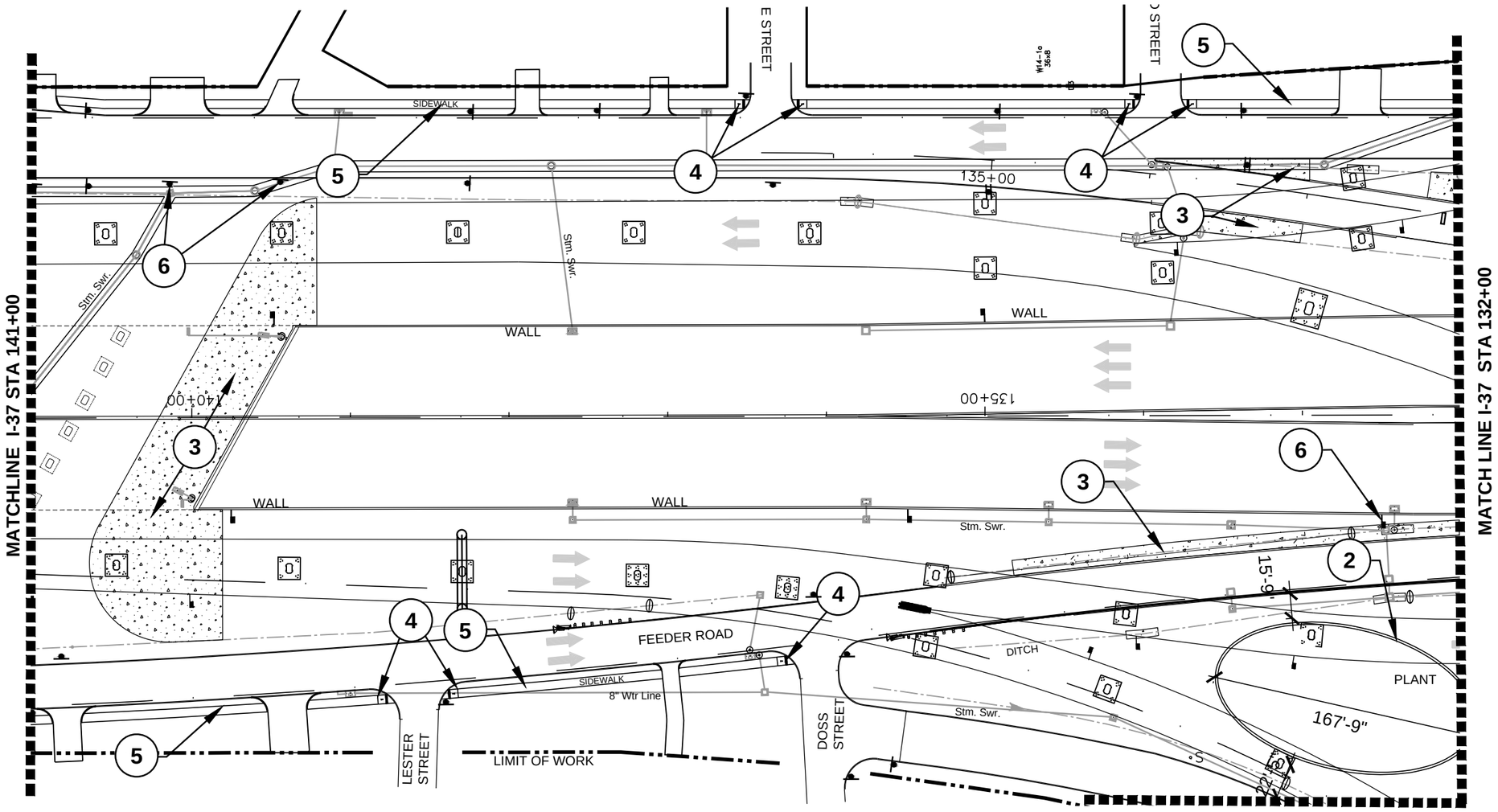

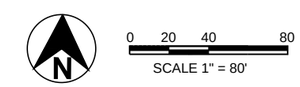

SHEET QUANTITIES - LAYOUT			
ITEM	DESCRIPTION	UNIT	QNTY.
0529-6033	CONCRETE CURB (LANDSCAPE)	LF	365

DETAIL NOTES:

1. **NOT USED**
2. CONCRETE LANDSCAPE CURB, **SEE CONSTRUCTION DETAILS SHEET 3 OF 10**
3. CONCRETE RIP RAP, **SEE CIVIL ENGINEERING DRAWINGS**
4. ACCESS RAMP, **SEE SITE CIVIL ENGINEERING DRAWINGS**
5. SIDEWALK, **SEE SITE CIVIL ENGINEERING DRAWINGS**
6. STREET SIGN- TYPICAL

GENERAL NOTES:

1. SEE LANDSCAPE GENERAL NOTES SHEET 1 OF 1 FOR ADDITIONAL INFORMATION

DRAWING LEGEND:

3 — DETAIL REFERENCE

STATE OF TEXAS
MICHAEL P. MAUER
1510
REGISTERED LANDSCAPE ARCHITECT
APRIL 6, 2021

FLATIRON/DRAGADOS LLC

M2L Associates Inc.
Houston, Texas 77024
T: 713-722-8897 F: 713-722-8048
Landscape Architecture • Land Planning • Urban Design

Texas Department of Transportation ® 2016

US 181 HARBOR BRIDGE

LAYOUT PLAN

IH 37
(STA 141+00 -132+00)

SHEET 5 OF 11

DESIGN	FED.RD. DIV.NO.	FEDERAL AID PROJECT NO.		HIGHWAY NO.
GRAPHICS	X	(See Title Sheet)		
	STATE	DISTRICT	COUNTY	SHEET NO.
CHECK	TEXAS	CRP	NUECES	A105
CHECK	CONTROL	SECTION	JOB	
	0101	06	095	15

MATCH LINE US181 STA 1159+00 (SEE US181 1159+00 - 1155+00

MATCHLINE I-37 STA 132+00

MATCH LINE IH-37 STA 122+00

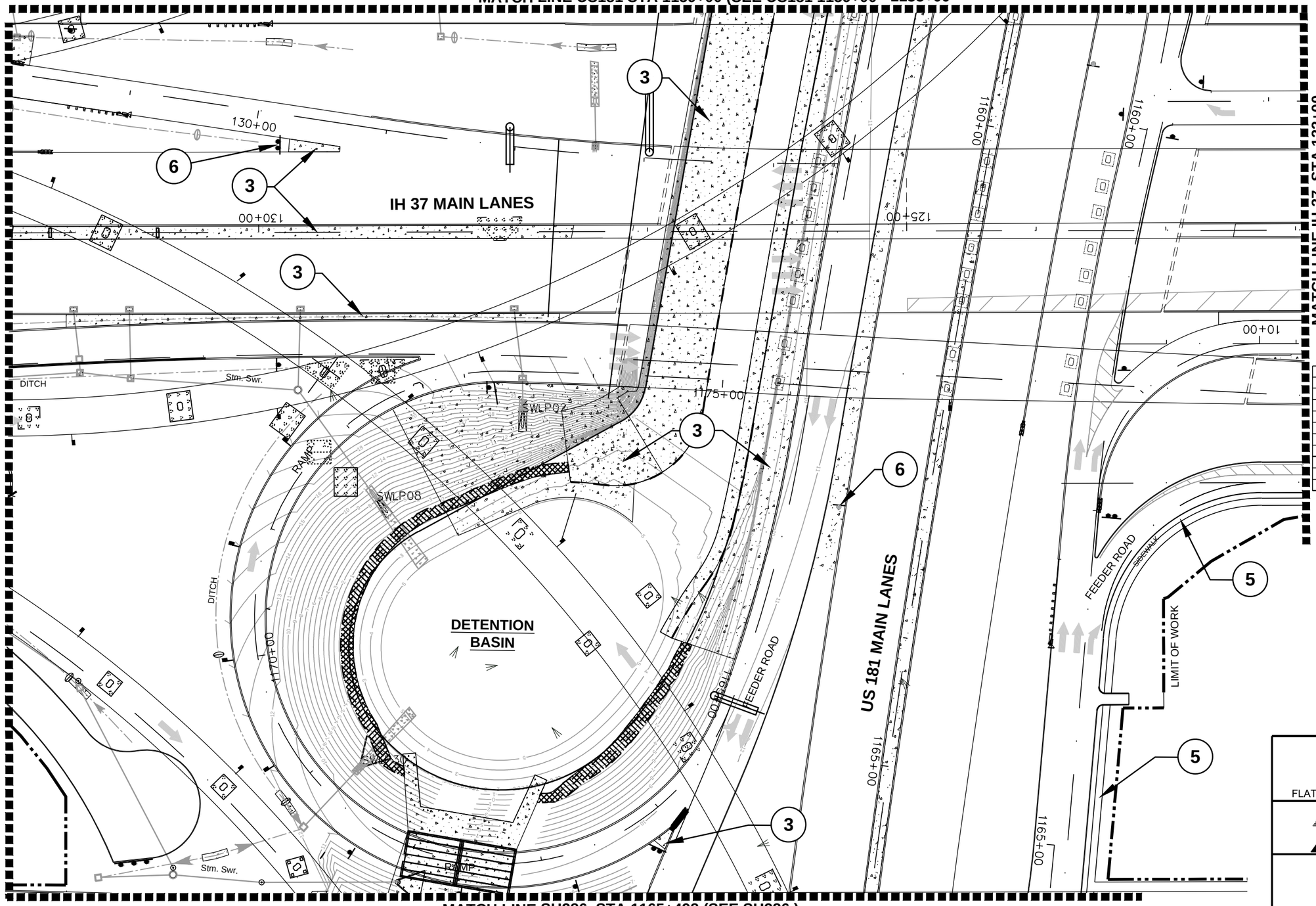

MATCH LINE SH286 STA 1165+498 (SEE SH286)

SHEET QUANTITIES - LAYOUT			
ITEM	DESCRIPTION	UNIT	QNTY.
0529-6033	CONCRETE CURB (LANDSCAPE)	LF	0

SCALE 1" = 80'

DETAIL NOTES:

1. **NOT USED**
2. CONCRETE LANDSCAPE CURB, **SEE CONSTRUCTION DETAILS SHEET 3 OF 10**
3. CONCRETE RIP RAP, **SEE CIVIL ENGINEERING DRAWINGS**
4. ACCESS RAMP, **SEE SITE CIVIL ENGINEERING DRAWINGS**
5. SIDEWALK, **SEE SITE CIVIL ENGINEERING DRAWINGS**
6. STREET SIGN- TYPICAL

GENERAL NOTES:

1. SEE LANDSCAPE GENERAL NOTES SHEET 1 OF 1 FOR ADDITIONAL INFORMATION

DRAWING LEGEND:

3 — DETAIL REFERENCE

STATE OF TEXAS
MICHAEL P. MAUER
1510
REGISTERED LANDSCAPE ARCHITECT
APRIL 6, 2021

FLATIRON/DRAGADOS LLC

M2L Associates Inc.
Houston, Texas 77024
T: 713-722-8897 F: 713-722-8048
Landscape Architecture • Land Planning • Urban Design

Texas Department of Transportation ® 2016

US 181 HARBOR BRIDGE

LAYOUT PLAN

IH 37
(STA 132+00 -122+00)

SHEET 6 OF 11

DESIGN	FED.RD. DIV.NO.	FEDERAL AID PROJECT NO.		HIGHWAY NO.
GRAPHICS	X	(See Title Sheet)		
	STATE	DISTRICT	COUNTY	SHEET NO.
CHECK	TEXAS	CRP	NUECES	A106
	CONTROL	SECTION	JOB	16
CHECK	0101	06	095	

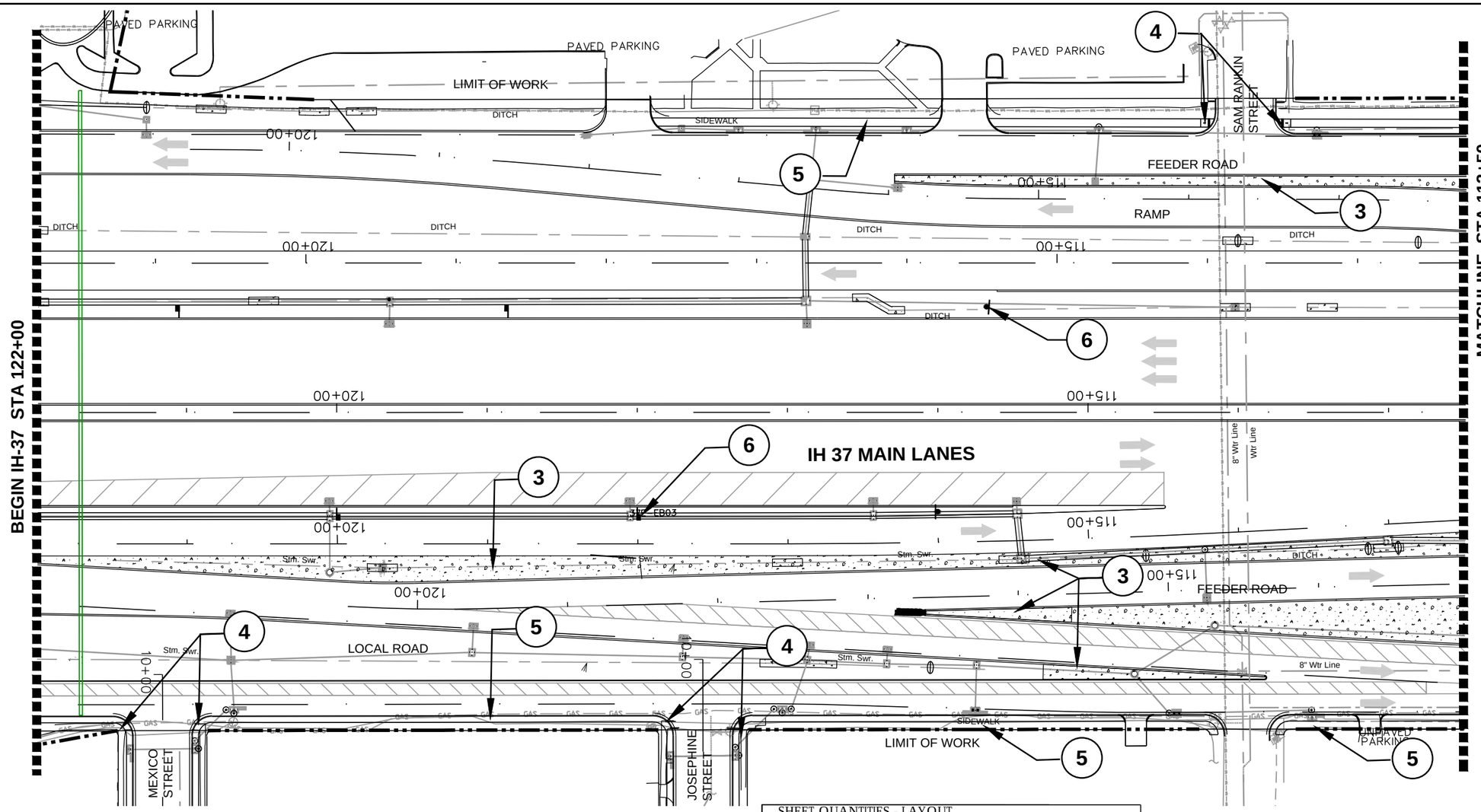

DRAWING LEGEND:

3 — DETAIL REFERENCE

N

0 20 40 80
SCALE 1" = 80'

DETAIL NOTES:

1. **NOT USED**
2. CONCRETE LANDSCAPE CURB, **SEE CONSTRUCTION DETAILS SHEET 3 OF 10**
3. CONCRETE RIP RAP, **SEE CIVIL ENGINEERING DRAWINGS**
4. ACCESS RAMP, **SEE SITE CIVIL ENGINEERING DRAWINGS**
5. SIDEWALK, **SEE SITE CIVIL ENGINEERING DRAWINGS**
6. STREET SIGN- TYPICAL

SHEET QUANTITIES - LAYOUT

ITEM	DESCRIPTION	UNIT	QNTY.
0529-6033	CONCRETE CURB (LANDSCAPE)	LF	0

GENERAL NOTES:

1. SEE LANDSCAPE GENERAL NOTES SHEET 1 OF 1 FOR ADDITIONAL INFORMATION

STATE OF TEXAS
MICHAEL P. MAUER
1510
REGISTERED LANDSCAPE ARCHITECT
April 6, 2021

FLATIRON/DRAGADOS LLC

M2L Associates Inc.
Houston, Texas 77024
T: 713-722-8897 F: 713-722-8048
Landscape Architecture • Land Planning • Urban Design

Texas Department of Transportation ® 2016

US 181 HARBOR BRIDGE

LAYOUT PLAN

IH 37
(STA 122+00 -112+50)

SHEET 7 OF 11

DESIGN	FED.RD. DIV.NO.	FEDERAL AID PROJECT NO.		HIGHWAY NO.
GRAPHICS	X	(See Title Sheet)		
	STATE	DISTRICT	COUNTY	SHEET NO.
CHECK	TEXAS	CRP	NUECES	A107
CHECK	CONTROL	SECTION	JOB	17
	0101	06	095	

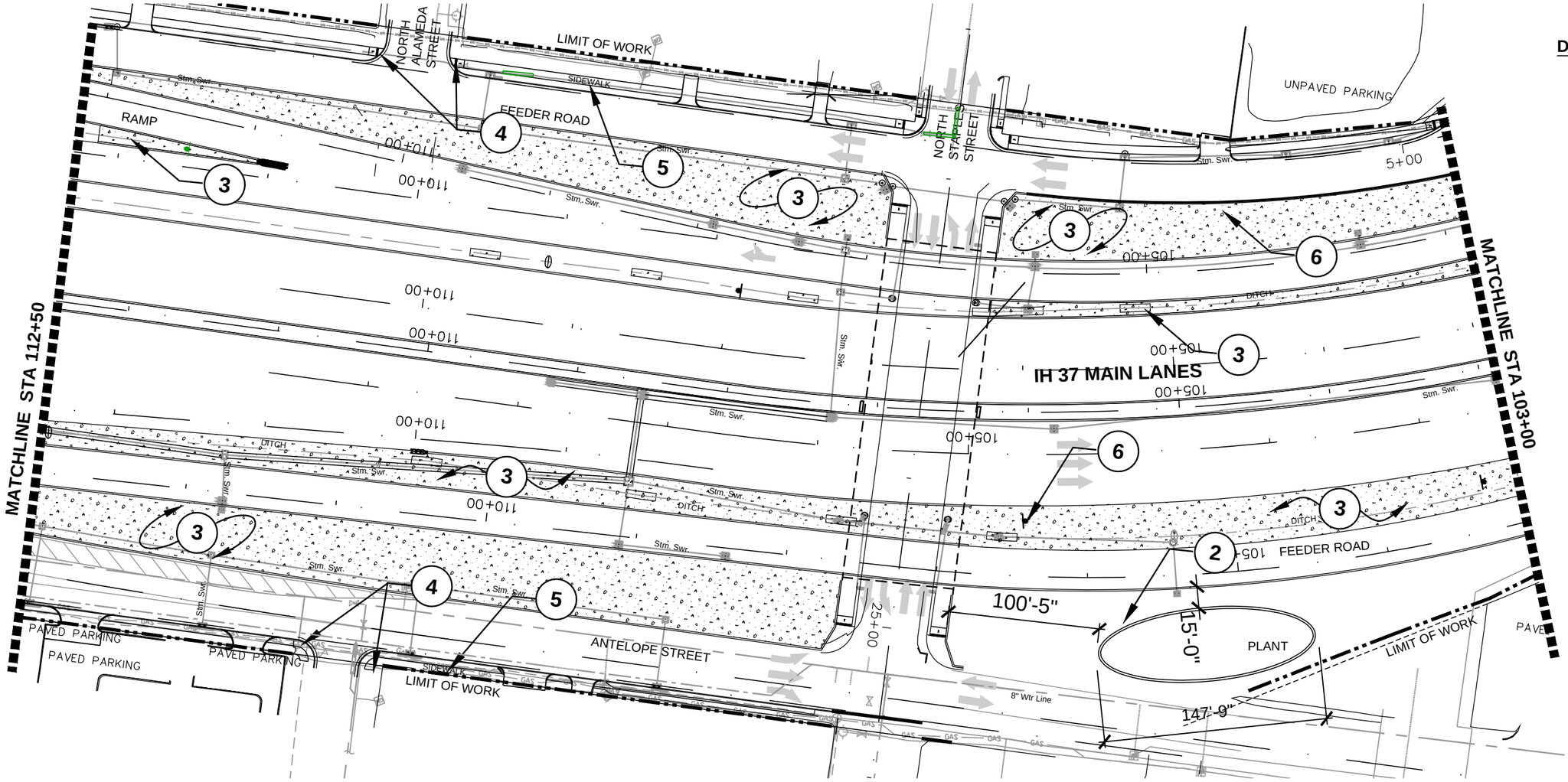

DETAIL NOTES:

1. **NOT USED**
2. CONCRETE LANDSCAPE CURB, **SEE CONSTRUCTION DETAILS SHEET 3 OF 10**
3. CONCRETE RIP RAP, **SEE CIVIL ENGINEERING DRAWINGS**
4. ACCESS RAMP, **SEE SITE CIVIL ENGINEERING DRAWINGS**
5. SIDEWALK, **SEE SITE CIVIL ENGINEERING DRAWINGS**
6. STREET SIGN- TYPICAL

SHEET QUANTITIES - LAYOUT

ITEM	DESCRIPTION	UNIT	QNTY.
0529-6033	CONCRETE CURB (LANDSCAPE)	LF	325

GENERAL NOTES:

1. SEE LANDSCAPE GENERAL NOTES SHEET 1 OF 1 FOR ADDITIONAL INFORMATION

STATE OF TEXAS
MICHAEL P. MAUER
1510
REGISTERED LANDSCAPE ARCHITECT
April 6, 2021

FLATIRON/DRAGADOS LLC

M2L Associates Inc.
Houston, Texas 77024
T: 713-722-8897 F: 713-722-8048
Landscape Architecture • Land Planning • Urban Design

Texas Department of Transportation ® 2016

US 181 HARBOR BRIDGE

LAYOUT PLAN

IH 37
(STA 112+50 -103+00)

SHEET 8 OF 11

DESIGN	FED.RD. DIV.NO.	FEDERAL AID PROJECT NO.		HIGHWAY NO.
GRAPHICS	X	(See Title Sheet)		
	STATE	DISTRICT	COUNTY	SHEET NO.
CHECK	TEXAS	CRP	NUECES	A108
CHECK	CONTROL	SECTION	JOB	18
	0101	06	095	

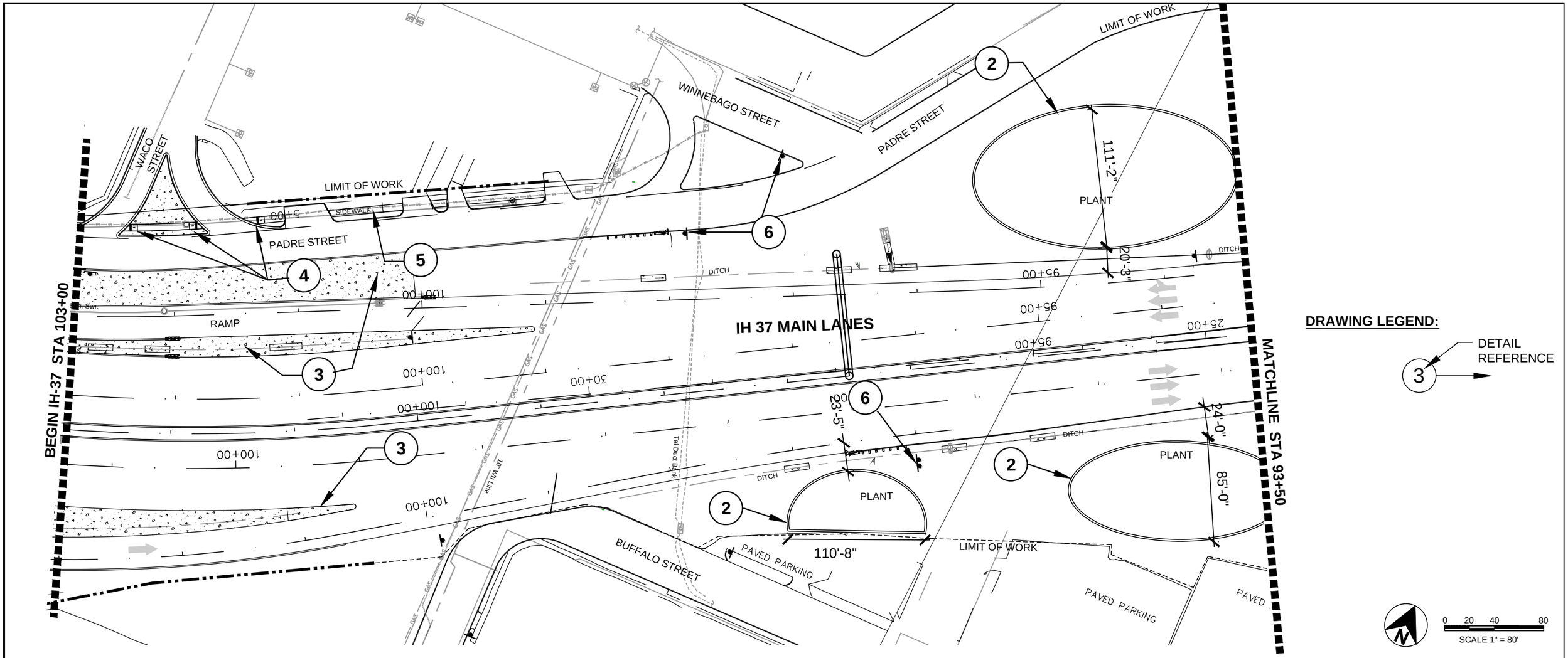

DETAIL NOTES:

1. **NOT USED**
2. CONCRETE LANDSCAPE CURB, **SEE CONSTRUCTION DETAILS SHEET 3 OF 10**
3. CONCRETE RIP RAP, **SEE CIVIL ENGINEERING DRAWINGS**
4. ACCESS RAMP, **SEE SITE CIVIL ENGINEERING DRAWINGS**
5. SIDEWALK, **SEE SITE CIVIL ENGINEERING DRAWINGS**
6. STREET SIGN- TYPICAL

SHEET QUANTITIES - LAYOUT

ITEM	DESCRIPTION	UNIT	QNTY.
0529-6033	CONCRETE CURB (LANDSCAPE)	LF	1200

GENERAL NOTES:

1. SEE LANDSCAPE GENERAL NOTES SHEET 1 OF 1 FOR ADDITIONAL INFORMATION

STATE OF TEXAS
MICHAEL P. MAUER
1510
REGISTERED LANDSCAPE ARCHITECT
April 6, 2021

FLATIRON/DRAGADOS LLC

M2L Associates Inc.
Houston, Texas 77024
T: 713-722-8897 F: 713-722-8048
Landscape Architecture • Land Planning • Urban Design

Texas Department of Transportation ® 2016

US 181 HARBOR BRIDGE

LAYOUT PLAN

IH 37
(STA 103+00 - 93+50)

SHEET 9 OF 11

DESIGN	FED.RD. DIV.NO.	FEDERAL AID PROJECT NO.		HIGHWAY NO.
GRAPHICS	X	(See Title Sheet)		
	STATE	DISTRICT	COUNTY	SHEET NO.
CHECK	TEXAS	CRP	NUECES	A109
	CONTROL	SECTION	JOB	
CHECK	0101	06	095	19

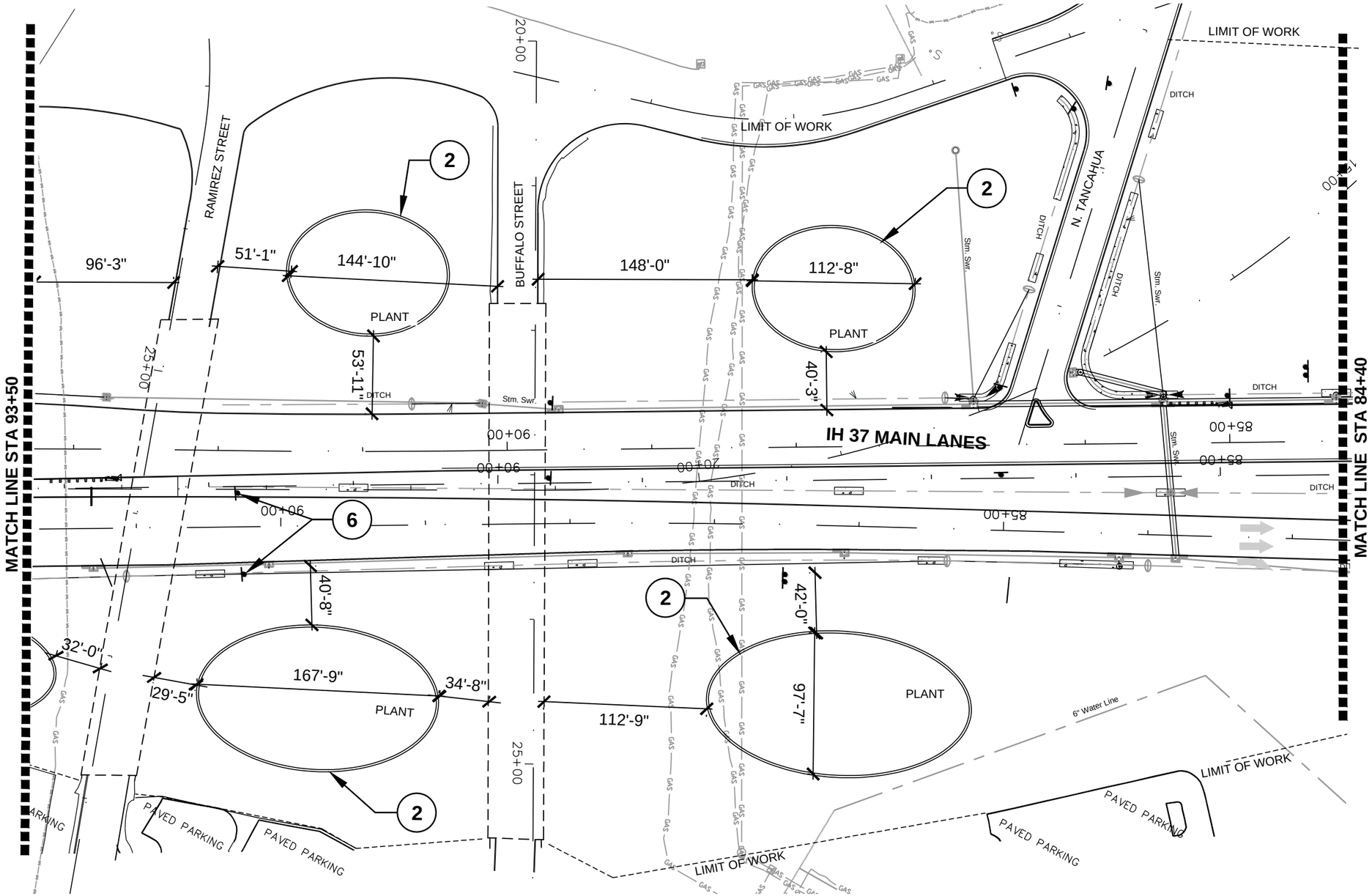

DRAWING LEGEND:

DETAIL REFERENCE 3

0 20 40 80
SCALE 1" = 80'

DETAIL NOTES:

1. **NOT USED**
2. CONCRETE LANDSCAPE CURB, **SEE CONSTRUCTION DETAILS SHEET 3 OF 10**
3. CONCRETE RIP RAP, **SEE CIVIL ENGINEERING DRAWINGS**
4. ACCESS RAMP, **SEE SITE CIVIL ENGINEERING DRAWINGS**
5. SIDEWALK, **SEE SITE CIVIL ENGINEERING DRAWINGS**
6. STREET SIGN- TYPICAL

GENERAL NOTES:

1. SEE LANDSCAPE GENERAL NOTES SHEET 1 OF 1 FOR ADDITIONAL INFORMATION

SHEET QUANTITIES - LAYOUT

ITEM	DESCRIPTION	UNIT	QNTY.
0529-6033	CONCRETE CURB (LANDSCAPE)	LF	1530

STATE OF TEXAS
MICHAEL P. MAUER
1510
REGISTERED LANDSCAPE ARCHITECT
April 6, 2021

FLATIRON/DRAGADOS LLC

M2L Associates Inc.
Houston, Texas 77024
T: 713-722-8897 F: 713-722-8048
Landscape Architecture • Land Planning • Urban Design

Texas Department of Transportation ® 2016

US 181 HARBOR BRIDGE

LAYOUT PLAN

IH 37
(STA 93+50 - 84+40)

SHEET 10 OF 11

DESIGN	FED.RD. DIV.NO.	FEDERAL AID PROJECT NO.		HIGHWAY NO.
GRAPHICS	X	(See Title Sheet)		
	STATE	DISTRICT	COUNTY	SHEET NO.
CHECK	TEXAS	CRP	NUECES	A110
CHECK	CONTROL	SECTION	JOB	
	0101	06	095	20

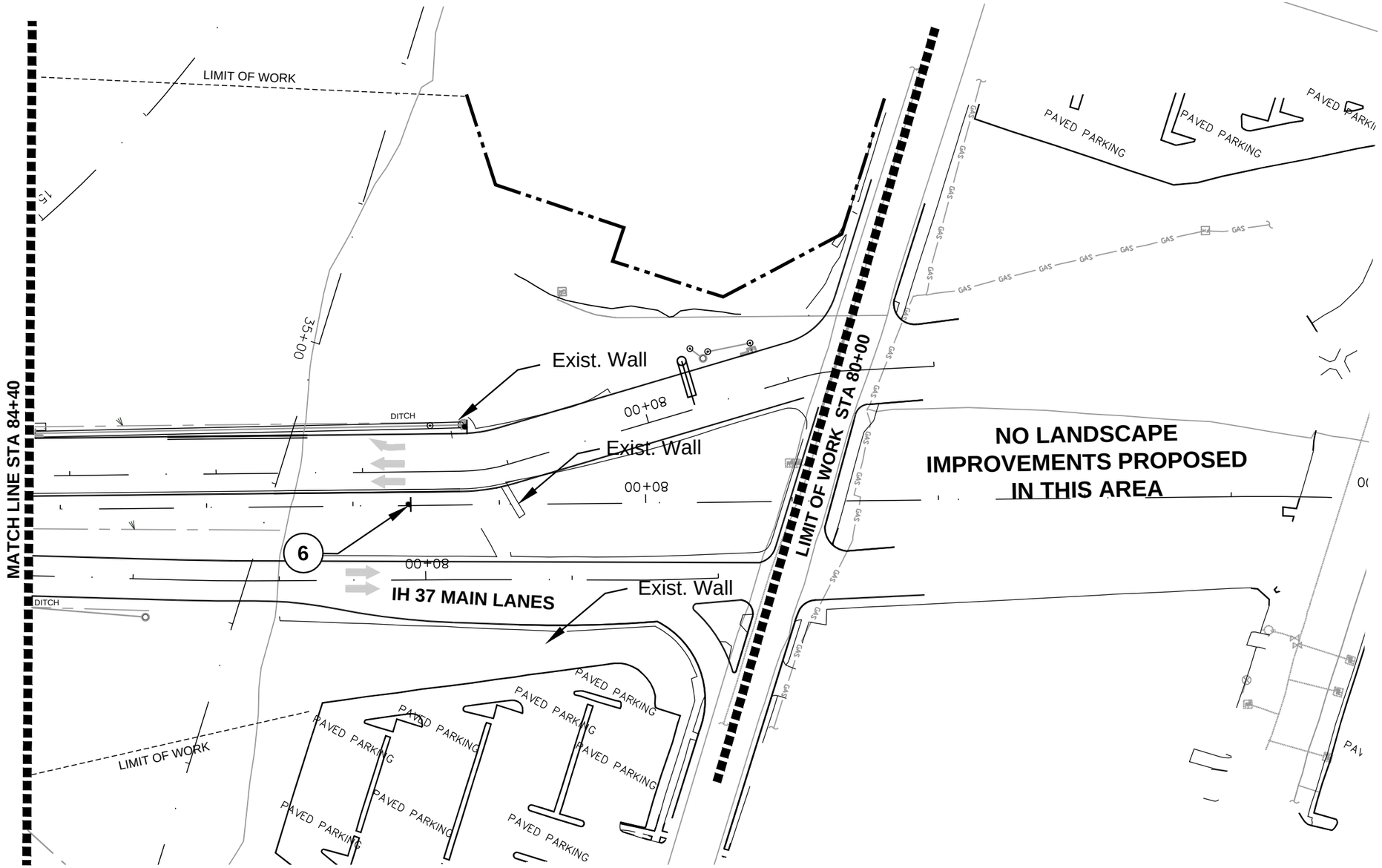

DRAWING LEGEND:

DETAIL REFERENCE

3

0 20 40 80

SCALE 1" = 80'

DETAIL NOTES:

1. **NOT USED**
2. CONCRETE LANDSCAPE CURB, **SEE CONSTRUCTION DETAILS SHEET 3 OF 10**
3. CONCRETE RIP RAP, **SEE CIVIL ENGINEERING DRAWINGS**
4. ACCESS RAMP, **SEE SITE CIVIL ENGINEERING DRAWINGS**
5. SIDEWALK, **SEE SITE CIVIL ENGINEERING DRAWINGS**
6. STREET SIGN- TYPICAL

GENERAL NOTES:

1. SEE LANDSCAPE GENERAL NOTES SHEET 1 OF 1 FOR ADDITIONAL INFORMATION

SHEET QUANTITIES - LAYOUT

ITEM	DESCRIPTION	UNIT	QNTY.
0529-6033	CONCRETE CURB (LANDSCAPE)	LF	0

STATE OF TEXAS
MICHAEL P. MAUER
1510
REGISTERED
LANDSCAPE ARCHITECT
April 6, 2021

FLATIRON/DRAGADOS LLC

M2L Associates Inc.
Houston, Texas 77024
T: 713-722-8897 F: 713-722-8048
Landscape Architecture • Land Planning • Urban Design

Texas Department of Transportation ® 2016

US 181 HARBOR BRIDGE

LAYOUT PLAN

IH 37
(STA 84+40 - 80+00)

SHEET 11 OF 11

DESIGN	FED.RD. DIV.NO.	FEDERAL AID PROJECT NO.		HIGHWAY NO.
GRAPHICS	X	(See Title Sheet)		
	STATE	DISTRICT	COUNTY	SHEET NO.
CHECK	TEXAS	CRP	NUECES	A111
	CONTROL	SECTION	JOB	
CHECK	0101	06	095	21

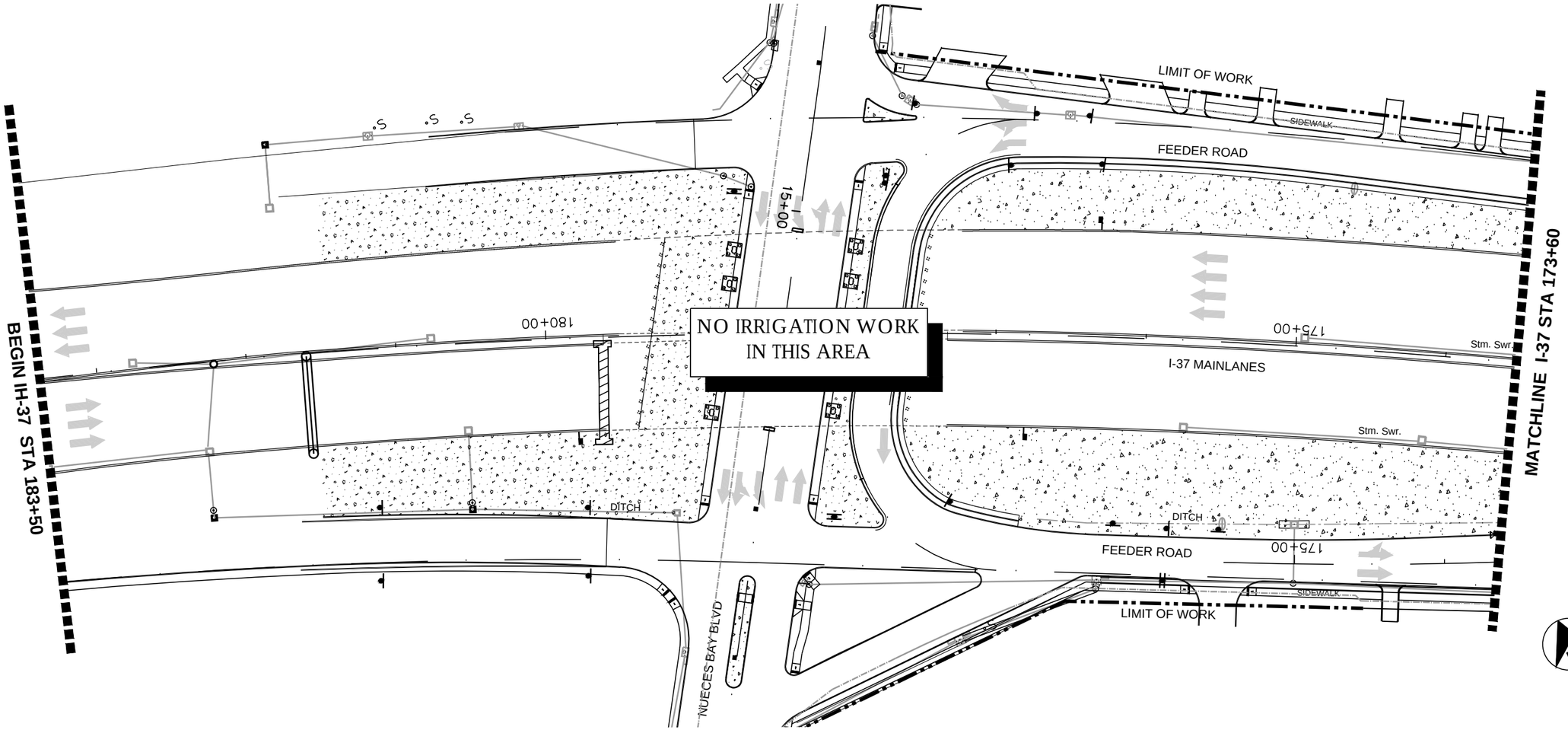

IRRIGATION CONNECTION DIAGRAM

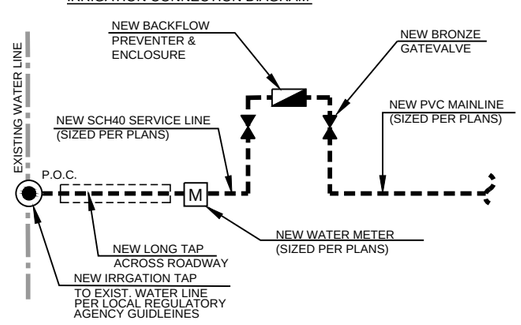

GENERAL NOTES:

1. SEE LANDSCAPE GENERAL NOTES SHEET 1 OF 1 FOR ADDITIONAL INFORMATION
2. SEE IRRIGATION DETAILS SHEETS
3. IRRIGATION SYSTEM PAID FOR UNDER 0170-6002
4. DRIP IRRIGATION ZONE TYPICAL
5. TREE DRIP SYSTEM- TYPICAL

IRRIGATION LEGEND

- CLASS 315 LATERAL
- SCH-40 PVC MAINLINE
- 1 6" SCH-40 PVC SLEEVE/BORE
- 2 4" SCH-40 PVC SLEEVE/BORE
- TREE DRIP SYSTEM
- SHRUB GROUND COVER DRIP SYSTEM
- HUNTER ICV SERIES VALVE(SIZE AS NOTED)
- GATE VALVE
- POINT OF CONNECTION, ***SEE DIAGRAM, THIS SHEET***
- C XC HYBRID CONTROLLER
- MS RAIN MOISTURE SENSOR
- A2 / 1.0" / 15.0 GPM — CONTROLLER NUMBER; ZONE NUMBER; ZONE GALLONAGE PER MINUTE - ACTUAL; VALVE SIZE (INCHES)

STATE OF TEXAS
MICHAEL P. MAUER
1510
REGISTERED LANDSCAPE ARCHITECT
April 6, 2021

FLATIRON/DRAGADOS LLC

M2L Associates Inc.
Houston, Texas 77024
T: 713-722-8897 F: 713-722-8048
Landscape Architecture • Land Planning • Urban Design

Texas Department of Transportation ® 2016

US 181 HARBOR BRIDGE

IRRIGATION PLAN

IH 37
(STA 183+50 -173+60)

SHEET 1 OF 11

DESIGN	FED.RD. DIV.NO.	FEDERAL AID PROJECT NO.		HIGHWAY NO.
GRAPHICS	X	(See Title Sheet)		
	STATE	DISTRICT	COUNTY	SHEET NO.
CHECK	TEXAS	CRP	NUECES	A 201
CHECK	CONTROL	SECTION	JOB	
	0101	06	095	22

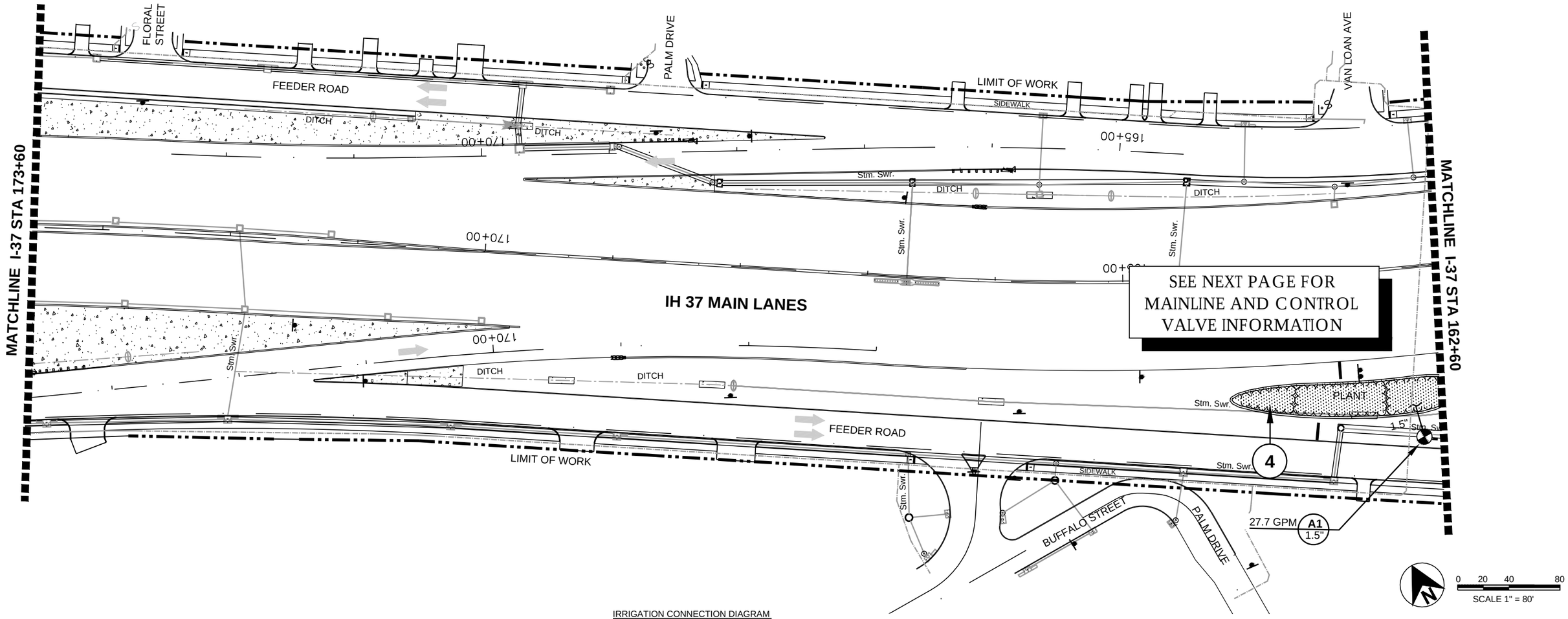

IRRIGATION CONNECTION DIAGRAM

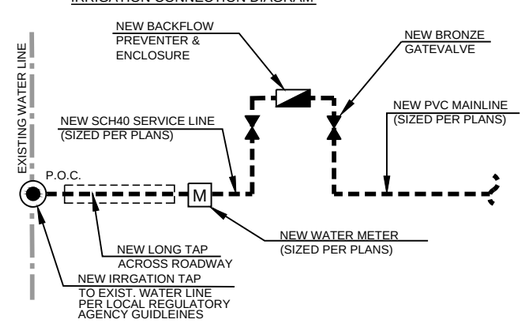

GENERAL NOTES:

1. SEE LANDSCAPE GENERAL NOTES SHEET 1 OF 1 FOR ADDITIONAL INFORMATION
2. SEE IRRIGATION DETAILS SHEETS
3. IRRIGATION SYSTEM PAID FOR UNDER 0170-6002
4. DRIP IRRIGATION ZONE TYPICAL
5. TREE DRIP SYSTEM- TYPICAL

IRRIGATION LEGEND

- CLASS 315 LATERAL
- SCH-40 PVC MAINLINE
- 1 — 6" SCH-40 PVC SLEEVE/BORE
- 2 — 4" SCH-40 PVC SLEEVE/BORE
- TREE DRIP SYSTEM
- SHRUB GROUND COVER DRIP SYSTEM
- HUNTER ICV SERIES VALVE(SIZE AS NOTED)
- GATE VALVE
- POINT OF CONNECTION, ***SEE DIAGRAM, THIS SHEET***
- C — XC HYBRID CONTROLLER
- MS — RAIN MOISTURE SENSOR

A2 / 1.0" / 15.0 GPM
- CONTROLLER NUMBER
- ZONE NUMBER
- ZONE GALLONAGE PER MINUTE - ACTUAL
- VALVE SIZE (INCHES)

STATE OF TEXAS
MICHAEL P. MAUER
1510
REGISTERED LANDSCAPE ARCHITECT
April 6, 2021

FLATIRON/DRAGADOS LLC

M2L Associates Inc.
Houston, Texas 77024
T: 713-722-8897 F: 713-722-8048
Landscape Architecture • Land Planning • Urban Design

Texas Department of Transportation ® 2016

US 181 HARBOR BRIDGE

IRRIGATION PLAN

IH 37
(STA 173+60 -162+60)

SHEET 2 OF 11

DESIGN	FED.RD. DIV.NO.	FEDERAL AID PROJECT NO.		HIGHWAY NO.
GRAPHICS	X	(See Title Sheet)		
	STATE	DISTRICT	COUNTY	SHEET NO.
CHECK	TEXAS	CRP	NUECES	A 202
CHECK	CONTROL	SECTION	JOB	23
	0101	06	095	

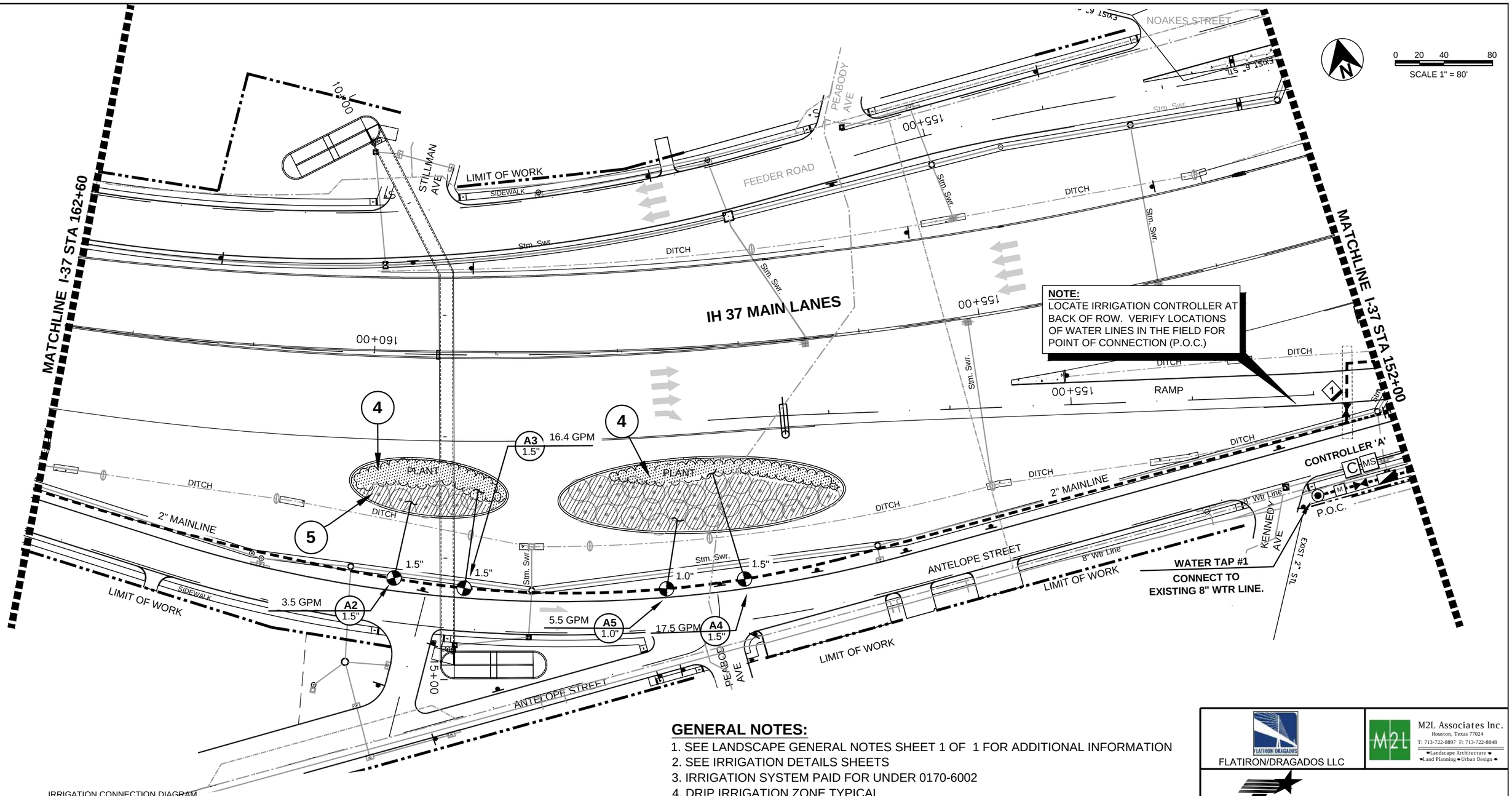

GENERAL NOTES:

1. SEE LANDSCAPE GENERAL NOTES SHEET 1 OF 1 FOR ADDITIONAL INFORMATION
2. SEE IRRIGATION DETAILS SHEETS
3. IRRIGATION SYSTEM PAID FOR UNDER 0170-6002
4. DRIP IRRIGATION ZONE TYPICAL
5. TREE DRIP SYSTEM- TYPICAL

IRRIGATION CONNECTION DIAGRAM

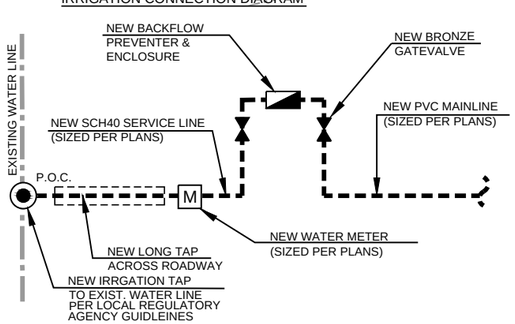

IRRIGATION LEGEND

- CLASS 315 LATERAL
- SCH-40 PVC MAINLINE
- 1 — 6" SCH-40 PVC SLEEVE/BORE
- 2 — 4" SCH-40 PVC SLEEVE/BORE
- TREE DRIP SYSTEM
- SHRUB GROUND COVER DRIP SYSTEM
- HUNTER ICV SERIES VALVE(SIZE AS NOTED)
- GATE VALVE
- POINT OF CONNECTION, ***SEE DIAGRAM, THIS SHEET***
- C — XC HYBRID CONTROLLER
- MS — RAIN MOISTURE SENSOR
- A2 / 1.0" / 15.0 GPM — CONTROLLER NUMBER; ZONE NUMBER; ZONE GALLONAGE PER MINUTE - ACTUAL; VALVE SIZE (INCHES)

STATE OF TEXAS
MICHAEL P. MAUER
1510
REGISTERED LANDSCAPE ARCHITECT
April 6, 2021

FLATIRON/DRAGADOS LLC

M2L Associates Inc.
Houston, Texas 77024
T: 713-722-8897 F: 713-722-8048
Landscape Architecture • Land Planning • Urban Design

Texas Department of Transportation ® 2016

US 181 HARBOR BRIDGE

IRRIGATION PLAN

IH 37
(STA 162+60 -152+00)

SHEET 3 OF 11

DESIGN	FED.RD. DIV.NO.	FEDERAL AID PROJECT NO.		HIGHWAY NO.
GRAPHICS	X	(See Title Sheet)		
	STATE	DISTRICT	COUNTY	SHEET NO.
CHECK	TEXAS	CRP	NUECES	A 203
CHECK	CONTROL	SECTION	JOB	24
	0101	06	095	

MATCHLINE I-37 STA 152+00

MATCHLINE I-37 STA 141+00

add
3858

IH 37 MAIN LANES

LIMIT OF WORK

FEEDER ROAD

KENNEDY AVE

LEXINGTON AVE

NORTH PORT AVE

RAMP

DITCH

PLANT

23.6 GPM A7 1.5"

33.2 GPM A6 1.5"

11.0 GPM A8 1.5"

2" MAINLINE

1.5"

8" Wtr Line

Stm. Swr.

SIDEWALK

150+00

145+00

25+00

20+00

0 20 40 80

SCALE 1" = 80'

IRRIGATION CONNECTION DIAGRAM

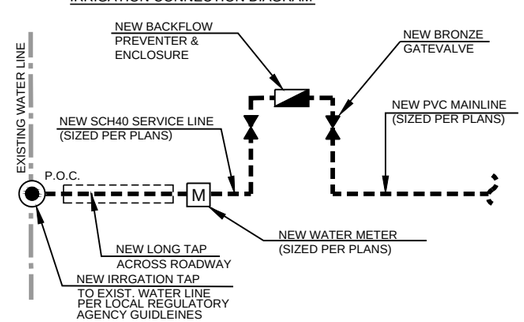

GENERAL NOTES:

1. SEE LANDSCAPE GENERAL NOTES SHEET 1 OF 1 FOR ADDITIONAL INFORMATION
2. SEE IRRIGATION DETAILS SHEETS
3. IRRIGATION SYSTEM PAID FOR UNDER 0170-6002
4. DRIP IRRIGATION ZONE TYPICAL
5. TREE DRIP SYSTEM- TYPICAL

IRRIGATION LEGEND

- CLASS 315 LATERAL
- SCH-40 PVC MAINLINE
- 1 6" SCH-40 PVC SLEEVE/BORE
- 2 4" SCH-40 PVC SLEEVE/BORE
- TREE DRIP SYSTEM
- SHRUB GROUND COVER DRIP SYSTEM
- HUNTER ICV SERIES VALVE(SIZE AS NOTED)
- GATE VALVE
- POINT OF CONNECTION, ***SEE DIAGRAM, THIS SHEET***
- C XC HYBRID CONTROLLER
- MS RAIN MOISTURE SENSOR

A2 1.0" 15.0 GPM
- CONTROLLER NUMBER
- ZONE NUMBER
- ZONE GALLONAGE PER MINUTE - ACTUAL
- VALVE SIZE (INCHES)

STATE OF TEXAS
MICHAEL P. MAUER
1510
REGISTERED LANDSCAPE ARCHITECT
April 6, 2021

FLATIRON/DRAGADOS LLC

M2L Associates Inc.
Houston, Texas 77024
T: 713-722-8897 F: 713-722-8048
Landscape Architecture • Land Planning • Urban Design

Texas Department of Transportation ® 2016

US 181 HARBOR BRIDGE

IRRIGATION PLAN

IH 37
(STA 152+00 -141+00)

SHEET 4 OF 11

DESIGN	FED.RD. DIV.NO.	FEDERAL AID PROJECT NO.		HIGHWAY NO.
GRAPHICS	X	(See Title Sheet)		
	STATE	DISTRICT	COUNTY	SHEET NO.
CHECK	TEXAS	CRP	NUECES	A 204
CHECK	CONTROL	SECTION	JOB	25
	0101	06	095	

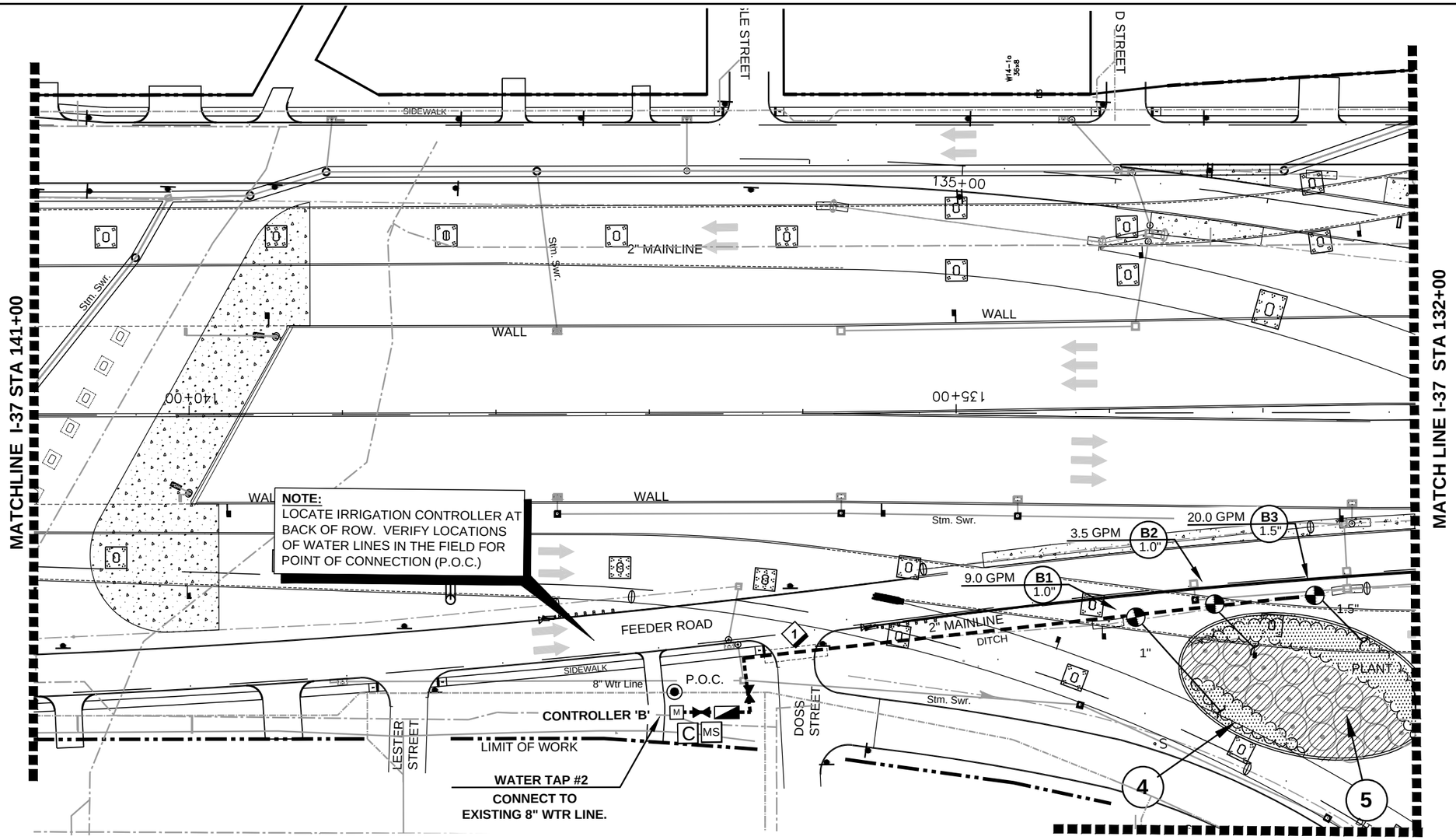

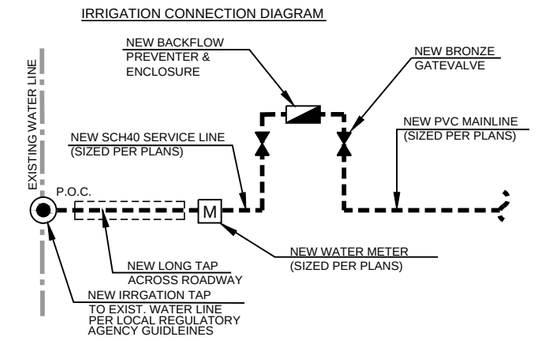

N

0 20 40 80

SCALE 1" = 80'

GENERAL NOTES:

1. SEE LANDSCAPE GENERAL NOTES SHEET 1 OF 1 FOR ADDITIONAL INFORMATION
2. SEE IRRIGATION DETAILS SHEETS
3. IRRIGATION SYSTEM PAID FOR UNDER 0170-6002
4. DRIP IRRIGATION ZONE TYPICAL
5. TREE DRIP SYSTEM- TYPICAL

IRRIGATION LEGEND

- CLASS 315 LATERAL
- SCH-40 PVC MAINLINE
- 1 — 6" SCH-40 PVC SLEEVE/BORE
- 2 — 4" SCH-40 PVC SLEEVE/BORE
- TREE DRIP SYSTEM
- SHRUB GROUND COVER DRIP SYSTEM
- HUNTER ICV SERIES VALVE(SIZE AS NOTED)
- GATE VALVE
- POINT OF CONNECTION, ***SEE DIAGRAM, THIS SHEET***
- C — XC HYBRID CONTROLLER
- MS — RAIN MOISTURE SENSOR

A2 — CONTROLLER NUMBER
15.0 GPM — ZONE NUMBER; ZONE GALLONAGE PER MINUTE - ACTUAL
1.0" — VALVE SIZE (INCHES)

STATE OF TEXAS
MICHAEL P. MAUER
1510
REGISTERED LANDSCAPE ARCHITECT
April 6, 2021

FLATIRON/DRAGADOS LLC

M2L Associates Inc.
Houston, Texas 77024
T: 713-722-8897 F: 713-722-8048
Landscape Architecture • Land Planning • Urban Design

Texas Department of Transportation ® 2016

US 181 HARBOR BRIDGE

IRRIGATION PLAN

IH 37
(STA 141+00 -132+00)

SHEET 5 OF 11

DESIGN	FED.RD. DIV.NO.	FEDERAL AID PROJECT NO.		HIGHWAY NO.
GRAPHICS	X	(See Title Sheet)		
	STATE	DISTRICT	COUNTY	SHEET NO.
CHECK	TEXAS	CRP	NUECES	A 205
CHECK	CONTROL	SECTION	JOB	
	0101	06	095	26

MATCH LINE US181 STA 1159+00 (SEE US181 1159+00 - 1155+00

MATCHLINE I-37 STA 132+00

MATCH LINE IH-37 STA 122+00

IH 37 MAIN LANES

DETENTION BASIN

US 181 MAIN LANES

FEEDER ROAD

LIMIT OF WORK

RAMP

DITCH

Stm. Swr.

SWLP02

SWLP08

130+00

125+00

120+00

115+00

110+00

105+00

10+00

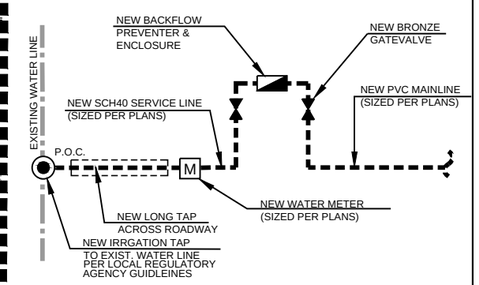

GENERAL NOTES:

1. SEE LANDSCAPE GENERAL NOTES SHEET 1 OF 1 FOR ADDITIONAL INFORMATION
2. SEE IRRIGATION DETAILS SHEETS
3. IRRIGATION SYSTEM PAID FOR UNDER 0170-6002
4. DRIP IRRIGATION ZONE TYPICAL
5. TREE DRIP SYSTEM- TYPICAL

MATCH LINE SH286 STA 1165+98 (SEE SH286)

IRRIGATION LEGEND

- CLASS 315 LATERAL
- SCH-40 PVC MAINLINE
- 1 6" SCH-40 PVC SLEEVE/BORE
- 2 4" SCH-40 PVC SLEEVE/BORE
- TREE DRIP SYSTEM
- SHRUB GROUND COVER DRIP SYSTEM
- HUNTER ICV SERIES VALVE(SIZE AS NOTED)
- GATE VALVE
- POINT OF CONNECTION, ***SEE DIAGRAM, THIS SHEET***
- C XC HYBRID CONTROLLER
- MS RAIN MOISTURE SENSOR

A2 / 1.0" — 15.0 GPM

- CONTROLLER NUMBER
- ZONE NUMBER
- ZONE GALLONAGE PER MINUTE - ACTUAL
- VALVE SIZE (INCHES)

STATE OF TEXAS
MICHAEL P. MAUER
1510
REGISTERED LANDSCAPE ARCHITECT
April 6, 2021

FLATIRON/DRAGADOS LLC

M2L Associates Inc.
Houston, Texas 77024
T: 713-722-8897 F: 713-722-8048
Landscape Architecture • Land Planning • Urban Design

Texas Department of Transportation ® 2016

US 181 HARBOR BRIDGE

IRRIGATION PLAN

IH 37
(STA 132+00 -122+00)

SHEET 6 OF 11

DESIGN	FED.RD. DIV.NO.	FEDERAL AID PROJECT NO.		HIGHWAY NO.
GRAPHICS	X	(See Title Sheet)		
	STATE	DISTRICT	COUNTY	SHEET NO.
CHECK	TEXAS	CRP	NUECES	A 206
CHECK	CONTROL	SECTION	JOB	27
	0101	06	095	

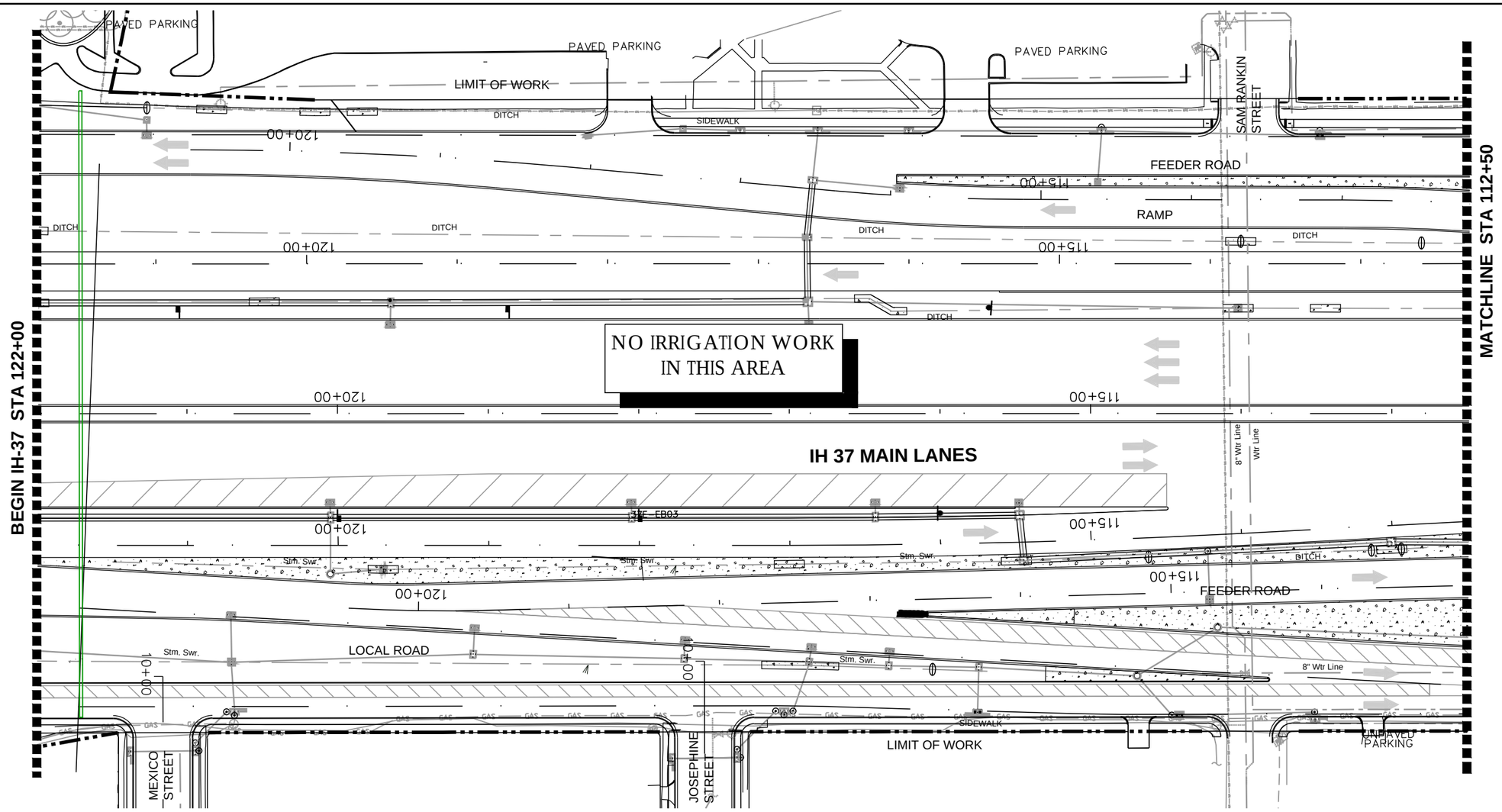

IRRIGATION CONNECTION DIAGRAM

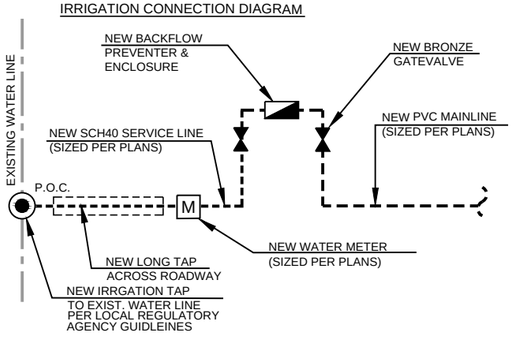

GENERAL NOTES:

1. SEE LANDSCAPE GENERAL NOTES SHEET 1 OF 1 FOR ADDITIONAL INFORMATION
2. SEE IRRIGATION DETAILS SHEETS
3. IRRIGATION SYSTEM PAID FOR UNDER 0170-6002
4. DRIP IRRIGATION ZONE TYPICAL
5. TREE DRIP SYSTEM - TYPICAL

IRRIGATION LEGEND

- CLASS 315 LATERAL
- SCH-40 PVC MAINLINE
- 1 6" SCH-40 PVC SLEEVE/BORE
- 2 4" SCH-40 PVC SLEEVE/BORE
- TREE DRIP SYSTEM
- SHRUB GROUND COVER DRIP SYSTEM
- HUNTER ICV SERIES VALVE(SIZE AS NOTED)
- GATE VALVE
- POINT OF CONNECTION, ***SEE DIAGRAM, THIS SHEET***
- C XC HYBRID CONTROLLER
- MS RAIN MOISTURE SENSOR
- A2 / 1.0" — 15.0 GPM
  - CONTROLLER NUMBER
  - ZONE NUMBER
  - ZONE GALLONAGE PER MINUTE - ACTUAL
  - VALVE SIZE (INCHES)

STATE OF TEXAS
MICHAEL P. MAUER
1510
REGISTERED LANDSCAPE ARCHITECT
April 6, 2021

FLATIRON/DRAGADOS LLC

M2L Associates Inc.
Houston, Texas 77024
T: 713-722-8897 F: 713-722-8048
Landscape Architecture • Land Planning • Urban Design

Texas Department of Transportation ® 2016

US 181 HARBOR BRIDGE

IRRIGATION PLAN

IH 37
(STA 122+00 -112+50)

SHEET 7 OF 11

DESIGN	FED.RD. DIV.NO.	FEDERAL AID PROJECT NO.		HIGHWAY NO.
GRAPHICS	X	(See Title Sheet)		
	STATE	DISTRICT	COUNTY	SHEET NO.
CHECK	TEXAS	CRP	NUECES	A207
CHECK	CONTROL	SECTION	JOB	
	0101	06	095	28

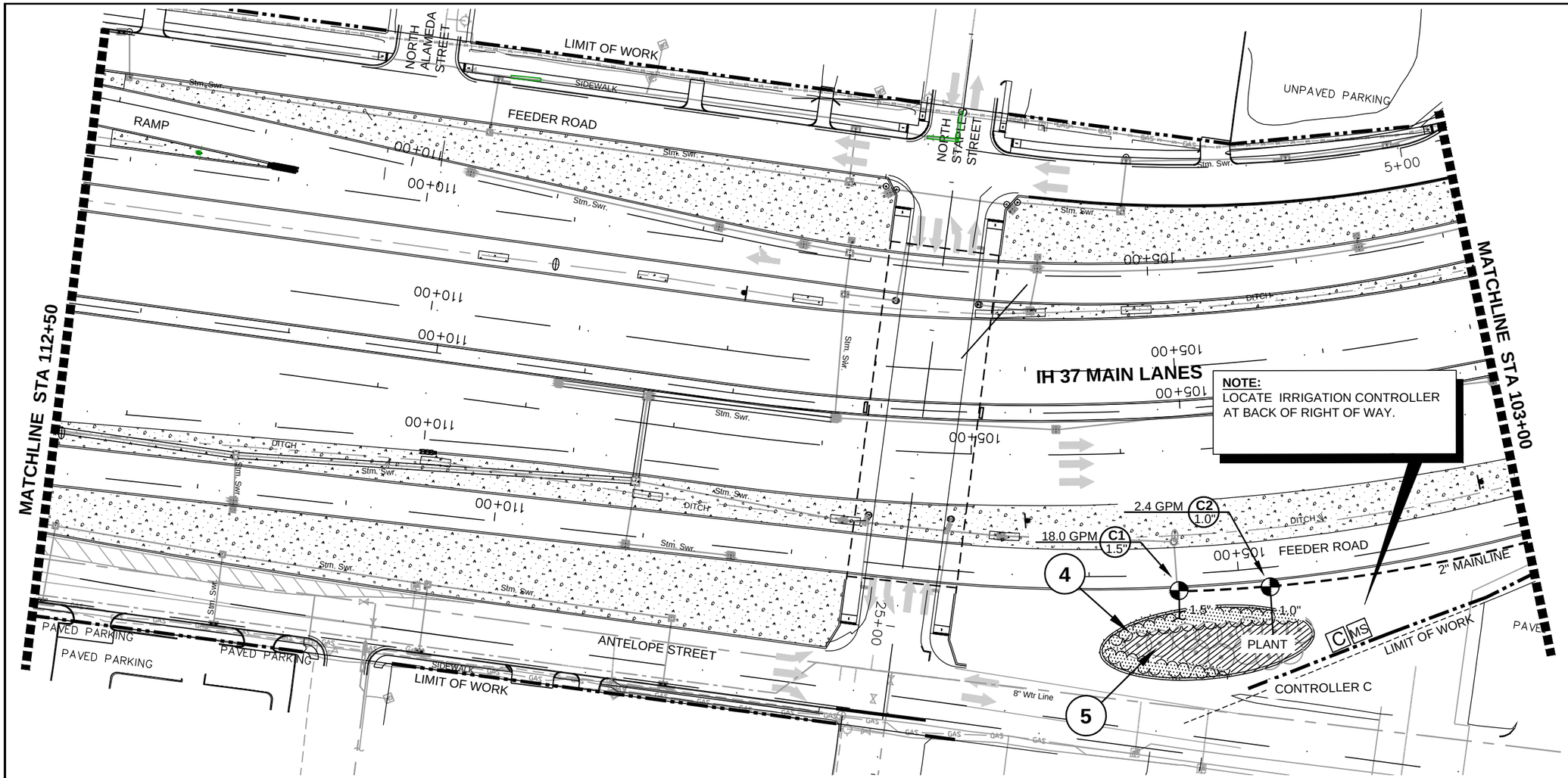

0 20 40 80
SCALE 1" = 80'

IRRIGATION CONNECTION DIAGRAM

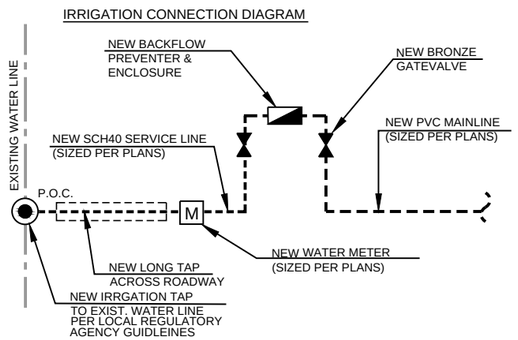

GENERAL NOTES:

1. SEE LANDSCAPE GENERAL NOTES SHEET 1 OF 1 FOR ADDITIONAL INFORMATION
2. SEE IRRIGATION DETAILS SHEETS
3. IRRIGATION SYSTEM PAID FOR UNDER 0170-6002
4. DRIP IRRIGATION ZONE TYPICAL
5. TREE DRIP SYSTEM - TYPICAL

IRRIGATION LEGEND

- CLASS 315 LATERAL
- SCH-40 PVC MAINLINE
- 1 6" SCH-40 PVC SLEEVE/BORE
- 2 4" SCH-40 PVC SLEEVE/BORE
- TREE DRIP SYSTEM
- SHRUB GROUND COVER DRIP SYSTEM
- HUNTER ICV SERIES VALVE(SIZE AS NOTED)
- GATE VALVE
- POINT OF CONNECTION, ***SEE DIAGRAM, THIS SHEET***
- C XC HYBRID CONTROLLER
- MS RAIN MOISTURE SENSOR

A2 15.0 GPM 1.0"
- CONTROLLER NUMBER
- ZONE NUMBER
- ZONE GALLONAGE PER MINUTE - ACTUAL
- VALVE SIZE (INCHES)

STATE OF TEXAS
MICHAEL P. MAUER
1510
REGISTERED LANDSCAPE ARCHITECT
April 6, 2021

FLATIRON/DRAGADOS LLC

M2L Associates Inc.
Houston, Texas 77024
T: 713-722-8897 F: 713-722-8048
Landscape Architecture • Land Planning • Urban Design

Texas Department of Transportation ® 2016

US 181 HARBOR BRIDGE

IRRIGATION PLAN

IH 37
(STA 112+50 -103+00)

SHEET 8 OF 11

DESIGN	FED.RD. DIV.NO.	FEDERAL AID PROJECT NO.		HIGHWAY NO.
	X	(See Title Sheet)		
GRAPHICS	STATE	DISTRICT	COUNTY	SHEET NO.
CHECK	TEXAS	CRP	NUECES	A208
CHECK	CONTROL	SECTION	JOB	
	0101	06	095	29

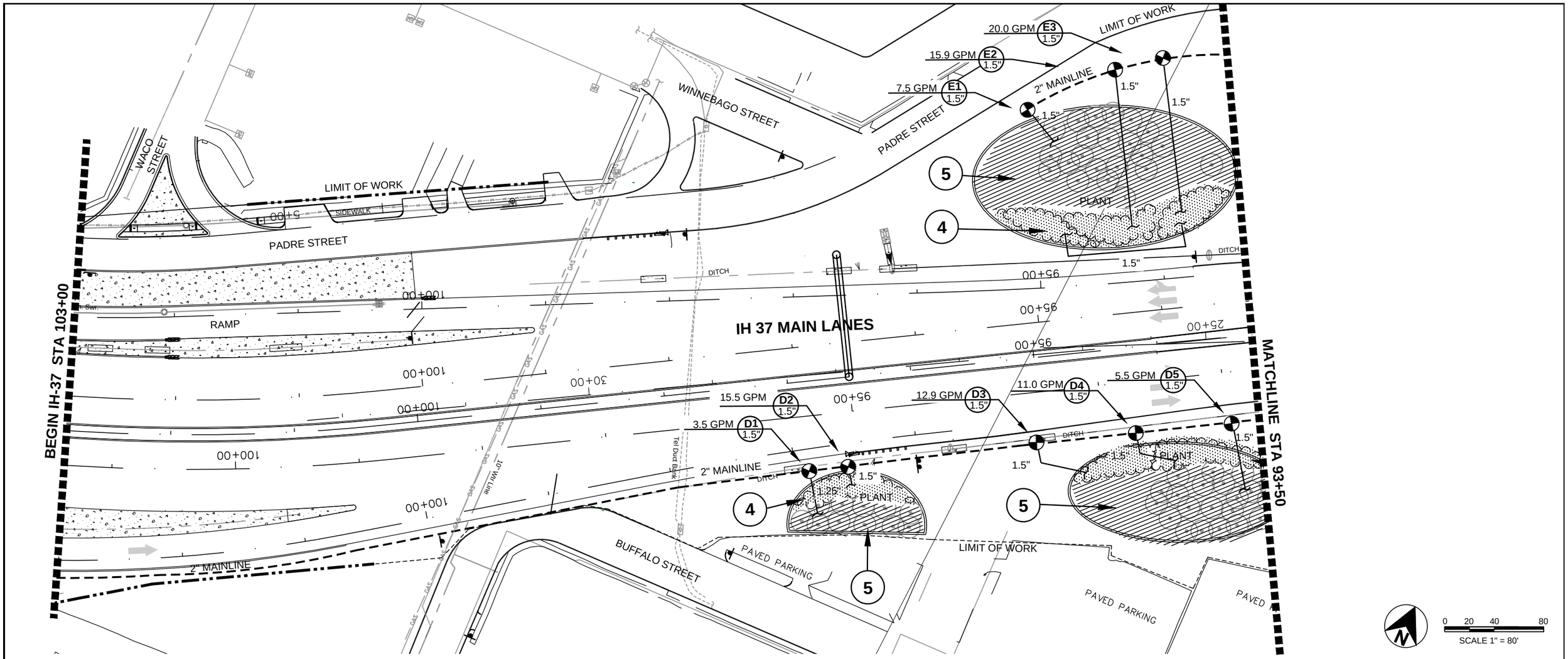

IRRIGATION CONNECTION DIAGRAM

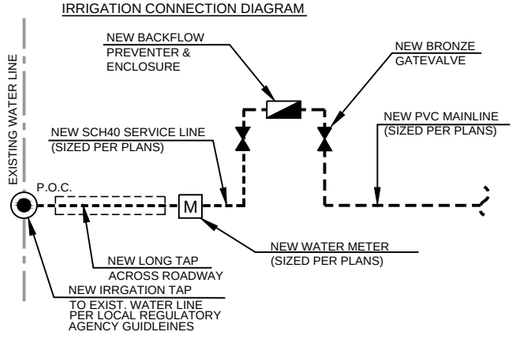

GENERAL NOTES:

1. SEE LANDSCAPE GENERAL NOTES SHEET 1 OF 1 FOR ADDITIONAL INFORMATION
2. SEE IRRIGATION DETAILS SHEETS
3. IRRIGATION SYSTEM PAID FOR UNDER 0170-6002
4. DRIP IRRIGATION ZONE TYPICAL
5. TREE DRIP SYSTEM - TYPICAL

IRRIGATION LEGEND

- CLASS 315 LATERAL
- SCH-40 PVC MAINLINE
- 1 6" SCH-40 PVC SLEEVE/BORE
- 2 4" SCH-40 PVC SLEEVE/BORE
- TREE DRIP SYSTEM
- SHRUB GROUND COVER DRIP SYSTEM
- HUNTER ICV SERIES VALVE(SIZE AS NOTED)
- GATE VALVE
- POINT OF CONNECTION, ***SEE DIAGRAM, THIS SHEET***
- C XC HYBRID CONTROLLER
- MS RAIN MOISTURE SENSOR
- A2 1.0" 15.0 GPM — CONTROLLER NUMBER; ZONE NUMBER; ZONE GALLONAGE PER MINUTE - ACTUAL; VALVE SIZE (INCHES)

STATE OF TEXAS
MICHAEL P. MAUER
1510
REGISTERED LANDSCAPE ARCHITECT
April 6, 2021

FLATIRON/DRAGADOS LLC

M2L Associates Inc.
Houston, Texas 77024
T: 713-722-8897 F: 713-722-8048
Landscape Architecture • Land Planning • Urban Design

Texas Department of Transportation ® 2016

US 181 HARBOR BRIDGE

IRRIGATION PLAN

IH 37
(STA 103+00 - 93+50)

SHEET 9 OF 11

DESIGN	FED.RD. DIV.NO.	FEDERAL AID PROJECT NO.		HIGHWAY NO.
GRAPHICS	X	(See Title Sheet)		
	STATE	DISTRICT	COUNTY	SHEET NO.
CHECK	TEXAS	CRP	NUECES	A209
CHECK	CONTROL	SECTION	JOB	
	0101	06	095	30

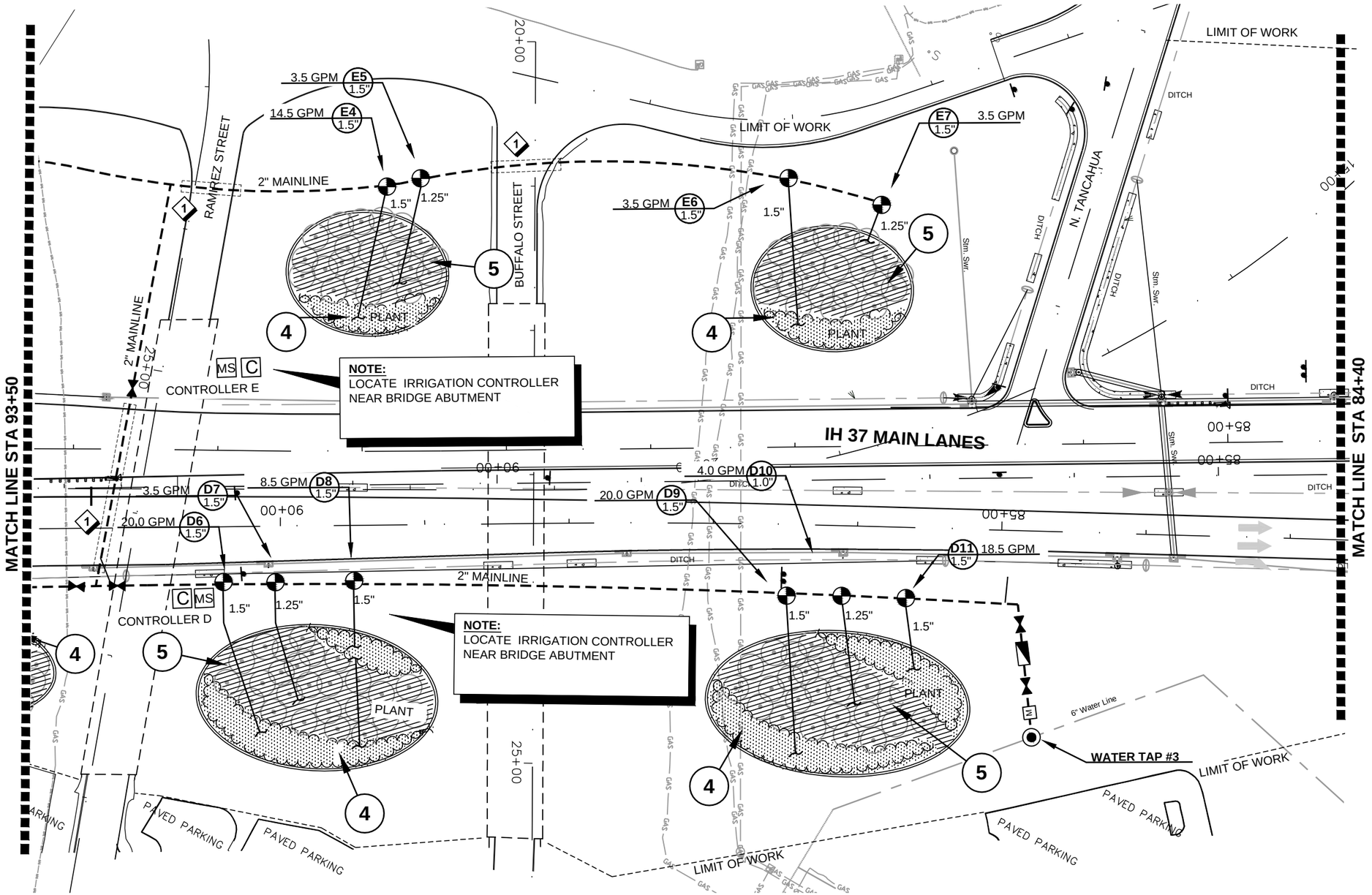

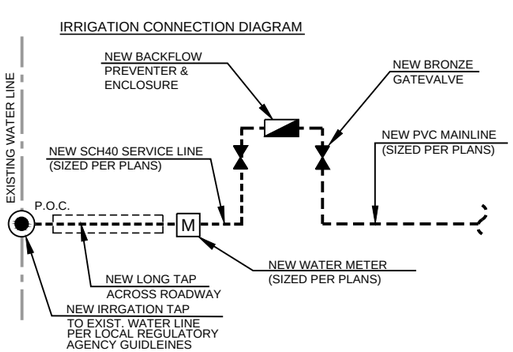

GENERAL NOTES:

1. SEE LANDSCAPE GENERAL NOTES SHEET 1 OF 1 FOR ADDITIONAL INFORMATION
2. SEE IRRIGATION DETAILS SHEETS
3. IRRIGATION SYSTEM PAID FOR UNDER 0170-6002
4. DRIP IRRIGATION ZONE TYPICAL
5. TREE DRIP SYSTEM - TYPICAL

IRRIGATION LEGEND

- CLASS 315 LATERAL
- SCH-40 PVC MAINLINE
- 1 6" SCH-40 PVC SLEEVE/BORE
- 2 4" SCH-40 PVC SLEEVE/BORE
- TREE DRIP SYSTEM
- SHRUB GROUND COVER DRIP SYSTEM
- HUNTER ICV SERIES VALVE(SIZE AS NOTED)
- GATE VALVE
- POINT OF CONNECTION, ***SEE DIAGRAM, THIS SHEET***
- C XC HYBRID CONTROLLER
- MS RAIN MOISTURE SENSOR
- A2 / 1.0" / 15.0 GPM — CONTROLLER NUMBER; ZONE NUMBER; ZONE GALLONAGE PER MINUTE - ACTUAL; VALVE SIZE (INCHES)

STATE OF TEXAS
MICHAEL P. MAUER
1510
REGISTERED LANDSCAPE ARCHITECT
April 6, 2021

0 20 40 80
SCALE 1" = 80'

FLATIRON/DRAGADOS LLC

M2L Associates Inc.
Houston, Texas 77024
T: 713-722-8897 F: 713-722-8048
Landscape Architecture • Land Planning • Urban Design

Texas Department of Transportation ® 2016

US 181 HARBOR BRIDGE

IRRIGATION PLAN

IH 37
(STA 93+50 - 84+40)

SHEET 10 OF 11

DESIGN	FED.RD. DIV.NO.	FEDERAL AID PROJECT NO.		HIGHWAY NO.
GRAPHICS	X	(See Title Sheet)		
	STATE	DISTRICT	COUNTY	SHEET NO.
CHECK	TEXAS	CRP	NUECES	A210
CHECK	CONTROL	SECTION	JOB	
	0101	06	095	31

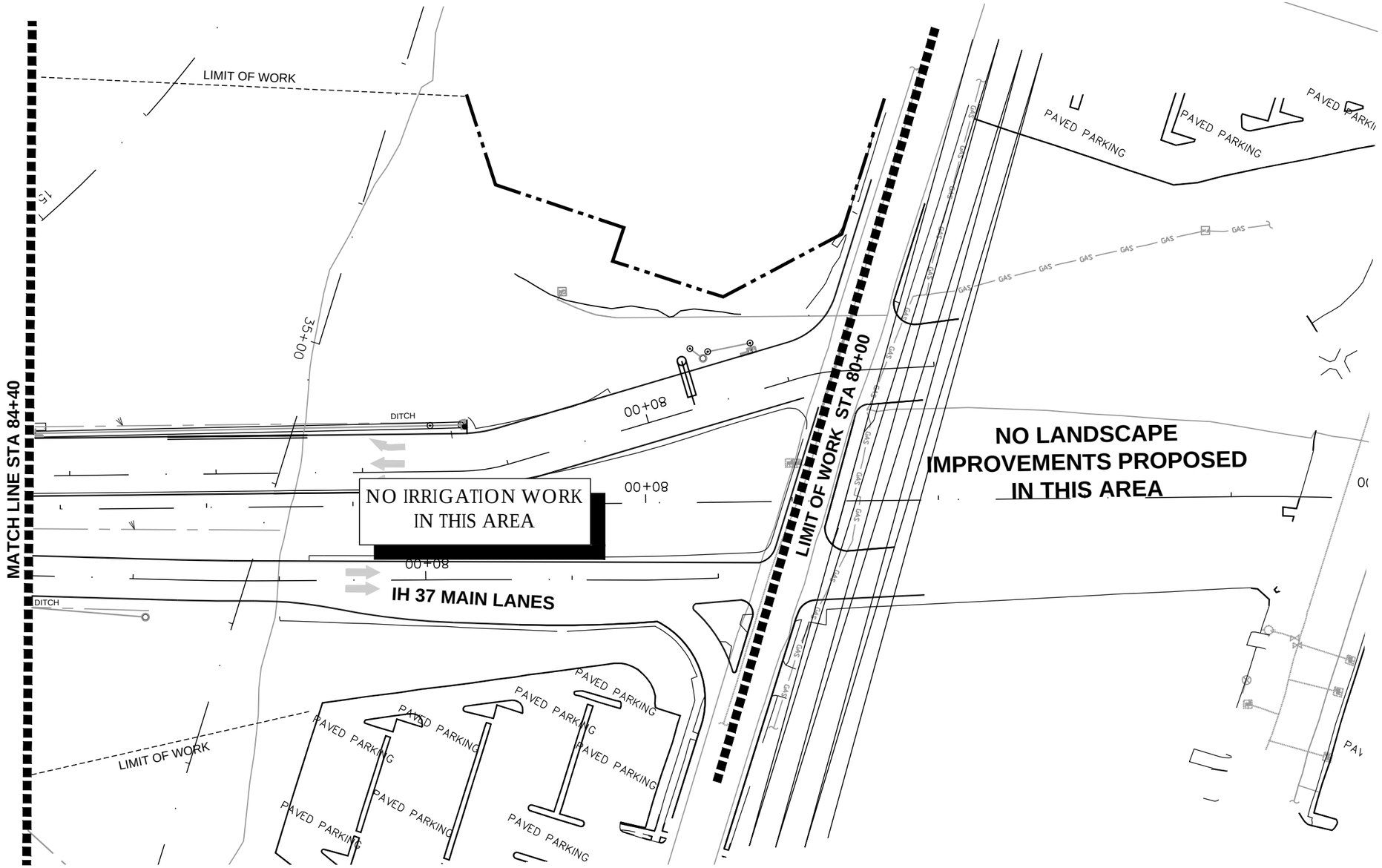

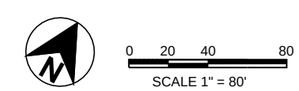

IRRIGATION CONNECTION DIAGRAM

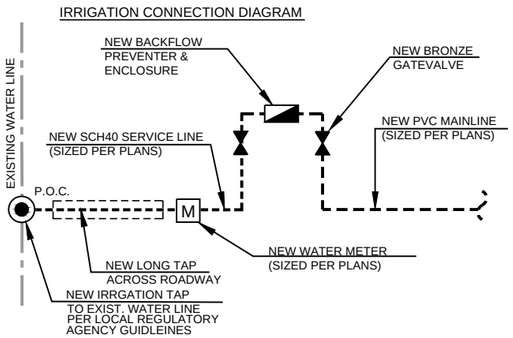

GENERAL NOTES:

1. SEE LANDSCAPE GENERAL NOTES SHEET 1 OF 1 FOR ADDITIONAL INFORMATION
2. SEE IRRIGATION DETAILS SHEETS
3. IRRIGATION SYSTEM PAID FOR UNDER 0170-6002
4. DRIP IRRIGATION ZONE TYPICAL
5. TREE DRIP SYSTEM - TYPICAL

IRRIGATION LEGEND

- CLASS 315 LATERAL
- SCH-40 PVC MAINLINE
- 1 6" SCH-40 PVC SLEEVE/BORE
- 2 4" SCH-40 PVC SLEEVE/BORE
- TREE DRIP SYSTEM
- SHRUB GROUND COVER DRIP SYSTEM
- HUNTER ICV SERIES VALVE(SIZE AS NOTED)
- GATE VALVE
- POINT OF CONNECTION, ***SEE DIAGRAM, THIS SHEET***
- C XC HYBRID CONTROLLER
- MS RAIN MOISTURE SENSOR
- A2 / 1.0" / 15.0 GPM — CONTROLLER NUMBER; ZONE NUMBER; ZONE GALLONAGE PER MINUTE - ACTUAL; VALVE SIZE (INCHES)

STATE OF TEXAS
MICHAEL P. MAUER
1510
REGISTERED LANDSCAPE ARCHITECT
April 6, 2021

FLATIRON/DRAGADOS LLC

M2L Associates Inc.
Houston, Texas 77024
T: 713-722-8897 F: 713-722-8048
Landscape Architecture
Land Planning • Urban Design

Texas Department of Transportation ©2016

US 181 HARBOR BRIDGE

IRRIGATION PLAN

IH 37
(STA 84+40 - 80+00)

SHEET 11 OF 11

DESIGN	FED.RD. DIV.NO.	FEDERAL AID PROJECT NO.		HIGHWAY NO.
GRAPHICS	X	(See Title Sheet)		
	STATE	DISTRICT	COUNTY	SHEET NO.
CHECK	TEXAS	CRP	NUECES	A211
CHECK	CONTROL	SECTION	JOB	
	0101	06	095	32

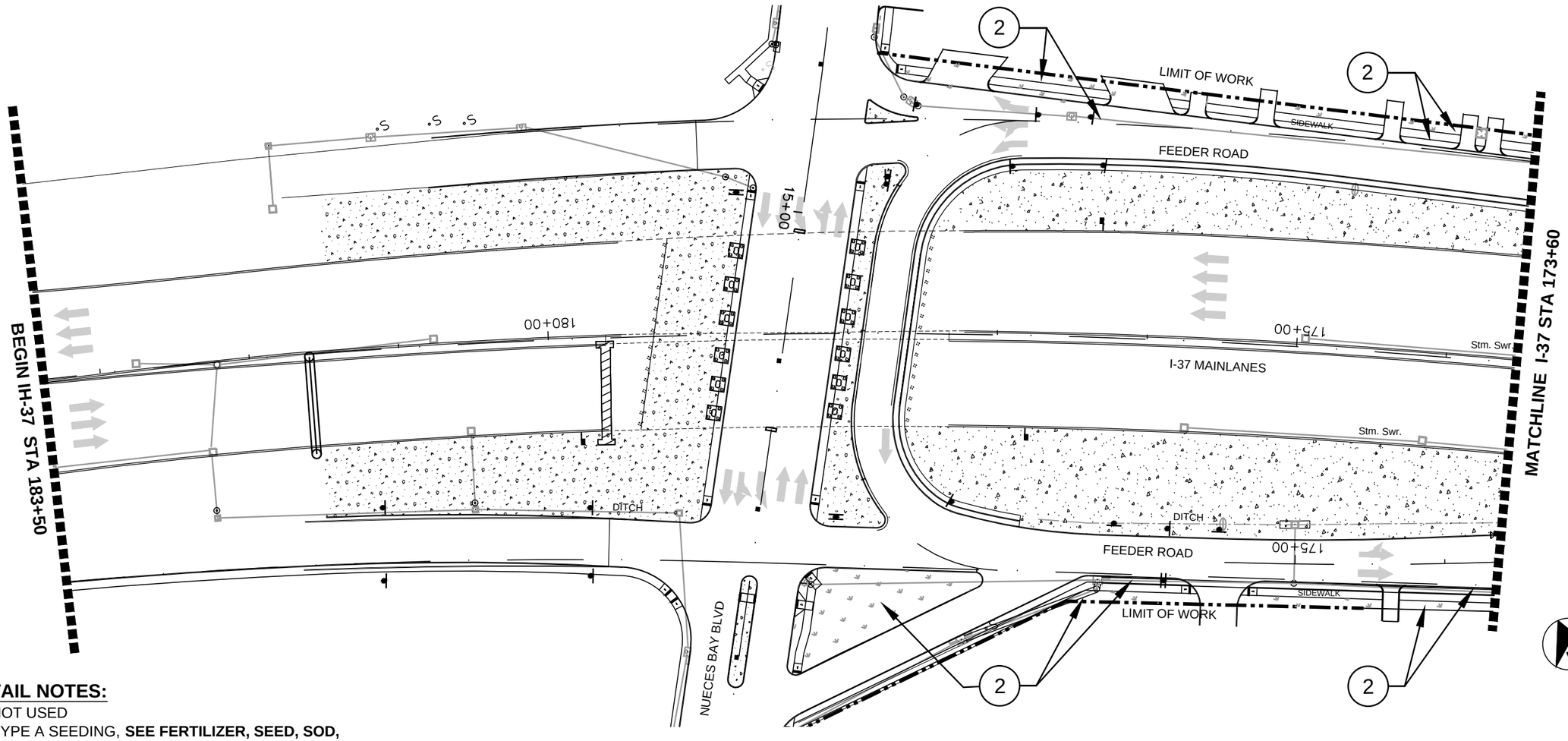

DETAIL NOTES:

1. NOT USED
2. TYPE A SEEDING, **SEE FERTILIZER, SEED, SOD, STRAW, COMPOST AND WATER, SHEET 1 OF 1**
3. NOT USED
4. **NOT USED**
5. 4" MULCH TOP DRESSING
6. TYPE B SEEDING, **SEE FERTILIZER, SEED, SOD, STRAW, COMPOST AND WATER, SHEET 1 OF 1**

GENERAL NOTES:

1. SEE LANDSCAPE GENERAL NOTES SHEET 1 OF 1 FOR ADDITIONAL INFORMATION

SHEET QUANTITIES - PLANTING

ITEM	DESCRIPTION	UNIT	QNTY.
0161-6012	GENERAL USE COMPOST	CY	62
0168-6001	VEGETATIVE WATERING	MG	55.3
0164-6066	DRILL SEEDING (PERM) (WARM OR COOL)	SY	2229
0164-6057	CELL FBR MLCH SEED(PERM)(SPECIAL MIX)	SY	0
0166-6001	FERTILIZER	AC	1.4
0192-6012	MULCH	CY	0
0162-6003	STRAW OR HAY MULCH	SY	2229
0192-6004	PLANT MATERIAL (3 GALLON) (SHRUB)	EA	0
0192-6026	PLANT MATERIAL (65 GALLON)(TREE)	EA	0
0192-6063	PLANT BED PREP (TYPE I)	SY	0
	NOT USED		0
0192-6065	PLANT BED PREP (TYPE III)	SY	0
0192-6066	PLANT BED PREP (TYPE IV)	SY	2229
1006-6001	LANDSCAPE SOIL AMENDMENT (TYPE I)	EA	0
1006-6002	LANDSCAPE SOIL AMENDMENT (TYPE II)	SY	2229
1006-6003	LANDSCAPE SOIL AMENDMENT (TYPE III)	SY	0
1006-6004	LANDSCAPE SOIL AMENDMENT (TYPE IV)	SY	0

DRAWING LEGEND:

TYPE A SEEDING - Permanent Drill Seeding (0164-6066) with Straw Mulch Cover (0162-6033)

TYPE B SEEDING - Permanent Cellulose Fiber Mulch Seeding (0164-6057)

CONCRETE RIP RAP - See Civil Engineering Drawings

BASE LANDSCAPE COMMITMENT

TYPE A/B SEEDING

0 TREES

0 SHRUBS / GROUND COVERS

DRAWING LEGEND:

T1 — PLANT MATERIAL SYMBOL

3 — QUANTITY

STATE OF TEXAS
MICHAEL P. MAUER
1510
REGISTERED LANDSCAPE ARCHITECT
APRIL 6, 2021

FLATIRON/DRAGADOS LLC

M2L Associates Inc.
Houston, Texas 77024
T: 713-722-8897 F: 713-722-8048
Landscape Architecture • Land Planning • Urban Design

Texas Department of Transportation ® 2016

US 181 HARBOR BRIDGE

PLANTING PLAN

IH 37
(STA 183+50 -173+60)

SHEET 1 OF 11

DESIGN	FED.RD. DIV.NO.	FEDERAL AID PROJECT NO.		HIGHWAY NO.
GRAPHICS	X	(See Title Sheet)		
	STATE	DISTRICT	COUNTY	SHEET NO.
CHECK	TEXAS	CRP	NUECES	A 301
CHECK	CONTROL	SECTION	JOB	33
	0101	06	095	

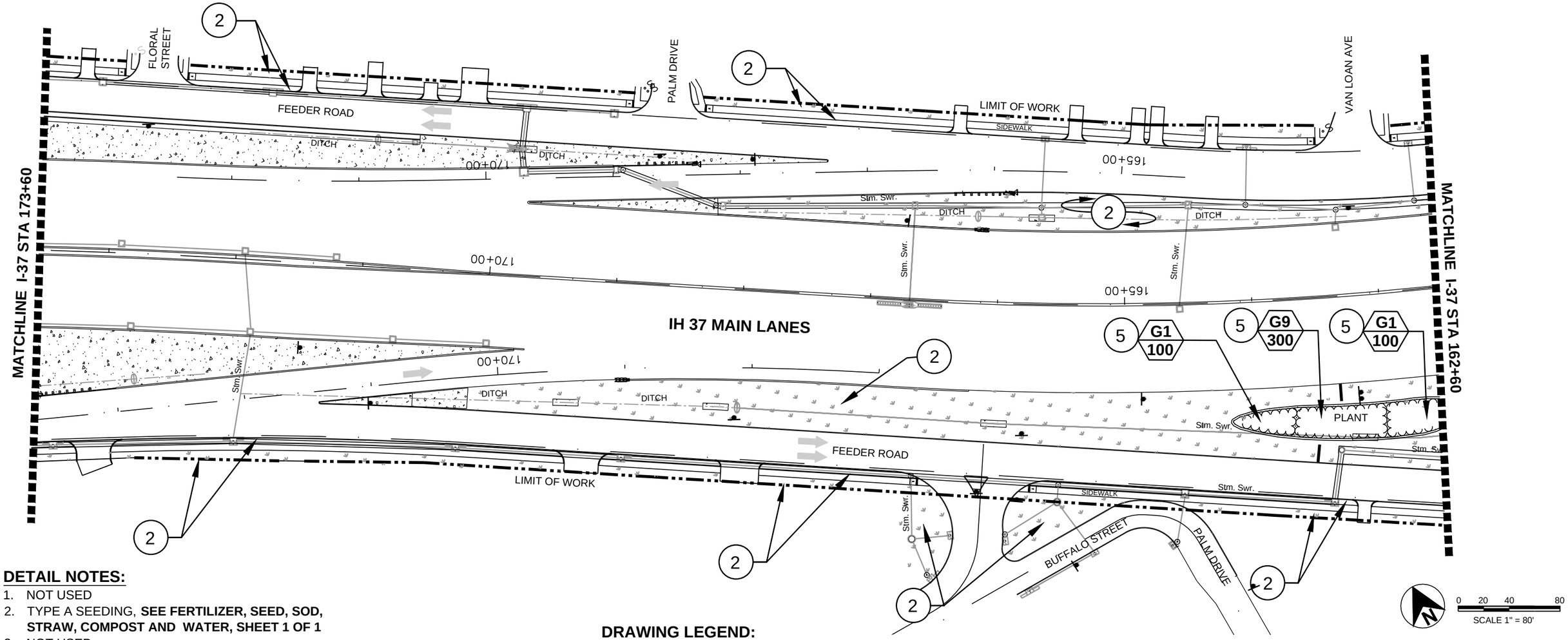

DETAIL NOTES:

1. NOT USED
2. TYPE A SEEDING, **SEE FERTILIZER, SEED, SOD, STRAW, COMPOST AND WATER, SHEET 1 OF 1**
3. NOT USED
4. **NOT USED**
5. 4" MULCH TOP DRESSING
6. TYPE B SEEDING, **SEE FERTILIZER, SEED, SOD, STRAW, COMPOST AND WATER, SHEET 1 OF 1**

GENERAL NOTES:

1. SEE LANDSCAPE GENERAL NOTES SHEET 1 OF 1 FOR ADDITIONAL INFORMATION

SHEET QUANTITIES - PLANTING

ITEM	DESCRIPTION	UNIT	QNTY.
0161-6012	GENERAL USE COMPOST	CY	240
0168-6001	VEGETATIVE WATERING	MG	166.5
0164-6066	DRILL SEEDING (PERM) (WARM OR COOL)	SY	6715
0164-6057	CELL FBR MLCH SEED(PERM)(SPECIAL MIX)	SY	0
0166-6001	FERTILIZER	AC	4.0
0192-6012	MULCH	CY	115
0162-6003	STRAW OR HAY MULCH	SY	6715
0192-6004	PLANT MATERIAL (3 GALLON) (SHRUB)	EA	500
0192-6026	PLANT MATERIAL (65 GALLON)(TREE)	EA	0
0192-6063	PLANT BED PREP (TYPE I)	SY	0
	NOT USED		
0192-6065	PLANT BED PREP (TYPE III)	SY	458
0192-6066	PLANT BED PREP (TYPE IV)	SY	6715
1006-6001	LANDSCAPE SOIL AMENDMENT (TYPE I)	EA	0
1006-6002	LANDSCAPE SOIL AMENDMENT (TYPE II)	SY	6715
1006-6003	LANDSCAPE SOIL AMENDMENT (TYPE III)	SY	0
1006-6004	LANDSCAPE SOIL AMENDMENT (TYPE IV)	SY	1374

DRAWING LEGEND:

TYPE A SEEDING - Permanent Drill Seeding (0164-6066) with Straw Mulch Cover (0162-6033)

TYPE B SEEDING - Permanent Cellulose Fiber Mulch Seeding (0164-6057)

CONCRETE RIP RAP - See Civil Engineering Drawings

BASE LANDSCAPE COMMITMENT

TYPE A/B SEEDING
0 TREES
500 SHRUBS / GROUND COVERS

DRAWING LEGEND:

T1
3

PLANT MATERIAL SYMBOL
QUANTITY

STATE OF TEXAS
MICHAEL P. MAUER
1510
REGISTERED LANDSCAPE ARCHITECT
APRIL 6, 2021

FLATIRON/DRAGADOS LLC

M2L Associates Inc.
Houston, Texas 77024
T: 713-722-8897 F: 713-722-8048
Landscape Architecture
Land Planning Urban Design

Texas Department of Transportation ® 2016

US 181 HARBOR BRIDGE

PLANTING PLAN

IH 37
(STA 173+60 -162+60)

SHEET 2 OF 11

DESIGN	FED.RD. DIV.NO.	FEDERAL AID PROJECT NO.		HIGHWAY NO.
GRAPHICS	X	(See Title Sheet)		
	STATE	DISTRICT	COUNTY	SHEET NO.
CHECK	TEXAS	CRP	NUECES	A302
CHECK	CONTROL	SECTION	JOB	
	0101	06	095	34

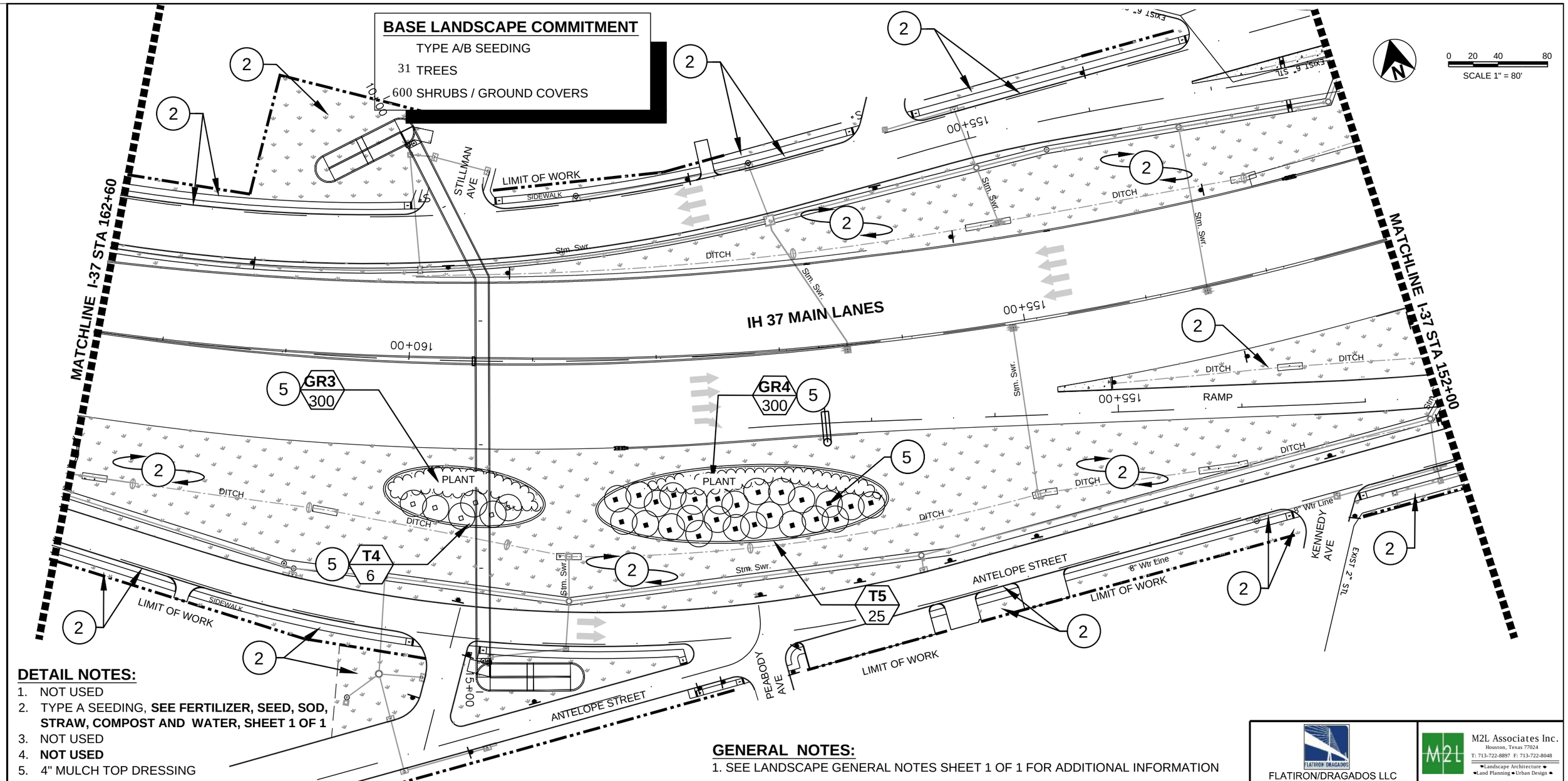

DETAIL NOTES:

1. NOT USED
2. TYPE A SEEDING, **SEE FERTILIZER, SEED, SOD, STRAW, COMPOST AND WATER, SHEET 1 OF 1**
3. NOT USED
4. **NOT USED**
5. 4" MULCH TOP DRESSING
6. TYPE B SEEDING, **SEE FERTILIZER, SEED, SOD, STRAW, COMPOST AND WATER, SHEET 1 OF 1**

DRAWING LEGEND:

TYPE A SEEDING - Permanent Drill Seeding (0164-6066) with Straw Mulch Cover (0162-6033)

TYPE B SEEDING - Permanent Cellulose Fiber Mulch Seeding (0164-6057)

CONCRETE RIP RAP - See Civil Engineering Drawings

DRAWING LEGEND:

T1 / 3

PLANT MATERIAL SYMBOL

QUANTITY

GENERAL NOTES:

1. SEE LANDSCAPE GENERAL NOTES SHEET 1 OF 1 FOR ADDITIONAL INFORMATION

SHEET QUANTITIES - PLANTING

ITEM	DESCRIPTION	UNIT	QNTY.
0161-6012	GENERAL USE COMPOST	CY	713
0168-6001	VEGETATIVE WATERING	MG	988.8
0164-6066	DRILL SEEDING (PERM) (WARM OR COOL)	SY	19715
0164-6057	CELL FBR MLCH SEED(PERM)(SPECIAL MIX)	SY	0
0166-6001	FERTILIZER	AC	11.2
0192-6012	MULCH	CY	500
0162-6003	STRAW OR HAY MULCH	SY	19715
0192-6004	PLANT MATERIAL (3 GALLON) (SHRUB)	EA	600
0192-6026	PLANT MATERIAL (65 GALLON)(TREE)	EA	31
0192-6063	PLANT BED PREP (TYPE I)	SY	770
	NOT USED		0
0192-6065	PLANT BED PREP (TYPE III)	SY	760
0192-6066	PLANT BED PREP (TYPE IV)	SY	19715
1006-6001	LANDSCAPE SOIL AMENDMENT (TYPE I)	EA	31
1006-6002	LANDSCAPE SOIL AMENDMENT (TYPE II)	SY	19715
1006-6003	LANDSCAPE SOIL AMENDMENT (TYPE III)	SY	31
1006-6004	LANDSCAPE SOIL AMENDMENT (TYPE IV)	SY	2280

STATE OF TEXAS
MICHAEL P. MAUER
1510
REGISTERED LANDSCAPE ARCHITECT
APRIL 6, 2021

FLATIRON/DRAGADOS LLC

M2L Associates Inc.
Houston, Texas 77024
T: 713-722-8897 F: 713-722-8048
Landscape Architecture • Land Planning • Urban Design

Texas Department of Transportation ® 2016

US 181 HARBOR BRIDGE

PLANTING PLAN

IH 37
(STA 162+60 -152+00)

SHEET 3 OF 11

DESIGN	FED.RD. DIV.NO.	FEDERAL AID PROJECT NO.		HIGHWAY NO.
GRAPHICS	X	(See Title Sheet)		
	STATE	DISTRICT	COUNTY	SHEET NO.
CHECK	TEXAS	CRP	NUECES	A303
	CONTROL	SECTION	JOB	
CHECK	0101	06	095	35

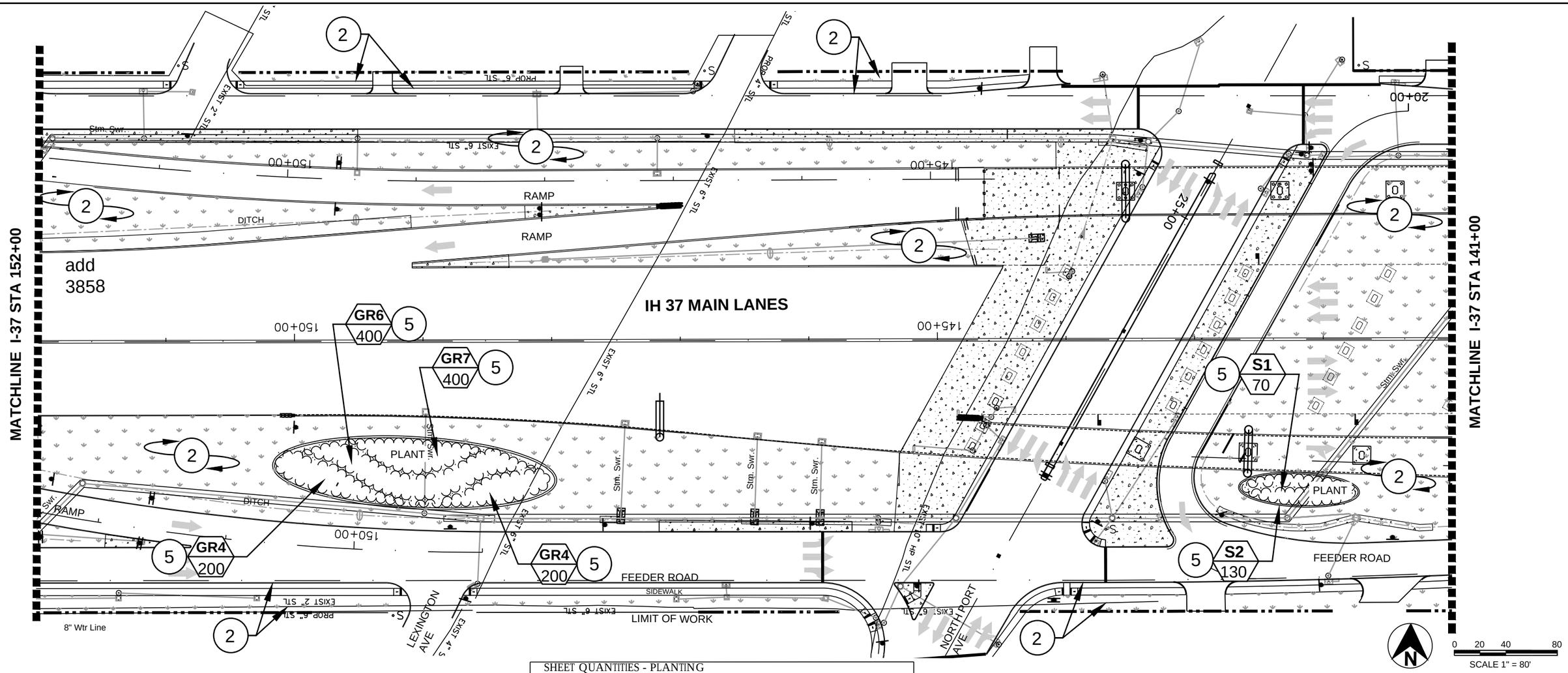

DETAIL NOTES:

1. NOT USED
2. TYPE A SEEDING, **SEE FERTILIZER, SEED, SOD, STRAW, COMPOST AND WATER, SHEET 1 OF 1**
3. NOT USED
4. **NOT USED**
5. 4" MULCH TOP DRESSING
6. TYPE B SEEDING, **SEE FERTILIZER, SEED, SOD, STRAW, COMPOST AND WATER, SHEET 1 OF 1**

GENERAL NOTES:

1. SEE LANDSCAPE GENERAL NOTES SHEET 1 OF 1 FOR ADDITIONAL INFORMATION

SHEET QUANTITIES - PLANTING

ITEM	DESCRIPTION	UNIT	QNTY.
0161-6012	GENERAL USE COMPOST	CY	514
0168-6001	VEGETATIVE WATERING	MG	383.6
0164-6066	DRILL SEEDING (PERM) (WARM OR COOL)	SY	15043
0164-6057	CELL FBR MLCH SEED(PERM)(SPECIAL MIX)	SY	0
0166-6001	FERTILIZER	AC	10.5
0192-6012	MULCH	CY	195
0162-6003	STRAW OR HAY MULCH	SY	15472
0192-6004	PLANT MATERIAL (3 GALLON) (SHRUB)	EA	1400
0192-6026	PLANT MATERIAL (65 GALLON)(TREE)	EA	0
0192-6063	PLANT BED PREP (TYPE I)	SY	0
	NOT USED		0
0192-6065	PLANT BED PREP (TYPE III)	SY	790
0192-6066	PLANT BED PREP (TYPE IV)	SY	15472
1006-6001	LANDSCAPE SOIL AMENDMENT (TYPE I)	EA	0
1006-6002	LANDSCAPE SOIL AMENDMENT (TYPE II)	SY	15472
1006-6003	LANDSCAPE SOIL AMENDMENT (TYPE III)	SY	0
1006-6004	LANDSCAPE SOIL AMENDMENT (TYPE IV)	SY	2370

DRAWING LEGEND:

TYPE A SEEDING - Permanent Drill Seeding (0164-6066) with Straw Mulch Cover (0162-6033)

TYPE B SEEDING - Permanent Cellulose Fiber Mulch Seeding (0164-6057)

CONCRETE RIP RAP - See Civil Engineering Drawings

BASE LANDSCAPE COMMITMENT

TYPE A/B SEEDING

0 TREES

1400 SHRUBS / GROUND COVERS

DRAWING LEGEND:

T1 / 3

PLANT MATERIAL SYMBOL

QUANTITY

STATE OF TEXAS
MICHAEL P. MAUER
1510
REGISTERED LANDSCAPE ARCHITECT
APRIL 6, 2021

FLATIRON/DRAGADOS LLC

M2L Associates Inc.
Houston, Texas 77024
T: 713-722-8897 F: 713-722-8048
Landscape Architecture
Land Planning • Urban Design

Texas Department of Transportation ® 2016

US 181 HARBOR BRIDGE

PLANTING PLAN

IH 37
(STA 152+00 -141+00)

SHEET 4 OF 11

DESIGN	FED.RD. DIV.NO.	FEDERAL AID PROJECT NO.		HIGHWAY NO.
GRAPHICS	X	(See Title Sheet)		
	STATE	DISTRICT	COUNTY	SHEET NO.
CHECK	TEXAS	CRP	NUECES	A304
CHECK	CONTROL	SECTION	JOB	
	0101	06	095	36

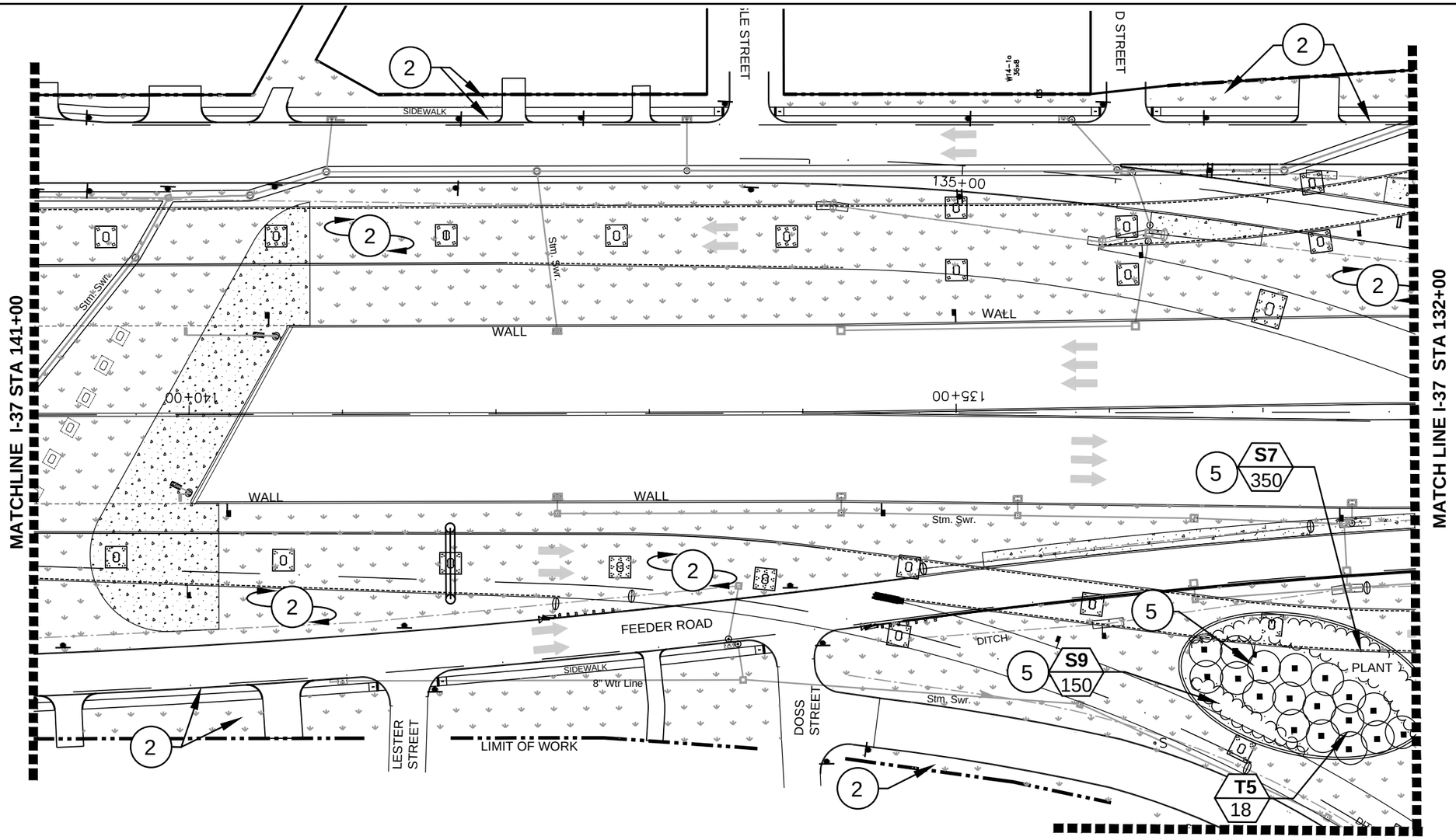

DRAWING LEGEND:

TYPE A SEEDING - Permanent Drill Seeding (0164-6066) with Straw Mulch Cover (0162-6033)

TYPE B SEEDING - Permanent Cellulose Fiber Mulch Seeding (0164-6057)

CONCRETE RIP RAP - See Civil Engineering Drawings

BASE LANDSCAPE COMMITMENT

TYPE A/B SEEDING

18 TREES

500 SHRUBS / GROUND COVERS

N

0 20 40 80

SCALE 1" = 80'

DETAIL NOTES:

1. NOT USED
2. TYPE A SEEDING, **SEE FERTILIZER, SEED, SOD, STRAW, COMPOST AND WATER, SHEET 1 OF 1**
3. NOT USED
4. **NOT USED**
5. 4" MULCH TOP DRESSING
6. TYPE B SEEDING, **SEE FERTILIZER, SEED, SOD, STRAW, COMPOST AND WATER, SHEET 1 OF 1**

GENERAL NOTES:

1. SEE LANDSCAPE GENERAL NOTES SHEET 1 OF 1 FOR ADDITIONAL INFORMATION

DRAWING LEGEND:

T1 / 3

PLANT MATERIAL SYMBOL

QUANTITY

SHEET QUANTITIES - PLANTING

ITEM	DESCRIPTION	UNIT	QNTY.
0161-6012	GENERAL USE COMPOST	CY	672
0168-6001	VEGETATIVE WATERING	MG	451.7
0164-6066	DRILL SEEDING (PERM) (WARM OR COOL)	SY	18220
0164-6057	CELL FBR MLCH SEED(PERM)(SPECIAL MIX)	SY	0
0166-6001	FERTILIZER	AC	12.5
0192-6012	MULCH	CY	346
0162-6003	STRAW OR HAY MULCH	SY	18220
0192-6004	PLANT MATERIAL (3 GALLON) (SHRUB)	EA	500
0192-6026	PLANT MATERIAL (65 GALLON)(TREE)	EA	18
0192-6063	PLANT BED PREP (TYPE I)	SY	925
	NOT USED		0
0192-6065	PLANT BED PREP (TYPE III)	SY	460
0192-6066	PLANT BED PREP (TYPE IV)	SY	18220
1006-6001	LANDSCAPE SOIL AMENDMENT (TYPE I)	EA	18
1006-6002	LANDSCAPE SOIL AMENDMENT (TYPE II)	SY	18220
1006-6003	LANDSCAPE SOIL AMENDMENT (TYPE III)	SY	18
1006-6004	LANDSCAPE SOIL AMENDMENT (TYPE IV)	SY	1380

STATE OF TEXAS
MICHAEL P. MAUER
1510
REGISTERED LANDSCAPE ARCHITECT
APRIL 6, 2021

FLATIRON/DRAGADOS LLC

M2L Associates Inc.
Houston, Texas 77024
T: 713-722-8897 F: 713-722-8048
Landscape Architecture • Land Planning • Urban Design

Texas Department of Transportation ® 2016

US 181 HARBOR BRIDGE

PLANTING PLAN

IH 37
(STA 141+00 -132+00)

SHEET 5 OF 11

DESIGN	FED.RD. DIV.NO.	FEDERAL AID PROJECT NO.		HIGHWAY NO.
GRAPHICS	X	(See Title Sheet)		
	STATE	DISTRICT	COUNTY	SHEET NO.
CHECK	TEXAS	CRP	NUECES	A305
CHECK	CONTROL	SECTION	JOB	
	0101	06	095	37

MATCH LINE US181 STA 1159+00 (SEE US181 1159+00 - 1155+00

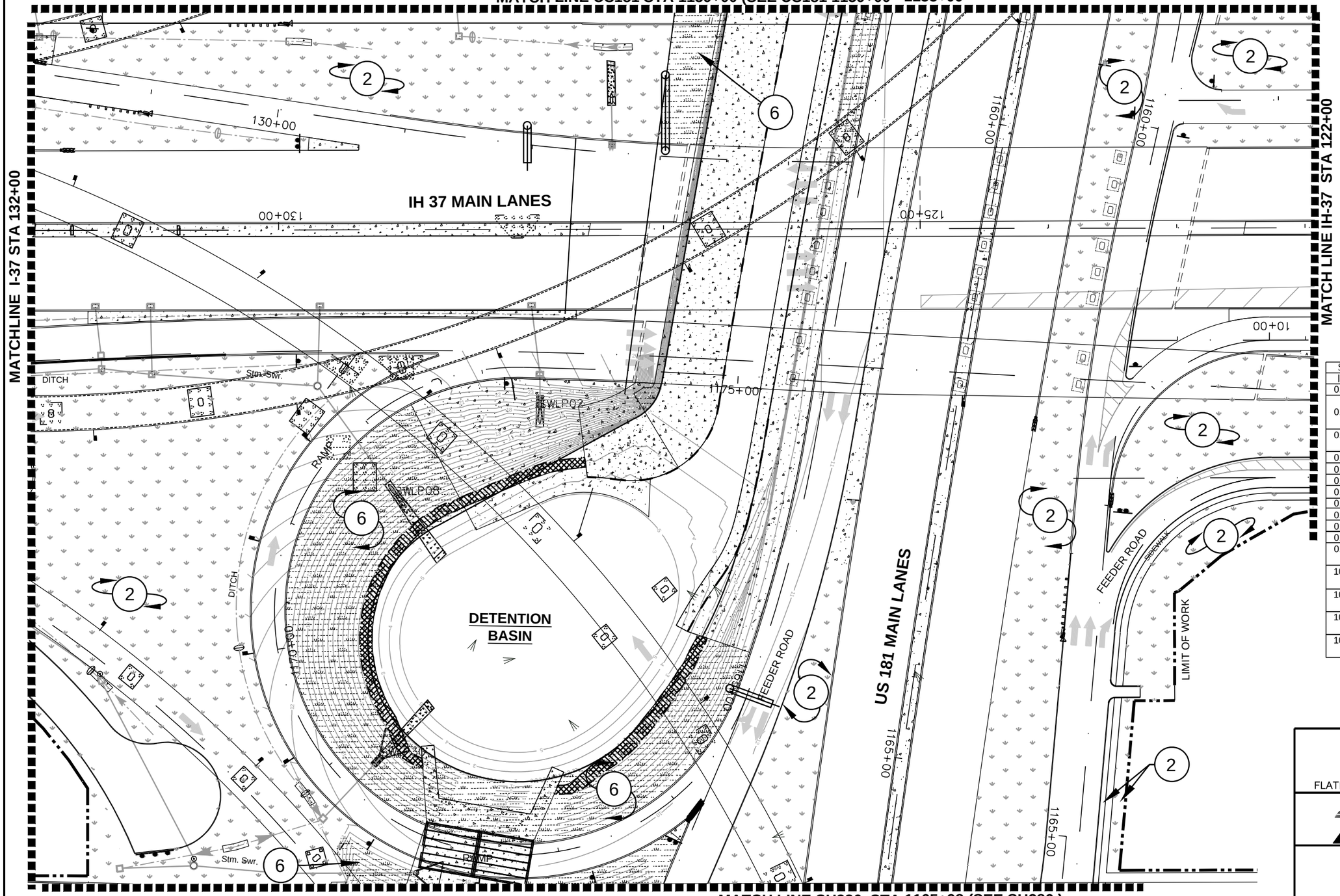

MATCH LINE SH286 STA 1165+98 (SEE SH286)

DRAWING LEGEND:

TYPE A SEEDING - Permanent Drill Seeding (0164-6066) with Straw Mulch Cover (0162-6033)

TYPE B SEEDING - Permanent Cellulose Fiber Mulch Seeding (0164-6057)

CONCRETE RIP RAP - See Civil Engineering Drawings

T1 — PLANT MATERIAL SYMBOL

3 — QUANTITY

SHEET QUANTITIES - PLANTING

ITEM	DESCRIPTION	UNIT	QNTY.
0161-6012	GENERAL USE COMPOST	CY	866
0164-6066	DRILL SEEDING (PERM) (WARM OR COOL)	SY	21214
0164-6057	CELL FBR MLCH SEED(PERM) (SPECIAL MIX)	SY	6833
0166-6001	FERTILIZER	AC	16.5
0192-6012	MULCH	CY	335
0162-6003	STRAW OR HAY MULCH	SY	21214
0192-6004	PLANT MATERIAL (3 GALLON)	EA	0
0192-6026	PLANT MATERIAL (65 GALLON)	EA	0
0192-6063	PLANT BED PREP (TYPE I)	SY	0
0192-6065	PLANT BED PREP (TYPE III)	SY	0
0168-6001	VEGETATIVE WATERING	MG	669.7
0192-6066	PLANT BED PREP (TYPE IV)	SY	28047
1006-6001	LANDSCAPE SOIL AMENDMENT (TYPE I)	EA	0
1006-6002	LANDSCAPE SOIL AMENDMENT (TYPE II)	SY	28047
1006-6003	LANDSCAPE SOIL AMENDMENT (TYPE III)	SY	0
1006-6004	LANDSCAPE SOIL AMENDMENT (TYPE IV)	SY	0

GENERAL NOTES:

1. SEE LANDSCAPE GENERAL NOTES SHEET 1 OF 1 FOR ADDITIONAL INFORMATION

BASE LANDSCAPE COMMITMENT

TYPE A/B SEEDING

0 TREES

0 SHRUBS / GROUND COVERS

DETAIL NOTES:

1. NOT USED
2. TYPE A SEEDING, **SEE FERTILIZER, SEED, SOD, STRAW, COMPOST AND WATER, SHEET 1 OF 1**
3. NOT USED
4. **NOT USED**
5. 4" MULCH TOP DRESSING
6. TYPE B SEEDING, **SEE FERTILIZER, SEED, SOD, STRAW, COMPOST AND WATER, SHEET 1 OF 1**

STATE OF TEXAS
MICHAEL P. MAUER
1510
REGISTERED LANDSCAPE ARCHITECT
APRIL 6, 2021

FLATIRON/DRAGADOS LLC

M2L Associates Inc.
Houston, Texas 77024
T: 713-722-8897 F: 713-722-8048
Landscape Architecture
Land Planning Urban Design

Texas Department of Transportation ® 2016

US 181 HARBOR BRIDGE

PLANTING PLAN

IH 37
(STA 132+00 -122+00)

SHEET 6 OF 11

DESIGN	FED.RD. DIV.NO.	FEDERAL AID PROJECT NO.		HIGHWAY NO.
GRAPHICS	X	(See Title Sheet)		
	STATE	DISTRICT	COUNTY	SHEET NO.
CHECK	TEXAS	CRP	NUECES	A306
CHECK	CONTROL	SECTION	JOB	
	0101	06	095	38

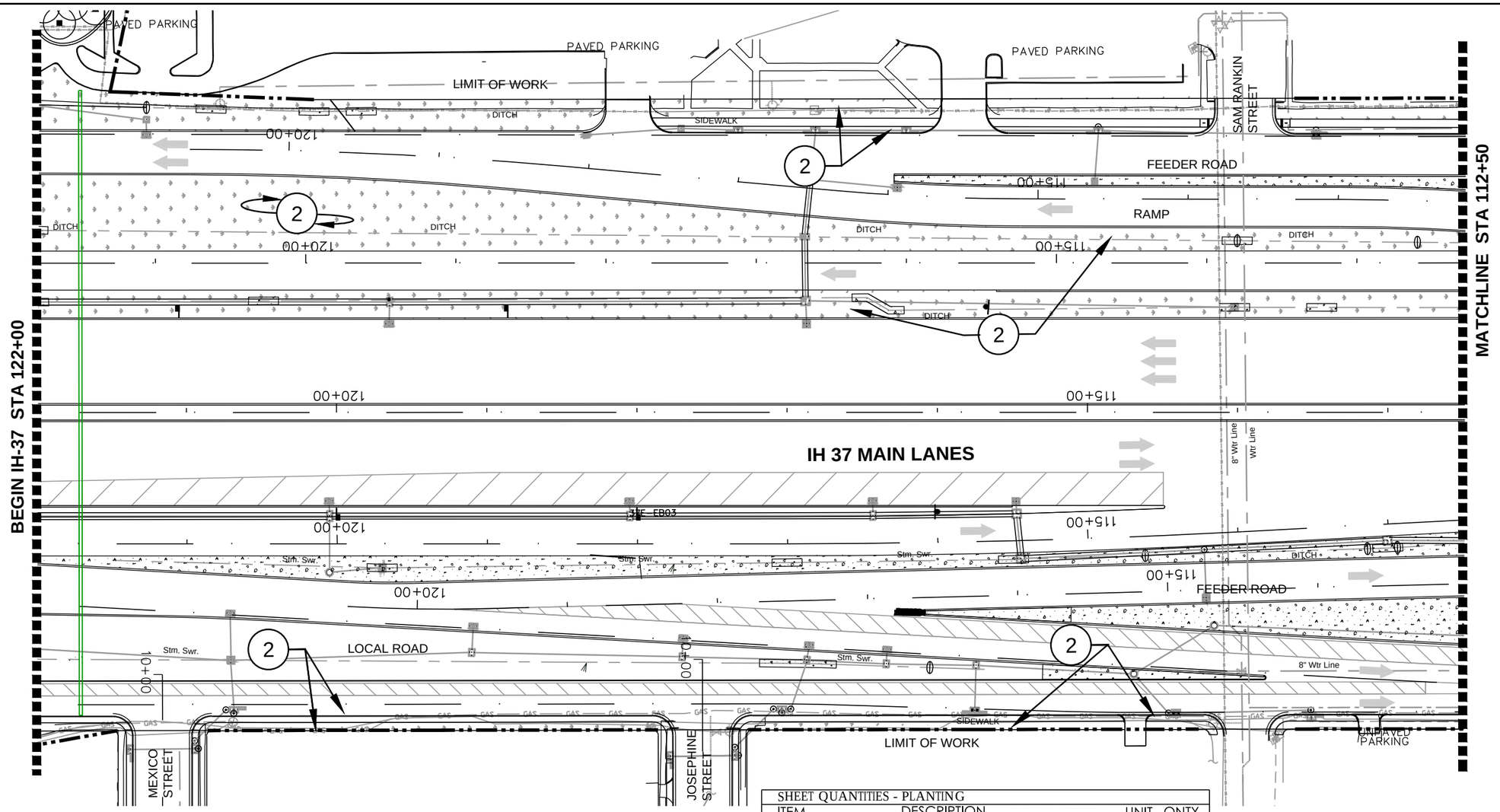

BASE LANDSCAPE COMMITMENT

TYPE A/B SEEDING
0 TREES
0 SHRUBS / GROUND COVERS

DRAWING LEGEND:

T1 — PLANT MATERIAL SYMBOL
3 — QUANTITY

N

0 20 40 80
SCALE 1" = 80'

DETAIL NOTES:

1. NOT USED
2. TYPE A SEEDING, **SEE FERTILIZER, SEED, SOD, STRAW, COMPOST AND WATER. SHEET 1 OF 1**
3. **NOT USED**
4. **NOT USED**
5. 4" MULCH TOP DRESSING
6. TYPE B SEEDING, **SEE FERTILIZER, SEED, SOD, STRAW, COMPOST AND WATER, SHEET 1 OF 1**

DRAWING LEGEND:

TYPE A SEEDING - Permanent Drill Seeding(0164-6066) with Straw Mulch Cover (0162-6033)

TYPE B SEEDING - Permanent Cellulose Fiber Mulch Seeding (0164-6057)

CONCRETE RIPRAP - See Civil Engineering Drawings

SHEET QUANTITIES - PLANTING

ITEM	DESCRIPTION	UNIT	QNTY.
0161-6012	GENERAL USE COMPOST	CY	125
0168-6001	VEGETATIVE WATERING	MG	224.1
0164-6066	DRILL SEEDING (PERM) (WARM OR COOL)	SY	4520
0164-6057	CELL FBR MLCH SEED(PERM)(SPECIAL MIX)	SY	0
0166-6001	FERTILIZER	AC	2.8
0192-6012	MULCH	CY	0
0162-6003	STRAW OR HAY MULCH	SY	4520
0192-6004	PLANT MATERIAL (3 GALLON) (SHRUB)	EA	0
0192-6026	PLANT MATERIAL (65 GALLON)(TREE)	EA	0
0192-6063	PLANT BED PREP (TYPE I)	SY	0
	NOT USED	-	-
0192-6065	PLANT BED PREP (TYPE III)	SY	0
0192-6066	PLANT BED PREP (TYPE IV)	SY	4520
1006-6001	LANDSCAPE SOIL AMENDMENT (TYPE I)	EA	0
1006-6002	LANDSCAPE SOIL AMENDMENT (TYPE II)	SY	4520
1006-6003	LANDSCAPE SOIL AMENDMENT (TYPE III)	SY	0
1006-6004	LANDSCAPE SOIL AMENDMENT (TYPE IV)	SY	0

GENERAL NOTES:

1. SEE LANDSCAPE GENERAL NOTES SHEET 1 OF 1 FOR ADDITIONAL INFORMATION

STATE OF TEXAS
MICHAEL P. MAUER
1510
REGISTERED LANDSCAPE ARCHITECT
April 6, 2021

FLATIRON/DRAGADOS LLC

M2L Associates Inc.
Houston, Texas 77024
T: 713-722-8897 F: 713-722-8048
Landscape Architecture • Land Planning • Urban Design

Texas Department of Transportation 2016

US 181 HARBOR BRIDGE

PLANTING PLAN

IH 37
(STA 122+00 -112+50)

SHEET 7 OF 11

DESIGN	FED.RD. DIV.NO.	FEDERAL AID PROJECT NO.		HIGHWAY NO.
GRAPHICS	X	(See Title Sheet)		
	STATE	DISTRICT	COUNTY	SHEET NO.
CHECK	TEXAS	CRP	NUECES	A307
CHECK	CONTROL	SECTION	JOB	
	0101	06	095	39

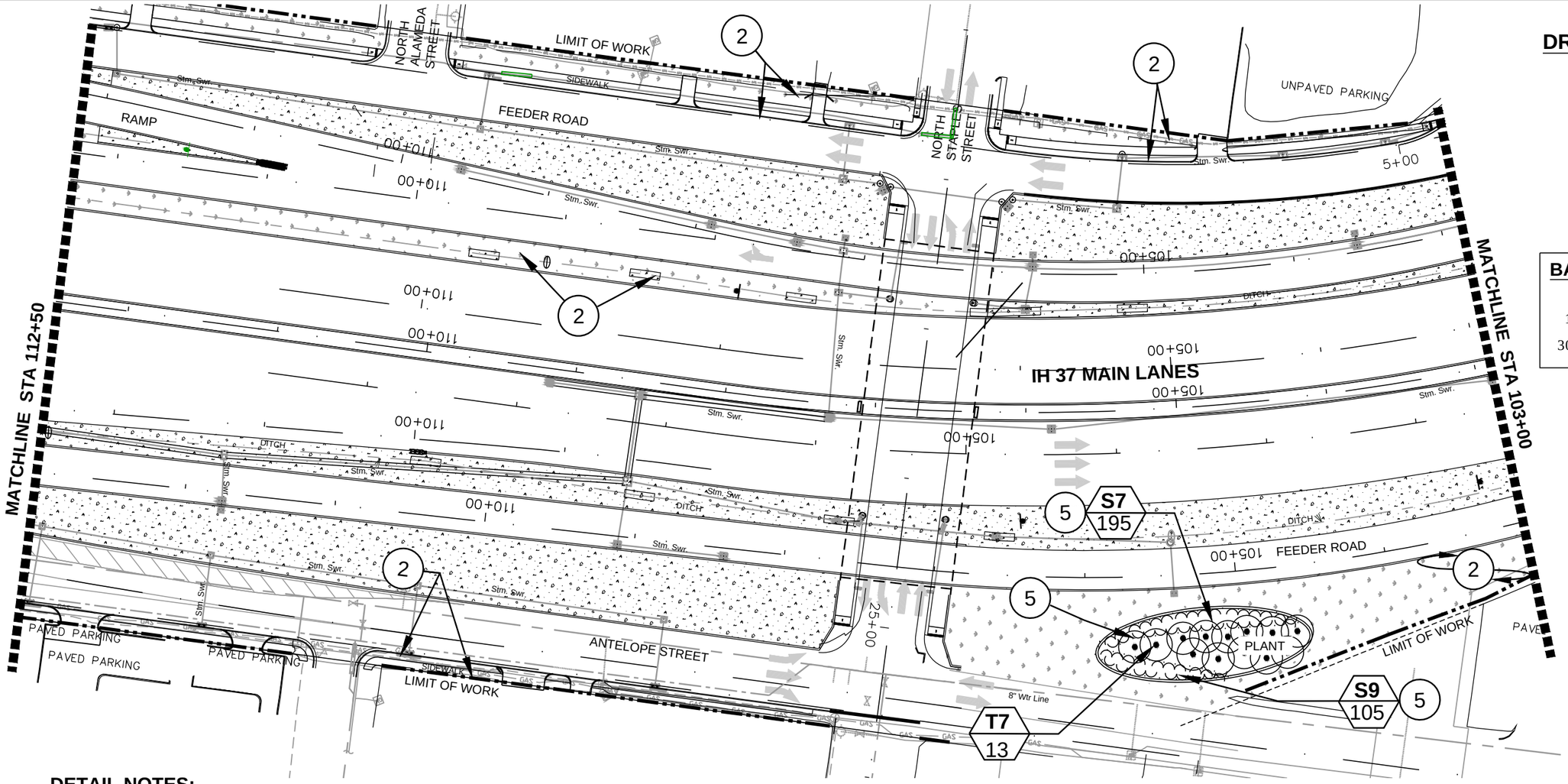

DRAWING LEGEND:

T1 — PLANT MATERIAL SYMBOL

3 — QUANTITY

BASE LANDSCAPE COMMITMENT

TYPE A/B SEEDING

13 TREES

300 SHRUBS / GROUND COVERS

N

0 20 40 80

SCALE 1" = 80'

DETAIL NOTES:

1. NOT USED
2. TYPE A SEEDING, **SEE FERTILIZER, SEED, SOD, STRAW, COMPOST AND WATER. SHEET 1 OF 1**
3. **NOT USED**
4. **NOT USED**
5. 4" MULCH TOP DRESSING
6. TYPE B SEEDING, **SEE FERTILIZER, SEED, SOD, STRAW, COMPOST AND WATER, SHEET 1 OF 1**

DRAWING LEGEND:

TYPE A SEEDING - Permanent Drill Seeding(0164-6066) with Straw Mulch Cover (0162-6033)

TYPE B SEEDING - Permanent Cellulose Fiber Mulch Seeding (0164-6057)

CONCRETE RIPRAP - See Civil Engineering Drawings

SHEET QUANTITIES - PLANTING

ITEM	DESCRIPTION	UNIT	QNTY.
0161-6012	GENERAL USE COMPOST	CY	418
0168-6001	VEGETATIVE WATERING	MG	321.8
0164-6066	DRILL SEEDING (PERM) (WARM OR COOL)	SY	12980
0164-6057	CELL FBR MLCH SEED(PERM)(SPECIAL MIX)	SY	0
0166-6001	FERTILIZER	AC	7.9
0192-6012	MULCH	CY	146
0162-6003	STRAW OR HAY MULCH	SY	12980
0192-6004	PLANT MATERIAL (3 GALLON) (SHRUB)	EA	300
0192-6026	PLANT MATERIAL (65 GALLON)(TREE)	EA	13
0192-6063	PLANT BED PREP (TYPE I)	SY	420
	NOT USED	-	-
0192-6065	PLANT BED PREP (TYPE III)	SY	165
0192-6066	PLANT BED PREP (TYPE IV)	SY	12980
1006-6001	LANDSCAPE SOIL AMENDMENT (TYPE I)	EA	13
1006-6002	LANDSCAPE SOIL AMENDMENT (TYPE II)	SY	12980
1006-6003	LANDSCAPE SOIL AMENDMENT (TYPE III)	SY	13
1006-6004	LANDSCAPE SOIL AMENDMENT (TYPE IV)	SY	495

GENERAL NOTES:

1. SEE LANDSCAPE GENERAL NOTES SHEET 1 OF 1 FOR ADDITIONAL INFORMATION

STATE OF TEXAS
MICHAEL P. MAUER
1510
REGISTERED LANDSCAPE ARCHITECT
April 6, 2021

FLATIRON/DRAGADOS LLC

M2L Associates Inc.
Houston, Texas 77024
T: 713-722-8897 F: 713-722-8048
Landscape Architecture • Land Planning • Urban Design

Texas Department of Transportation ® 2016

US 181 HARBOR BRIDGE

PLANTING PLAN

IH 37
(STA 112+50 -103+00)

SHEET 8 OF 11

DESIGN	FED.RD. DIV.NO.	FEDERAL AID PROJECT NO.		HIGHWAY NO.
GRAPHICS	X	(See Title Sheet)		
	STATE	DISTRICT	COUNTY	SHEET NO.
CHECK	TEXAS	CRP	NUECES	A308
	CONTROL	SECTION	JOB	
CHECK	0101	06	095	40

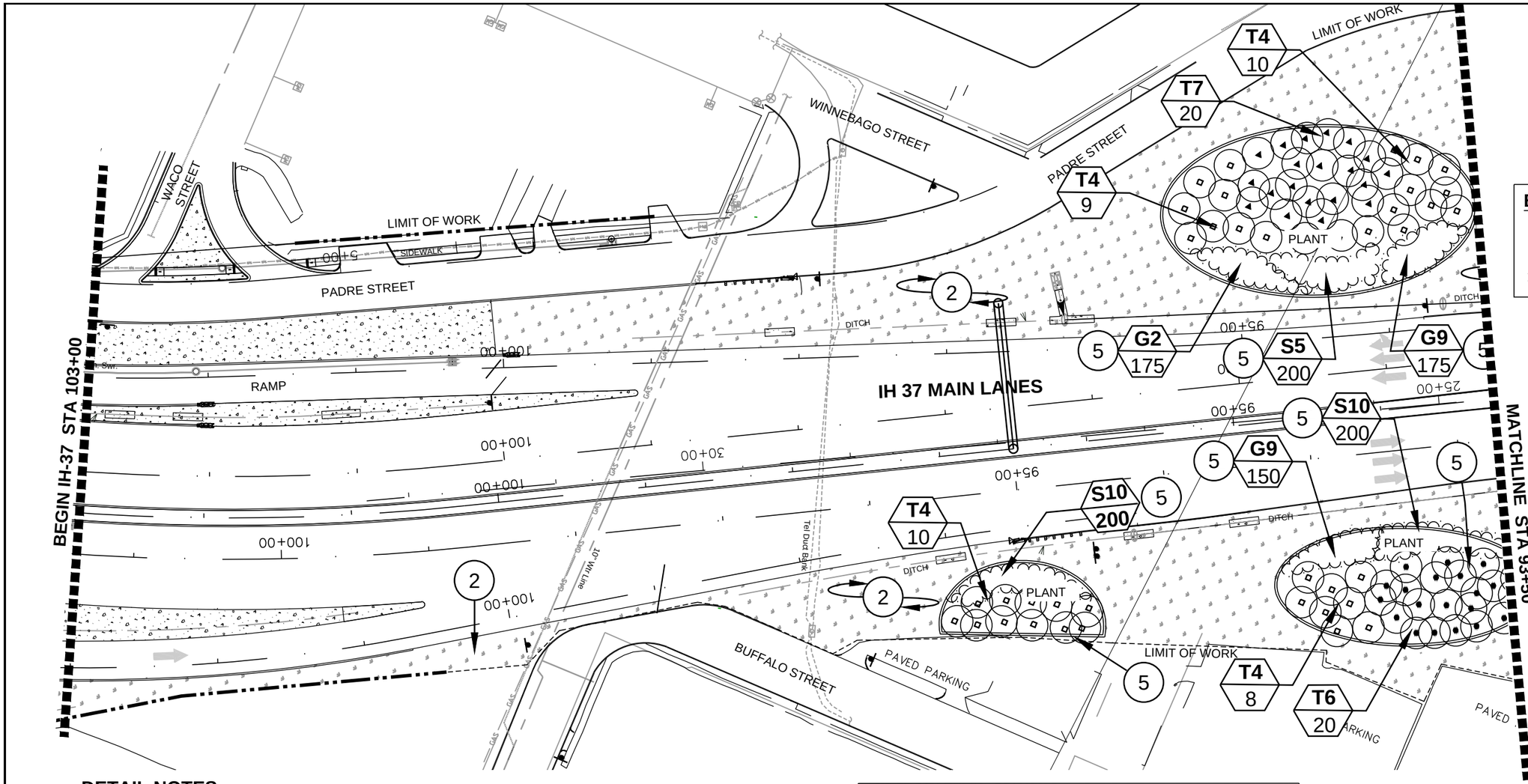

BASE LANDSCAPE COMMITMENT

TYPE A/B SEEDING
77 TREES
1100 SHRUBS / GROUND COVERS

DRAWING LEGEND:

T1 / 3 — PLANT MATERIAL SYMBOL / QUANTITY

0 20 40 80
SCALE 1" = 80'

DETAIL NOTES:

1. NOT USED
2. TYPE A SEEDING, **SEE FERTILIZER, SEED, SOD, STRAW, COMPOST AND WATER. SHEET 1 OF 1**
3. **NOT USED**
4. **NOT USED**
5. 4" MULCH TOP DRESSING
6. TYPE B SEEDING, **SEE FERTILIZER, SEED, SOD, STRAW, COMPOST AND WATER, SHEET 1 OF 1**

DRAWING LEGEND:

TYPE A SEEDING - Permanent Drill Seeding(0164-6066) with Straw Mulch Cover (0162-6033)

TYPE B SEEDING - Permanent Cellulose Fiber Mulch Seeding (0164-6057)

CONCRETE RIPRAP - See Civil Engineering Drawings

SHEET QUANTITIES - PLANTING

ITEM	DESCRIPTION	UNIT	QNTY.
0161-6012	GENERAL USE COMPOST	CY	854
0168-6001	VEGETATIVE WATERING	MG	660.0
0164-6066	DRILL SEEDING (PERM) (WARM OR COOL)	SY	15685
0164-6057	CELL FBR MLCH SEED(PERM)(SPECIAL MIX)	SY	0
0166-6001	FERTILIZER	AC	8.0
0192-6012	MULCH	CY	925
0162-6003	STRAW OR HAY MULCH	SY	15685
0192-6004	PLANT MATERIAL (3 GALLON) (SHRUB)	EA	1100
0192-6026	PLANT MATERIAL (65 GALLON)(TREE)	EA	77
0192-6063	PLANT BED PREP (TYPE I)	SY	2678
	NOT USED	-	-
0192-6065	PLANT BED PREP (TYPE III)	SY	1020
0192-6066	PLANT BED PREP (TYPE IV)	SY	15685
1006-6001	LANDSCAPE SOIL AMENDMENT (TYPE I)	EA	77
1006-6002	LANDSCAPE SOIL AMENDMENT (TYPE II)	SY	15685
1006-6003	LANDSCAPE SOIL AMENDMENT (TYPE III)	SY	77
1006-6004	LANDSCAPE SOIL AMENDMENT (TYPE IV)	SY	3005

GENERAL NOTES:

1. SEE LANDSCAPE GENERAL NOTES SHEET 1 OF 1 FOR ADDITIONAL INFORMATION

STATE OF TEXAS
MICHAEL P. MAUER
1510
REGISTERED LANDSCAPE ARCHITECT
April 6, 2021

FLATIRON/DRAGADOS LLC

M2L Associates Inc.
Houston, Texas 77024
T: 713-722-8897 F: 713-722-8048
Landscape Architecture
Land Planning Urban Design

Texas Department of Transportation ® 2016

US 181 HARBOR BRIDGE

PLANTING PLAN

IH 37
(STA 103+00 - 93+50)

SHEET 9 OF 11

DESIGN	FED.RD. DIV.NO.	FEDERAL AID PROJECT NO.		HIGHWAY NO.
GRAPHICS	X	(See Title Sheet)		
	STATE	DISTRICT	COUNTY	SHEET NO.
CHECK	TEXAS	CRP	NUECES	A309
CHECK	CONTROL	SECTION	JOB	
	0101	06	095	41

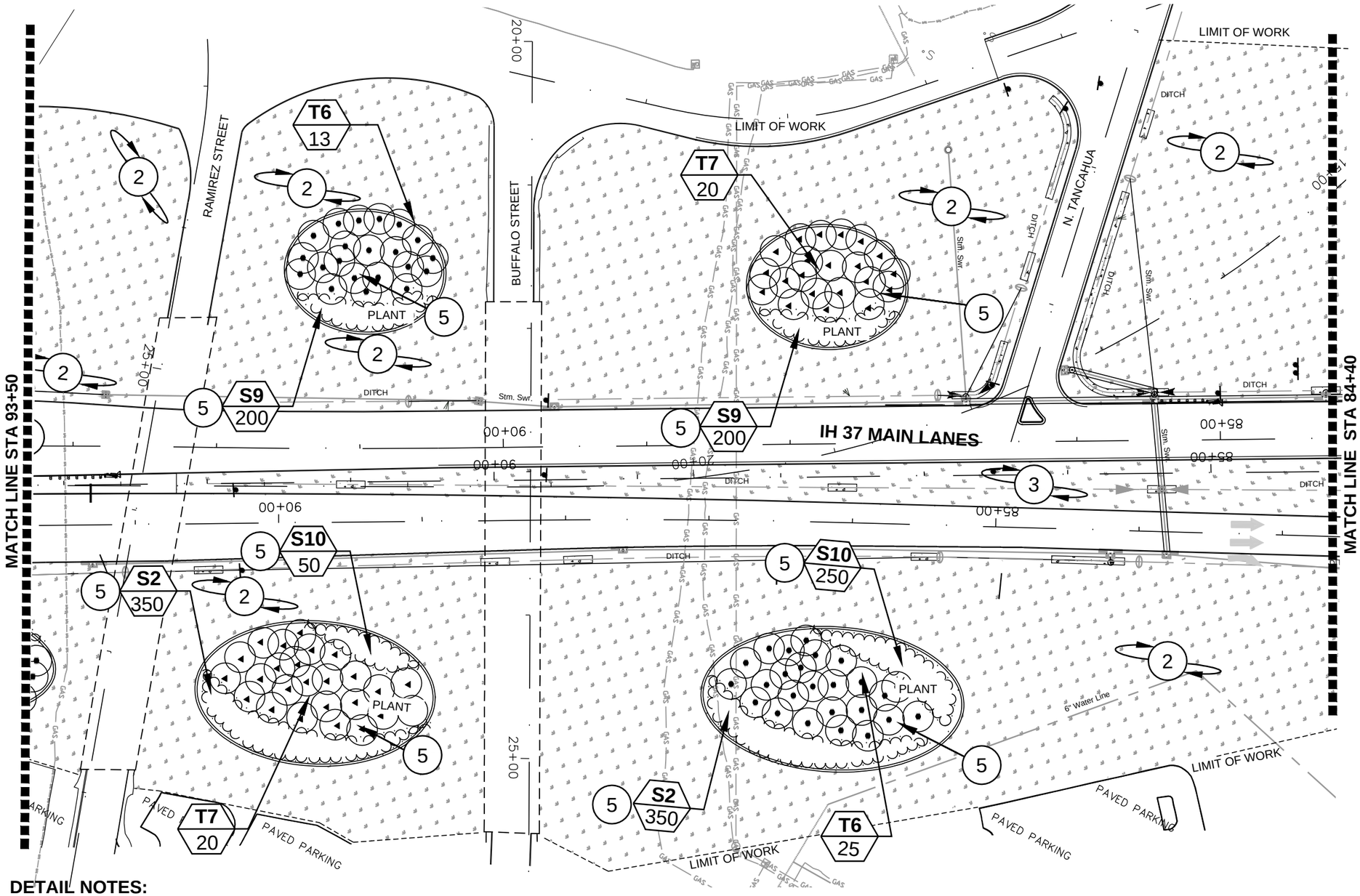

DRAWING LEGEND:

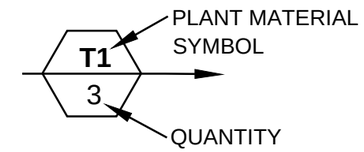

BASE LANDSCAPE COMMITMENT

TYPE A/B SEEDING
78 TREES
1400 SHRUBS / GROUND COVERS

DRAWING LEGEND:

TYPE A SEEDING - Permanent Drill Seeding (0164-6066) with Straw Mulch Cover (0162-6033)

TYPE B SEEDING - Permanent Cellulose Fiber Mulch Seeding (0164-6057)

CONCRETE RIPRAP - See Civil Engineering Drawings

0 20 40 80
SCALE 1" = 80'

DETAIL NOTES:

1. NOT USED
2. TYPE A SEEDING, **SEE FERTILIZER, SEED, SOD, STRAW, COMPOST AND WATER. SHEET 1 OF 1**
3. **NOT USED**
4. **NOT USED**
5. 4" MULCH TOP DRESSING
6. TYPE B SEEDING, **SEE FERTILIZER, SEED, SOD, STRAW, COMPOST AND WATER, SHEET 1 OF 1**

GENERAL NOTES:

1. SEE LANDSCAPE GENERAL NOTES SHEET 1 OF 1 FOR ADDITIONAL INFORMATION

SHEET QUANTITIES - PLANTING

ITEM	DESCRIPTION	UNIT	QNTY.
0161-6012	GENERAL USE COMPOST	CY	1343
0168-6001	VEGETATIVE WATERING	MG	1625.1
0164-6066	DRILL SEEDING (PERM) (WARM OR COOL)	SY	32779
0164-6057	CELL FBR MLCH SEED(PERM)(SPECIAL MIX)	SY	0
0166-6001	FERTILIZER	AC	18.9
0192-6012	MULCH	CY	1091
0162-6003	STRAW OR HAY MULCH	SY	32779
0192-6004	PLANT MATERIAL (3 GALLON) (SHRUB)	EA	1400
0192-6026	PLANT MATERIAL (65 GALLON)(TREE)	EA	78
0192-6063	PLANT BED PREP (TYPE I)	SY	2875
	NOT USED	-	-
0192-6065	PLANT BED PREP (TYPE III)	SY	1490
0192-6066	PLANT BED PREP (TYPE IV)	SY	32779
1006-6001	LANDSCAPE SOIL AMENDMENT (TYPE I)	EA	78
1006-6002	LANDSCAPE SOIL AMENDMENT (TYPE II)	SY	32779
1006-6003	LANDSCAPE SOIL AMENDMENT (TYPE III)	SY	78
1006-6004	LANDSCAPE SOIL AMENDMENT (TYPE IV)	SY	4470

STATE OF TEXAS
MICHAEL P. MAUER
1510
REGISTERED LANDSCAPE ARCHITECT
April 6, 2021

FLATIRON/DRAGADOS LLC

M2L Associates Inc.
Houston, Texas 77024
T: 713-722-8897 F: 713-722-8048
Landscape Architecture
Land Planning • Urban Design

Texas Department of Transportation ® 2016

US 181 HARBOR BRIDGE

PLANTING PLAN

IH 37
(STA 93+50 - 84+40)

SHEET 10 OF 11

DESIGN	FED.RD. DIV.NO.	FEDERAL AID PROJECT NO.		HIGHWAY NO.
GRAPHICS	X	(See Title Sheet)		
	STATE	DISTRICT	COUNTY	SHEET NO.
CHECK	TEXAS	CRP	NUECES	A310
CHECK	CONTROL	SECTION	JOB	
	0101	06	095	42

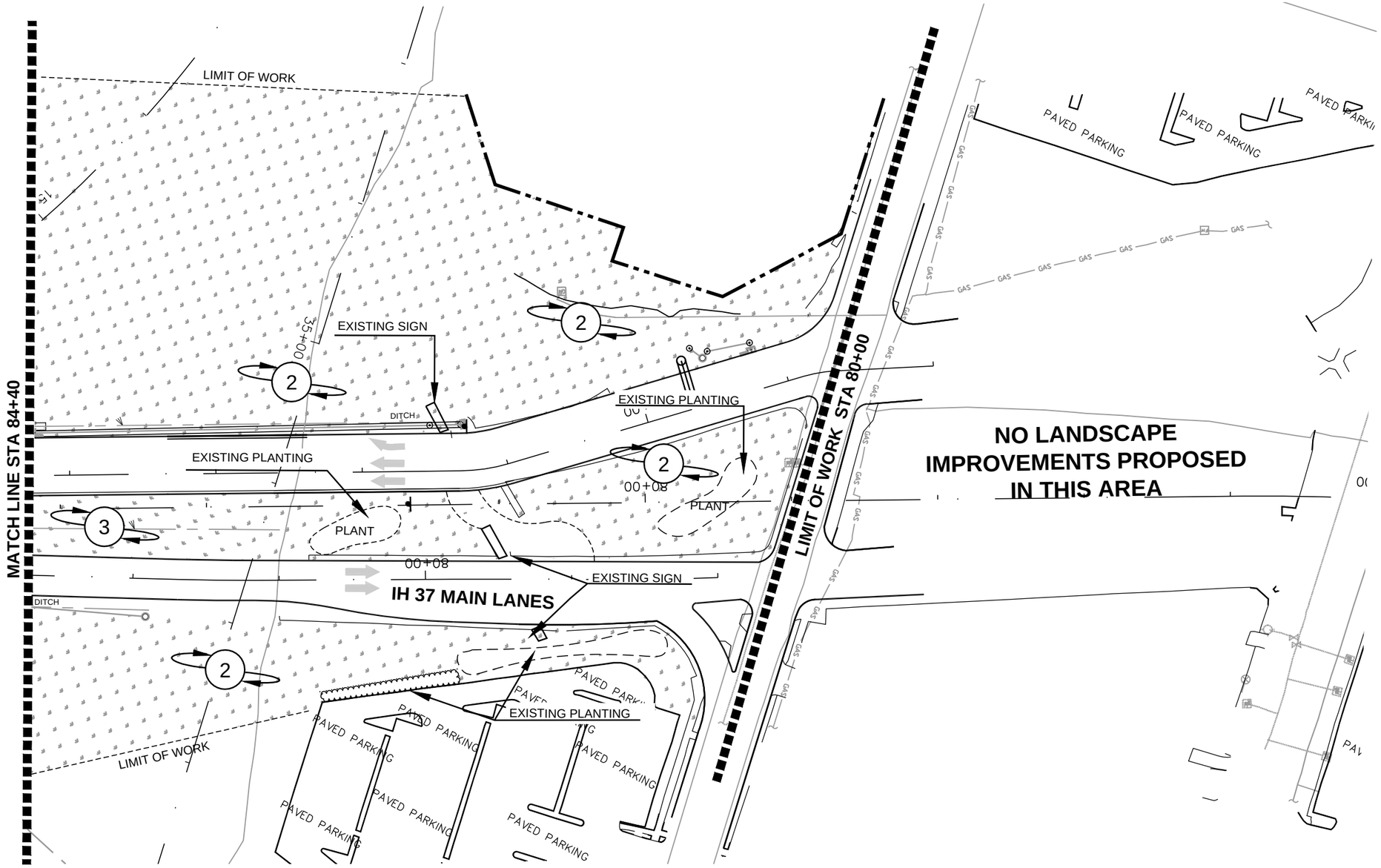

DRAWING LEGEND:

T1 — PLANT MATERIAL SYMBOL

3 — QUANTITY

BASE LANDSCAPE COMMITMENT

TYPE A/B SEEDING

0 TREES

0 SHRUBS / GROUND COVERS

DRAWING LEGEND:

TYPE A SEEDING - Permanent Drill Seeding (0164-6066) with Straw Mulch Cover (0162-6033)

TYPE B SEEDING - Permanent Cellulose Fiber Mulch Seeding (0164-6057)

CONCRETE RIPRAP - See Civil Engineering Drawings

0 20 40 80

SCALE 1" = 80'

DETAIL NOTES:

1. NOT USED
2. TYPE A SEEDING, **SEE FERTILIZER, SEED, SOD, STRAW, COMPOST AND WATER. SHEET 1 OF 1**
3. **NOT USED**
4. **NOT USED**
5. 4" MULCH TOP DRESSING
6. TYPE B SEEDING, **SEE FERTILIZER, SEED, SOD, STRAW, COMPOST AND WATER, SHEET 1 OF 1**

GENERAL NOTES:

1. SEE LANDSCAPE GENERAL NOTES SHEET 1 OF 1 FOR ADDITIONAL INFORMATION

SHEET QUANTITIES - PLANTING

ITEM	DESCRIPTION	UNIT	QNTY.
0161-6012	GENERAL USE COMPOST	CY	453
0168-6001	VEGETATIVE WATERING	MG	406.4
0164-6066	DRILL SEEDING (PERM) (WARM OR COOL)	SY	16390
0164-6057	CELL FBR MLCH SEED(PERM)(SPECIAL MIX)	SY	0
0166-6001	FERTILIZER	AC	9.8
0192-6012	MULCH	CY	0
0162-6003	STRAW OR HAY MULCH	SY	16390
0192-6004	PLANT MATERIAL (3 GALLON) (SHRUB)	EA	0
0192-6026	PLANT MATERIAL (65 GALLON)(TREE)	EA	0
0192-6063	PLANT BED PREP (TYPE I)	SY	0
	NOT USED	-	-
0192-6065	PLANT BED PREP (TYPE III)	SY	0
0192-6066	PLANT BED PREP (TYPE IV)	SY	16390
1006-6001	LANDSCAPE SOIL AMENDMENT (TYPE I)	EA	0
1006-6002	LANDSCAPE SOIL AMENDMENT (TYPE II)	SY	16390
1006-6003	LANDSCAPE SOIL AMENDMENT (TYPE III)	SY	0
1006-6004	LANDSCAPE SOIL AMENDMENT (TYPE IV)	SY	0

STATE OF TEXAS
MICHAEL P. MAUER
1510
REGISTERED LANDSCAPE ARCHITECT
April 6, 2021

FLATIRON/DRAGADOS LLC

M2L Associates Inc.
Houston, Texas 77024
T: 713-722-8897 F: 713-722-8048
Landscape Architecture • Land Planning • Urban Design

Texas Department of Transportation ® 2016

US 181 HARBOR BRIDGE

PLANTING PLAN

IH 37
(STA 84+40 - 80+00)

SHEET 11 OF 11

DESIGN	FED.RD. DIV.NO.	FEDERAL AID PROJECT NO.		HIGHWAY NO.
GRAPHICS	X	(See Title Sheet)		
	STATE	DISTRICT	COUNTY	SHEET NO.
CHECK	TEXAS	CRP	NUECES	A311
	CONTROL	SECTION	JOB	
CHECK	0101	06	095	43

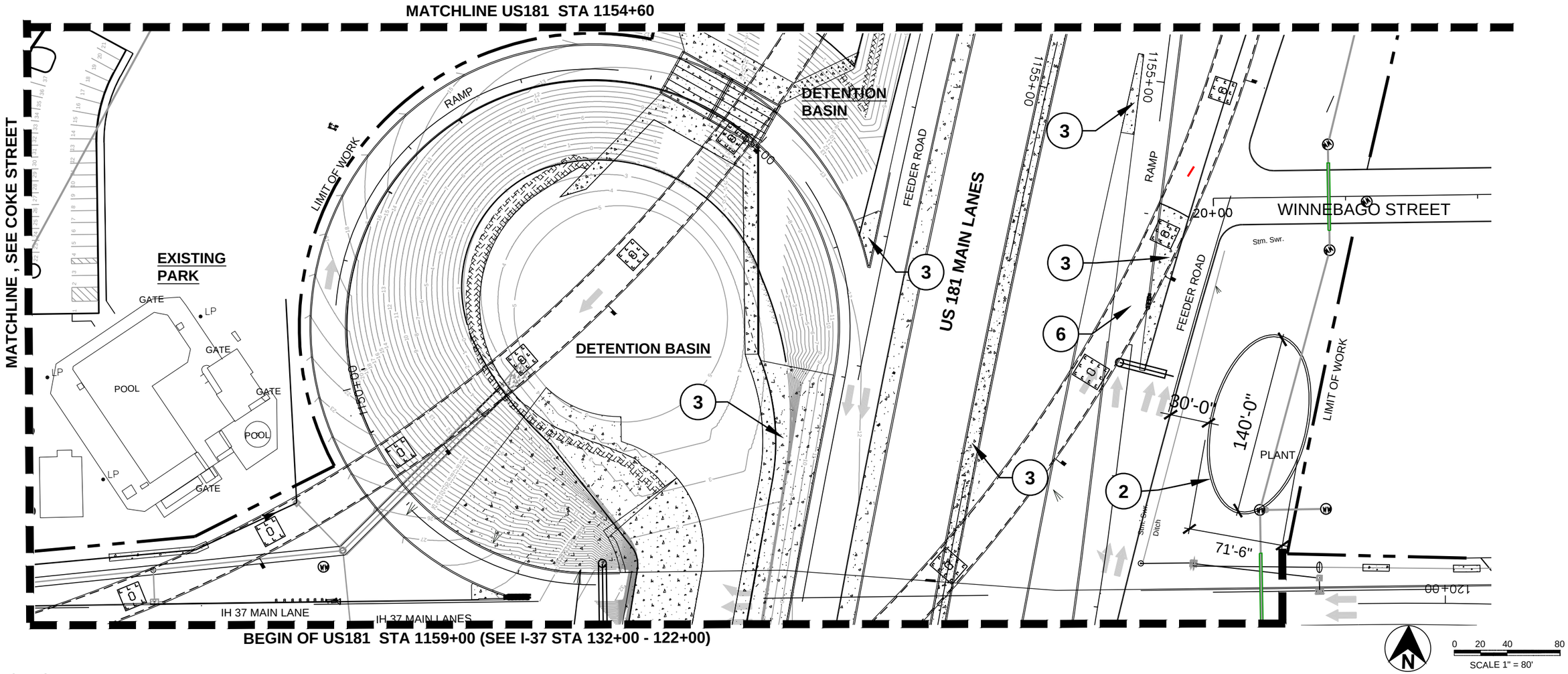

DRAWING LEGEND:

3 — DETAIL REFERENCE

SHEET QUANTITIES - LAYOUT			
ITEM	DESCRIPTION	UNIT	QNTY.
0529-6033	CONCRETE CURB (LANDSCAPE)	LF	330

DETAIL NOTES:

1. **NOT USED**
2. CONCRETE LANDSCAPE CURBING, **SEE CONSTRUCTION DETAILS SHEET 3 OF 10**
3. CONCRETE RIP RAP, **SEE CIVIL ENGINEERING DRAWINGS**
4. ACCESS RAMP, **SEE SITE CIVIL ENGINEERING DRAWINGS**
5. SIDEWALK, **SEE SITE CIVIL ENGINEERING DRAWINGS**
6. STREET SIGN - TYPICAL

GENERAL NOTES:

1. SEE LANDSCAPE GENERAL NOTES SHEET 1 OF 1 FOR ADDITIONAL INFORMATION

STATE OF TEXAS
MICHAEL P. MAUER
1510
REGISTERED
LANDSCAPE ARCHITECT
April 6, 2021

FLATIRON/DRAGADOS LLC

M2L Associates Inc.
Houston, Texas 77024
T: 713-722-8897 F: 713-722-8048
Landscape Architecture • Land Planning • Urban Design

Texas Department of Transportation ® 2016

US 181 HARBOR BRIDGE

LAYOUT PLAN

US 181
(STA 1159+00 -1154+60)

SHEET 01 OF 12

DESIGN	FED.RD. DIV.NO.	FEDERAL AID PROJECT NO.		HIGHWAY NO.
GRAPHICS	X	(See Title Sheet)		
	STATE	DISTRICT	COUNTY	SHEET NO.
CHECK	TEXAS	CRP	NUECES	B101
CHECK	CONTROL	SECTION	JOB	44
	0101	06	095	

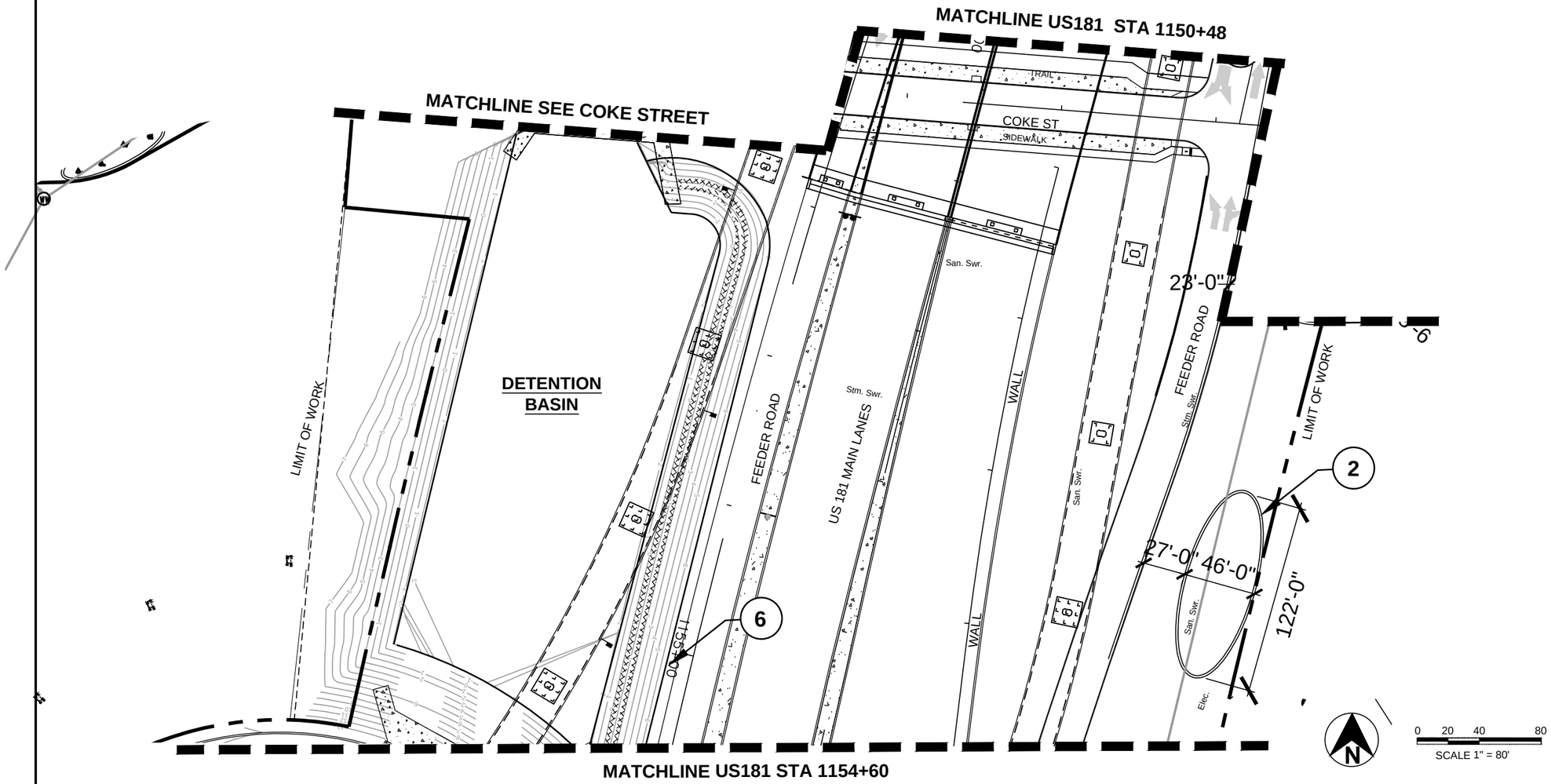

SHEET QUANTITIES - LAYOUT			
ITEM	DESCRIPTION	UNIT	QNTY.
0529-6033	CONCRETE CURB (LANDSCAPE)	LF	275

DETAIL NOTES:

1. **NOT USED**
2. CONCRETE LANDSCAPE CURBING, **SEE CONSTRUCTION DETAILS SHEET 3 OF 10**
3. CONCRETE RIP RAP, **SEE CIVIL ENGINEERING DRAWINGS**
4. ACCESS RAMP, **SEE SITE CIVIL ENGINEERING DRAWINGS**
5. SIDEWALK, **SEE SITE CIVIL ENGINEERING DRAWINGS**
6. STREET SIGN - TYPICAL

GENERAL NOTES:

1. SEE LANDSCAPE GENERAL NOTES SHEET 1 OF 1 FOR ADDITIONAL INFORMATION

STATE OF TEXAS
MICHAEL P. MAUER
1510
REGISTERED LANDSCAPE ARCHITECT
April 6, 2021

FLATIRON/DRAGADOS LLC

M2L Associates Inc.
Houston, Texas 77024
T: 713-722-8897 F: 713-722-8048
Landscape Architecture • Land Planning • Urban Design

Texas Department of Transportation ® 2016

US 181 HARBOR BRIDGE

LAYOUT PLAN

US 181
(STA 1150+48 -1154+60)

SHEET 02 OF 12

DESIGN	FED.RD. DIV.NO.	FEDERAL AID PROJECT NO.		HIGHWAY NO.
GRAPHICS	X	(See Title Sheet)		
	STATE	DISTRICT	COUNTY	SHEET NO.
CHECK	TEXAS	CRP	NUECES	B102
CHECK	CONTROL	SECTION	JOB	
	0101	06	095	45

GENERAL NOTES:

1. SEE LANDSCAPE GENERAL NOTES SHEET 1 OF 1 FOR ADDITIONAL INFORMATION

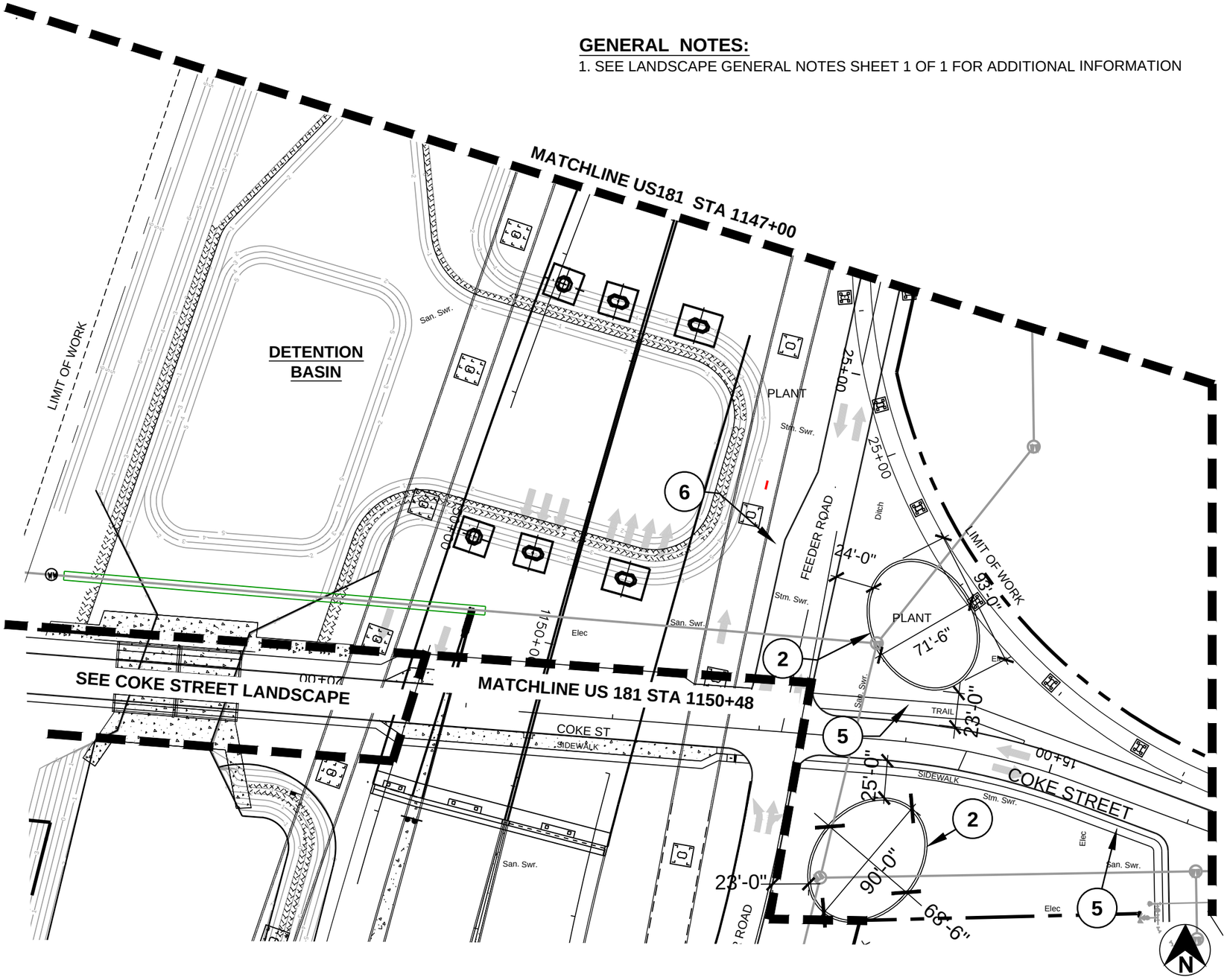

SHEET QUANTITIES - LAYOUT			
ITEM	DESCRIPTION	UNIT	QNTY.
0529-6033	CONCRETE CURB (LANDSCAPE)	LF	500

DETAIL NOTES:

1. **NOT USED**
2. CONCRETE LANDSCAPE CURBING, **SEE CONSTRUCTION DETAILS SHEET 3 OF 10**
3. CONCRETE RIP RAP, **SEE CIVIL ENGINEERING DRAWINGS**
4. ACCESS RAMP, **SEE SITE CIVIL ENGINEERING DRAWINGS**
5. SIDEWALK, **SEE SITE CIVIL ENGINEERING DRAWINGS**
6. STREET SIGN - TYPICAL

DRAWING LEGEND:

3 — DETAIL REFERENCE

STATE OF TEXAS
MICHAEL P. MAUER
1510
REGISTERED LANDSCAPE ARCHITECT
April 6, 2021

FLATIRON/DRAGADOS LLC

M2L Associates Inc.
Houston, Texas 77024
T: 713-722-8897 F: 713-722-8048
Landscape Architecture
Land Planning Urban Design

Texas Department of Transportation ® 2016

US 181 HARBOR BRIDGE

LAYOUT PLAN

US 181
(STA 1147+00 -1150+48)

SHEET 03 OF 12

DESIGN	FED.RD. DIV.NO.	FEDERAL AID PROJECT NO.		HIGHWAY NO.
GRAPHICS	X	(See Title Sheet)		
	STATE	DISTRICT	COUNTY	SHEET NO.
CHECK	TEXAS	CRP	NUECES	B103
CHECK	CONTROL	SECTION	JOB	46
	0101	06	095	

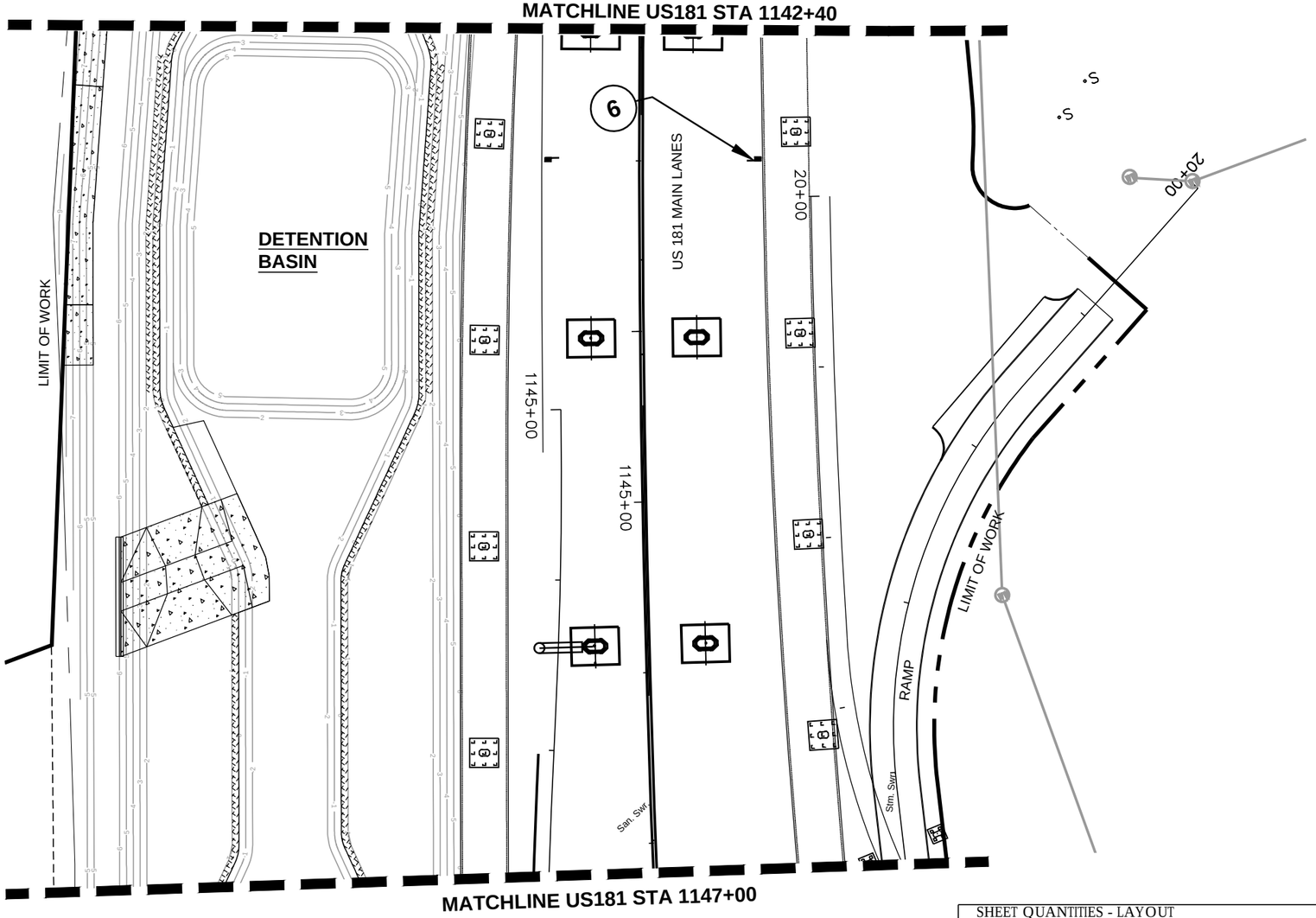

DRAWING LEGEND:

3 — DETAIL REFERENCE

0 20 40 80
SCALE 1" = 80'

SHEET QUANTITIES - LAYOUT			
ITEM	DESCRIPTION	UNIT	QNTY.
0529-6033	CONCRETE CURB (LANDSCAPE)	LF	0

DETAIL NOTES:

1. **NOT USED**
2. CONCRETE LANDSCAPE CURBING, **SEE CONSTRUCTION DETAILS SHEET 3 OF 10**
3. CONCRETE RIP RAP, **SEE CIVIL ENGINEERING DRAWINGS**
4. ACCESS RAMP, **SEE SITE CIVIL ENGINEERING DRAWINGS**
5. SIDEWALK, **SEE SITE CIVIL ENGINEERING DRAWINGS**
6. STREET SIGN - TYPICAL

GENERAL NOTES:

1. SEE LANDSCAPE GENERAL NOTES SHEET 1 OF 1 FOR ADDITIONAL INFORMATION

STATE OF TEXAS
MICHAEL P. MAUER
1510
REGISTERED LANDSCAPE ARCHITECT
April 6, 2021

FLATIRON/DRAGADOS LLC

M2L Associates Inc.
Houston, Texas 77024
T: 713-722-8897 F: 713-722-8048
Landscape Architecture · Land Planning · Urban Design

Texas Department of Transportation ® 2016

US 181 HARBOR BRIDGE

LAYOUT PLAN

US 181
(STA 1142+40 -1147+00)

SHEET 04 OF 12

DESIGN	FED.RD. DIV.NO.	FEDERAL AID PROJECT NO.		HIGHWAY NO.
GRAPHICS	X	(See Title Sheet)		
	STATE	DISTRICT	COUNTY	SHEET NO.
CHECK	TEXAS	CRP	NUECES	B104
CHECK	CONTROL	SECTION	JOB	47
	0101	06	095	

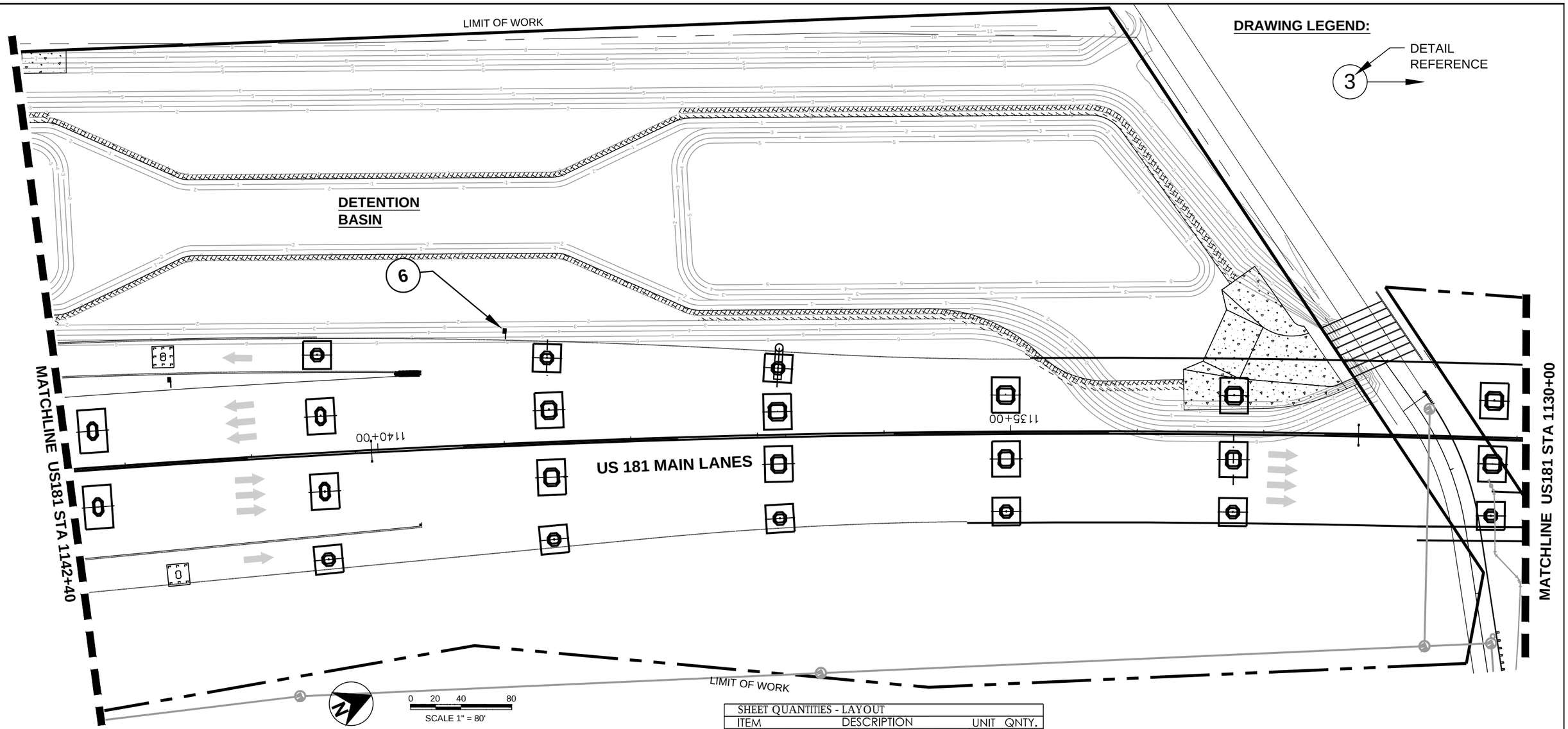

SHEET QUANTITIES - LAYOUT			
ITEM	DESCRIPTION	UNIT	QNTY.
0529-6033	CONCRETE CURB (LANDSCAPE)	LF	0

DETAIL NOTES:

1. **NOT USED**
2. CONCRETE LANDSCAPE CURBING, **SEE CONSTRUCTION DETAILS SHEET 3 OF 10**
3. CONCRETE RIP RAP, **SEE CIVIL ENGINEERING DRAWINGS**
4. ACCESS RAMP, **SEE SITE CIVIL ENGINEERING DRAWINGS**
5. SIDEWALK, **SEE SITE CIVIL ENGINEERING DRAWINGS**
6. STREET SIGN - TYPICAL

GENERAL NOTES:

1. SEE LANDSCAPE GENERAL NOTES SHEET 1 OF 1 FOR ADDITIONAL INFORMATION

STATE OF TEXAS
MICHAEL P. MAUER
1510
REGISTERED LANDSCAPE ARCHITECT
April 6, 2021

FLATIRON/DRAGADOS LLC

M2L Associates Inc.
Houston, Texas 77024
T: 713-722-8897 F: 713-722-8048
Landscape Architecture • Land Planning • Urban Design

Texas Department of Transportation ©2016

US 181 HARBOR BRIDGE

LAYOUT PLAN

US 181
(STA 1142+40 -1130+00)

SHEET 05 OF 12

DESIGN	FED.RD. DIV.NO.	FEDERAL AID PROJECT NO.		HIGHWAY NO.
GRAPHICS	X	(See Title Sheet)		
	STATE	DISTRICT	COUNTY	SHEET NO.
CHECK	TEXAS	CRP	NUECES	B105
CHECK	CONTROL	SECTION	JOB	48
	0101	06	095	

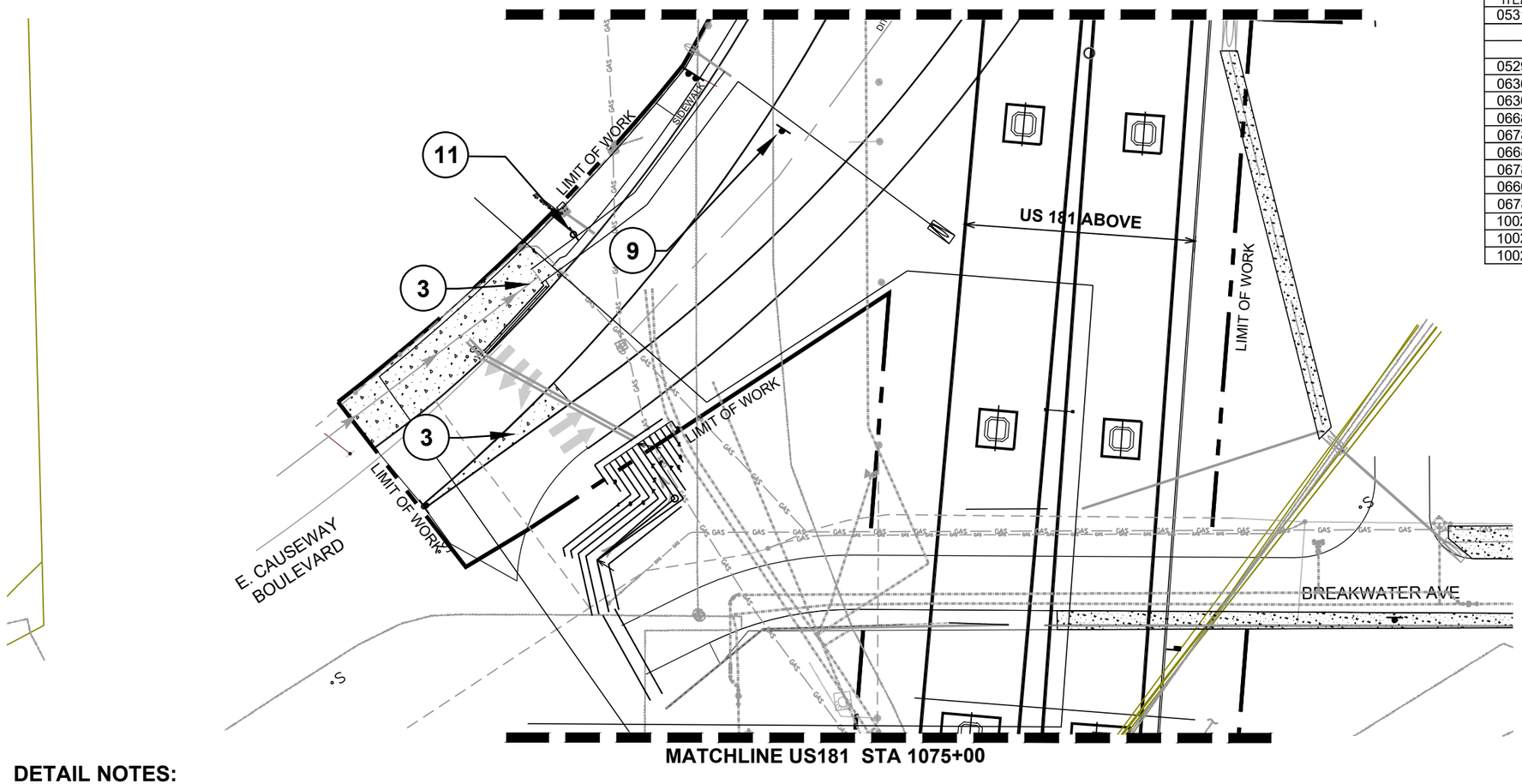

SHEET QUANTITIES - LAYOUT			
ITEM	DESCRIPTION	UNIT	QNTY.
0531-6001	CONCRETE SIDEWALKS (4")	SY	50
	NOT USED		
	NOT USED		
0529-6033	CONCRETE CURB (LANDSCAPE)	LF	0
0636-6001	ALUMINUM SIGN (TYPE A)	EA	0
0636-6002	ALUMINUM SIGN (TYPE G)	EA	0
0668-6096	PREFAB PAV MRK TY C (W) (BIKE SYMBOL)	EA	1
0678-6028	PV SURF PREPFOR MRK (BIKE SYMBOL)	EA	1
0668-6094	PREFAB PAV MRK TY C (W) (BIKE ARROW)	EA	1
0678-6026	PV SURF PREPFOR MRK (BIKE ARROW)	EA	1
0666-6180	FLL PAV MARK TY II (W) (12")	LF	0
0678-6006	PAV SUR PREP FOR MARK (12")	LF	0
1002-6005	LANDSCAPE AMENITY (TY 4) *bike rack*	EA	0
1002-6006	LANDSCAPE AMENITY (TY 5) *trail map*	EA	1
1002-6016	LANDSCAPE AMENITY (TY 15) *info plaque*	EA	1

DRAWING LEGEND:

3 — DETAIL REFERENCE

0 20 40 80
SCALE 1" = 80'

DETAIL NOTES:

1. TRAIL ROUTE SURFACE MARKING, **SEE DETAIL #2, CONSTRUCTION DETAILS 2 OF 10**
2. CONCRETE LANDSCAPE CURB, **SEE CONSTRUCTION DETAILS SHEET 3 OF 10**
3. CONCRETE RIP RAP, **SEE CIVIL ENGINEERING DRAWINGS**
4. ACCESS RAMP, **SEE SITE CIVIL ENGINEERING DRAWINGS**
5. SIDEWALK, **SEE SITE CIVIL ENGINEERING DRAWINGS**
6. TRAIL CROSSING SIGN(MUTCH W11-15/P), **SEE CONSTRUCTION DETAILS SHEET 3 OF 10**
7. TRAIL ROUTE SIGN, **SEE CONSTRUCTION DETAILS SHEET 3 OF 10**
8. SHARED USE PATH CROSSING, **SEE DETAIL #2, CONSTRUCTION DETAIL SHEET 5 OF 10**
9. STREET SIGNS- TYPICAL
10. TRAIL SWITCHBACK, **SEE CIVIL DRAWINGS**
11. HARBOR BRIDGE INFORMATIONAL PLAQUE PER NC 0413, **SEE DETAIL #3, SUP 103.**

GENERAL NOTES:

1. SEE LANDSCAPE GENERAL NOTES SHEET 1 OF 1 FOR ADDITIONAL INFORMATION

STATE OF TEXAS
MICHAEL P. MAUER
1510
REGISTERED LANDSCAPE ARCHITECT
SEP 9, 2022

FLATIRON/DRAGADOS LLC

M2L Associates Inc.
Houston, Texas 77024
T: 713-722-8897 F: 713-722-8048
•Landscape Architecture•
•Land Planning• Urban Design •

Texas Department of Transportation ®2016

US 181 HARBOR BRIDGE

LAYOUT PLAN

US 181
(STA 1075+00 -1071+00)

SHEET 06 OF 12

DESIGN	FED.RD. DIV.NO.	FEDERAL AID PROJECT NO.		HIGHWAY NO.
GRAPHICS	X	(See Title Sheet)		
	STATE	DISTRICT	COUNTY	SHEET NO.
CHECK	TEXAS	CRP	NUECES	B106
CHECK	CONTROL	SECTION	JOB	
	0101	06	095	49

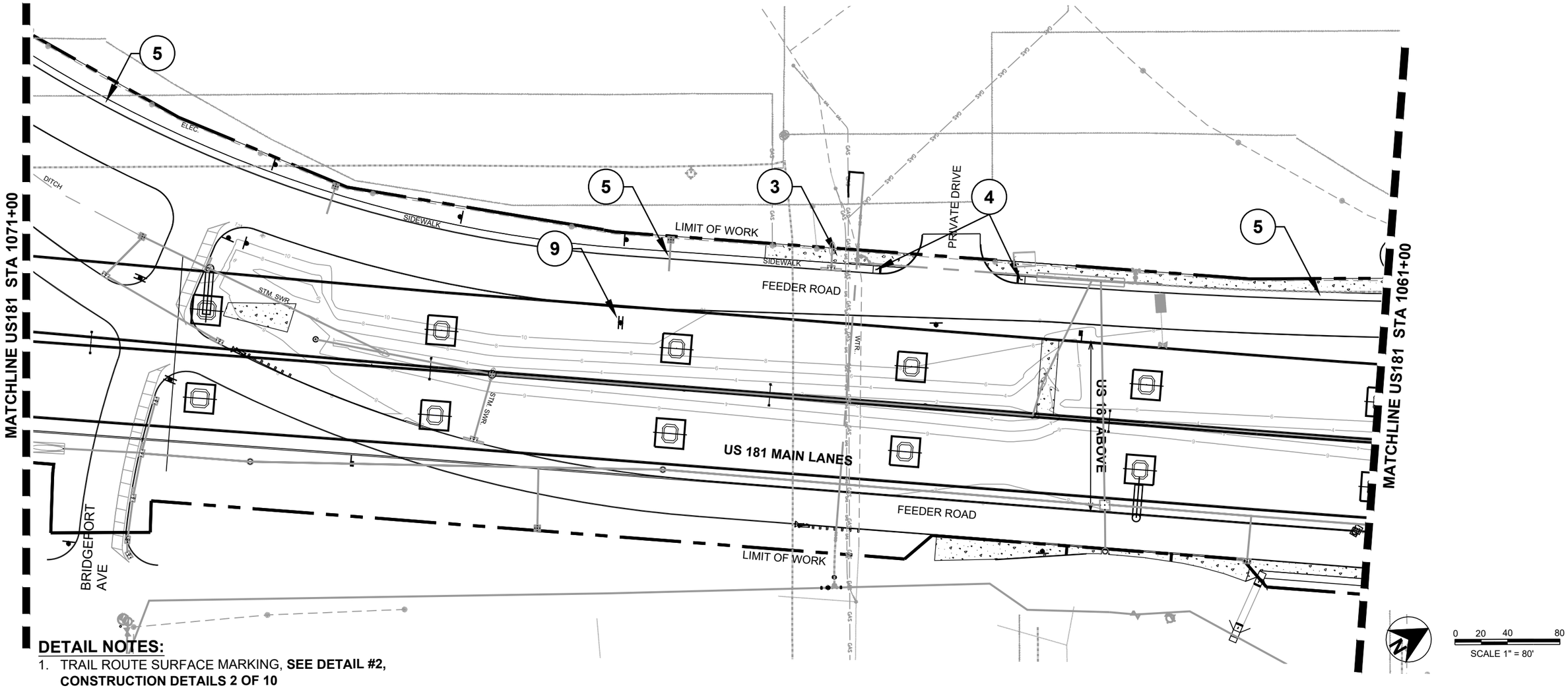

DETAIL NOTES:

1. TRAIL ROUTE SURFACE MARKING, **SEE DETAIL #2, CONSTRUCTION DETAILS 2 OF 10**
2. CONCRETE LANDSCAPE CURB, **SEE CONSTRUCTION DETAILS SHEET 3 OF 10**
3. CONCRETE RIP RAP, **SEE CIVIL ENGINEERING DRAWINGS**
4. ACCESS RAMP, **SEE SITE CIVIL ENGINEERING DRAWINGS**
5. SIDEWALK, **SEE SITE CIVIL ENGINEERING DRAWINGS**
6. TRAIL CROSSING SIGN(MUTCH W11-15/P), **SEE CONSTRUCTION DETAILS SHEET 3 OF 10**
7. TRAIL ROUTE SIGN, **SEE CONSTRUCTION DETAILS SHEET 3 OF 10**
8. SHARED USE PATH CROSSING, **SEE DETAIL #2, CONSTRUCTION DETAIL SHEET 5 OF 10**
9. STREET SIGNS- TYPICAL
10. TRAIL SWITCHBACK, **SEE CIVIL DRAWINGS**

SHEET QUANTITIES - LAYOUT

ITEM	DESCRIPTION	UNIT	QNTY.
0531-6001	CONCRETE SIDEWALKS (4")	SY	0
	NOT USED		
	NOT USED		
0529-6033	CONCRETE CURB (LANDSCAPE)	LF	0
0636-6001	ALUMINUM SIGN (TYPE A)	EA	0
0636-6002	ALUMINUM SIGN (TYPE G)	EA	0
0668-6096	PREFAB PAV MRK TY C (W) (BIKE SYMBOL)	EA	0
0678-6028	PV SURF PREPFOR MRK (BIKE SYMBOL)	EA	0
0668-6094	PREFAB PAV MRK TY C (W) (BIKE ARROW)	EA	0
0678-6026	PV SURF PREPFOR MRK (BIKE ARROW)	EA	0
0666-6180	FLL PAV MARK TY II (W) (12")	LF	0
0678-6006	PAV SUR PREP FOR MARK (12")	LF	0
1002-6005	LANDSCAPE AMENITY (TY 4) *bike rack*	EA	0
1002-6006	LANDSCAPE AMENITY (TY 5) *trail map*	EA	0

DRAWING LEGEND:

3 — DETAIL REFERENCE

STATE OF TEXAS
MICHAEL P. MAUER
1510
REGISTERED
LANDSCAPE ARCHITECT
February 7, 2022

FLATIRON/DRAGADOS LLC

M2L Associates Inc.
Houston, Texas 77024
T: 713-722-8897 F: 713-722-8048
•Landscape Architecture•
•Land Planning• Urban Design•

Texas Department of Transportation ® 2016

US 181 HARBOR BRIDGE

LAYOUT PLAN

US 181
(STA 1071+00 -1061+00)

SHEET 07 OF 12

DESIGN	FED.RD. DIV.NO.	FEDERAL AID PROJECT NO.		HIGHWAY NO.
GRAPHICS	X	(See Title Sheet)		
	STATE	DISTRICT	COUNTY	SHEET NO.
CHECK	TEXAS	CRP	NUECES	B107
CHECK	CONTROL	SECTION	JOB	
	0101	06	095	50

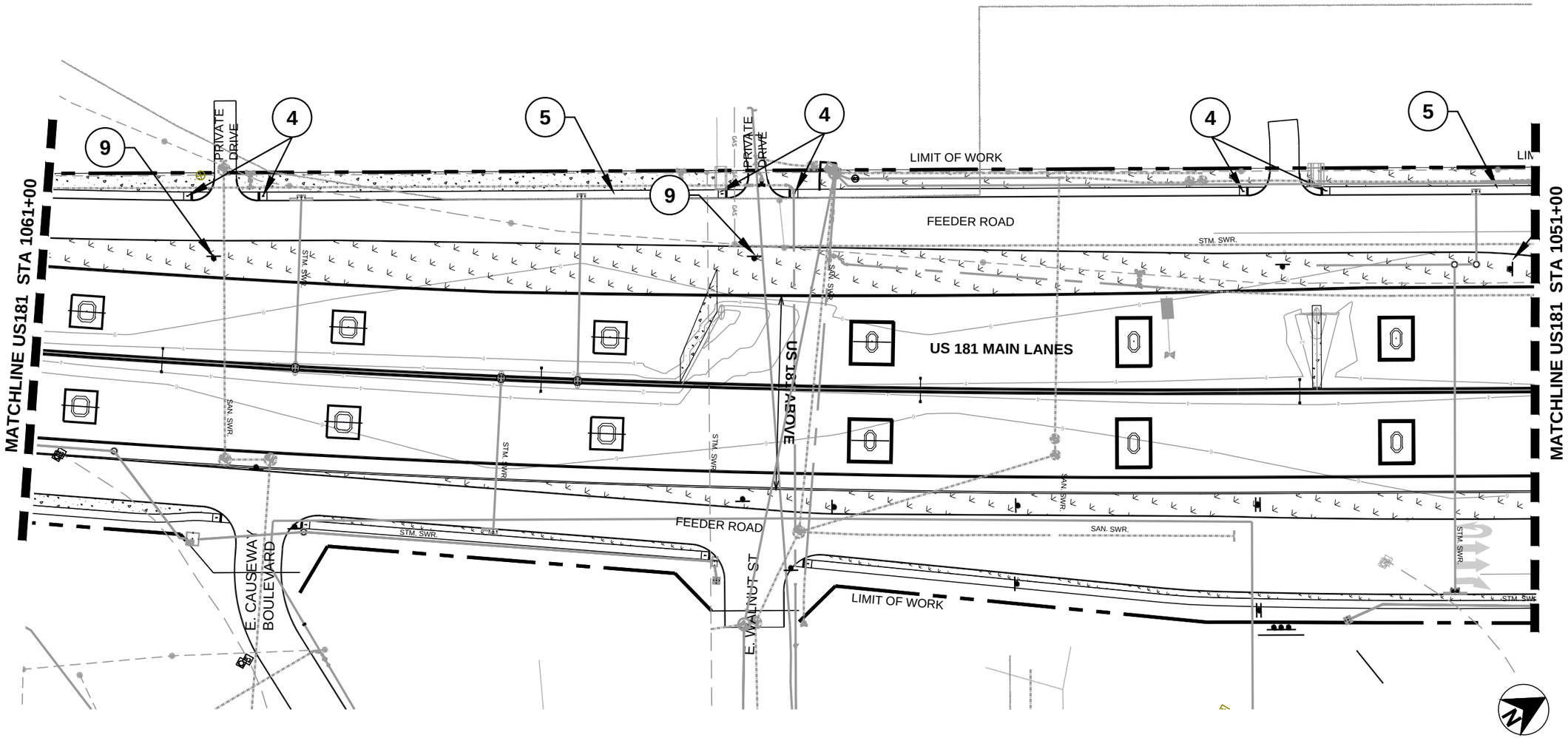

DETAIL NOTES:

1. TRAIL ROUTE SURFACE MARKING, **SEE DETAIL #2, CONSTRUCTION DETAILS 2 OF 10**
2. CONCRETE LANDSCAPE CURB, **SEE CONSTRUCTION DETAILS SHEET 3 OF 10**
3. CONCRETE RIP RAP, **SEE CIVIL ENGINEERING DRAWINGS**
4. ACCESS RAMP, **SEE SITE CIVIL ENGINEERING DRAWINGS**
5. SIDEWALK, **SEE SITE CIVIL ENGINEERING DRAWINGS**
6. TRAIL CROSSING SIGN(MUTCH W11-15/P), **SEE CONSTRUCTION DETAILS SHEET 3 OF 10**
7. TRAIL ROUTE SIGN, **SEE CONSTRUCTION DETAILS SHEET 35 OF 10**
8. SHARED USE PATH CROSSING, **SEE DETAIL #2, CONSTRUCTION DETAIL SHEET 5 OF 10**
9. STREET SIGNS- TYPICAL
10. TRAIL SWITCHBACK, **SEE CIVIL DRAWINGS**

DRAWING LEGEND:

3 — DETAIL REFERENCE

GENERAL NOTES:

1. SEE LANDSCAPE GENERAL NOTES SHEET 1 OF 1 FOR ADDITIONAL INFORMATION

SHEET QUANTITIES - LAYOUT

ITEM	DESCRIPTION	UNIT	QNTY.
0531-6001	CONCRETE SIDEWALKS (4")	SY	0
	NOT USED		
	NOT USED		
0529-6033	CONCRETE CURB (LANDSCAPE)	LF	0
0636-6001	ALUMINUM SIGN (TYPE A)	EA	0
0636-6002	ALUMINUM SIGN (TYPE G)	EA	0
0668-6096	PREFAB PAV MRK TY C (W) (BIKE SYMBOL)	EA	0
0678-6028	PV SURF PREPFOR MRK (BIKE SYMBOL)	EA	0
0668-6094	PREFAB PAV MRK TY C (W) (BIKE ARROW)	EA	0
0678-6026	PV SURF PREPFOR MRK (BIKE ARROW)	EA	0
0666-6180	FLL PAV MARK TY II (W) (12")	LF	0
0678-6006	PAV SUR PREP FOR MARK (12")	LF	0
1002-6005	LANDSCAPE AMENITY (TY 4) *bike rack*	EA	0
1002-6006	LANDSCAPE AMENITY (TY 5) *trail map*	EA	0

STATE OF TEXAS
MICHAEL P. MAUER
1510
REGISTERED LANDSCAPE ARCHITECT
April 6, 2021

FLATIRON/DRAGADOS LLC

M2L Associates Inc.
Houston, Texas 77024
T: 713-722-8897 F: 713-722-8048
Landscape Architecture • Land Planning • Urban Design

Texas Department of Transportation © 2016

US 181 HARBOR BRIDGE

LAYOUT PLAN

US 181
(STA 1061+00 -1051+00)

SHEET 08 OF 12

DESIGN	FED.RD. DIV.NO.	FEDERAL AID PROJECT NO.		HIGHWAY NO.
GRAPHICS	X	(See Title Sheet)		
	STATE	DISTRICT	COUNTY	SHEET NO.
CHECK	TEXAS	CRP	NUECES	B108
CHECK	CONTROL	SECTION	JOB	
	0101	06	095	51

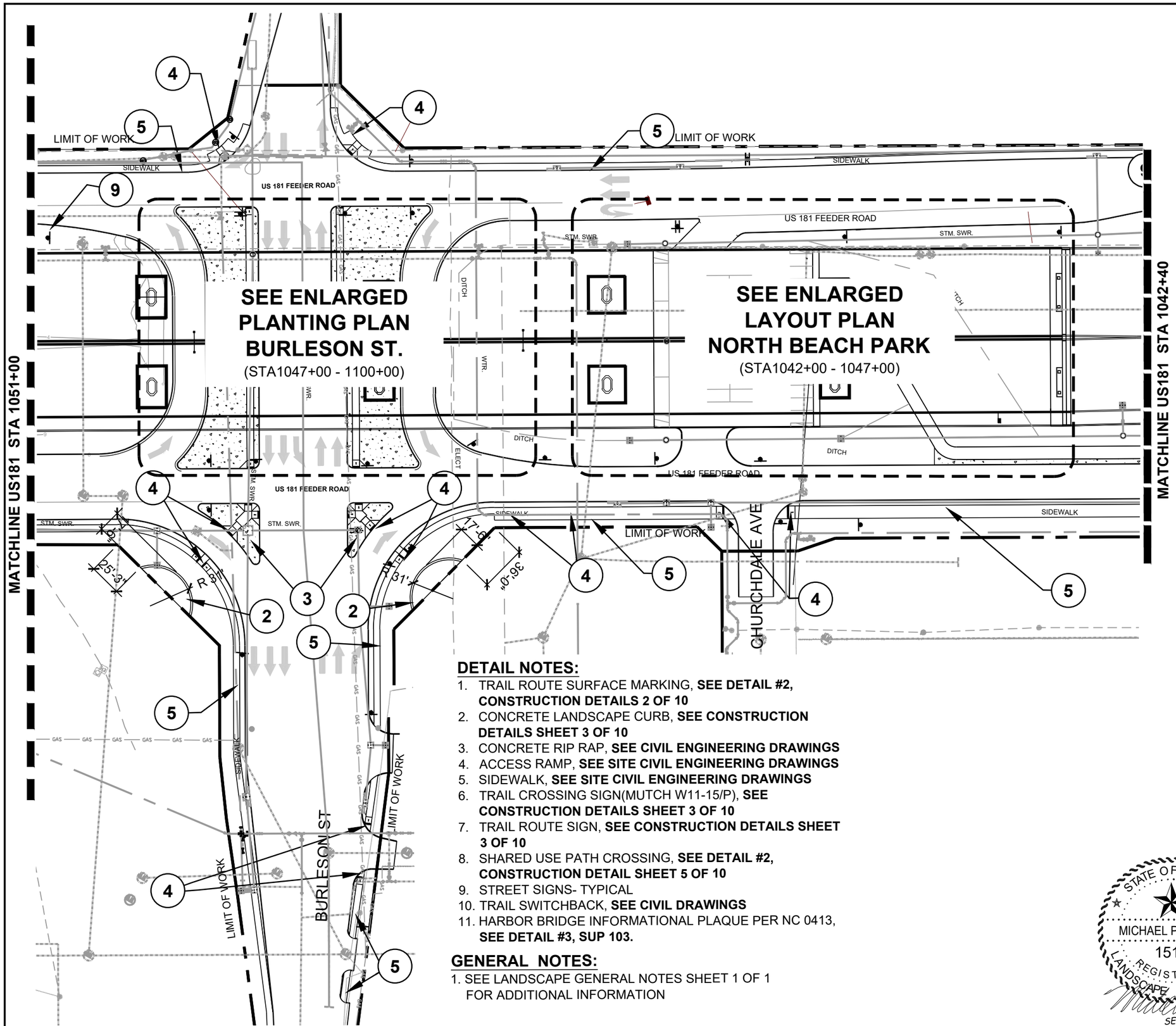

(SHEET QUANTITIES INCLUDE NORTH SUP PARKING)

SHEET QUANTITIES - LAYOUT			
ITEM	DESCRIPTION	UNIT	QNTY.
0531-6001	CONCRETE SIDEWALKS (4")	SY	60
	NOT USED		
	NOT USED		
0529-6033	CONCRETE CURB (LANDSCAPE)	LF	142
0636-6001	ALUMINUM SIGN (TYPE A)	EA	2
0636-6002	ALUMINUM SIGN (TYPE G)	EA	0
0668-6096	PREFAB PAV MRK TY C (W) (BIKE SYMBOL)	EA	1
0678-6028	PV SURF PREPFOR MRK (BIKE SYMBOL)	EA	1
0668-6094	PREFAB PAV MRK TY C (W) (BIKE ARROW)	EA	1
0678-6026	PV SURF PREPFOR MRK (BIKE ARROW)	EA	1
0666-6180	FLL PAV MARK TY II (W) (12")	LF	0
0678-6006	PAV SUR PREP FOR MARK (12")	LF	0
1002-6005	LANDSCAPE AMENITY (TY 4) *bike rack*	EA	6
1002-6006	LANDSCAPE AMENITY (TY 5) *trail map*	EA	1
1002-6016	LANDSCAPE AMENITY (TY 15) *info plaque*	EA	0

DRAWING LEGEND:

3 — DETAIL REFERENCE

0 20 40 80
SCALE 1" = 80'

DETAIL NOTES:

1. TRAIL ROUTE SURFACE MARKING, **SEE DETAIL #2, CONSTRUCTION DETAILS 2 OF 10**
2. CONCRETE LANDSCAPE CURB, **SEE CONSTRUCTION DETAILS SHEET 3 OF 10**
3. CONCRETE RIP RAP, **SEE CIVIL ENGINEERING DRAWINGS**
4. ACCESS RAMP, **SEE SITE CIVIL ENGINEERING DRAWINGS**
5. SIDEWALK, **SEE SITE CIVIL ENGINEERING DRAWINGS**
6. TRAIL CROSSING SIGN(MUTCH W11-15/P), **SEE CONSTRUCTION DETAILS SHEET 3 OF 10**
7. TRAIL ROUTE SIGN, **SEE CONSTRUCTION DETAILS SHEET 3 OF 10**
8. SHARED USE PATH CROSSING, **SEE DETAIL #2, CONSTRUCTION DETAIL SHEET 5 OF 10**
9. STREET SIGNS- TYPICAL
10. TRAIL SWITCHBACK, **SEE CIVIL DRAWINGS**
11. HARBOR BRIDGE INFORMATIONAL PLAQUE PER NC 0413, **SEE DETAIL #3, SUP 103.**

GENERAL NOTES:

1. SEE LANDSCAPE GENERAL NOTES SHEET 1 OF 1 FOR ADDITIONAL INFORMATION

STATE OF TEXAS
MICHAEL P. MAUER
1510
REGISTERED LANDSCAPE ARCHITECT
SEP 9, 2022

FLATIRON/DRAGADOS LLC

M2L Associates Inc.
Houston, Texas 77024
T: 713-722-8897 F: 713-722-8048
•Landscape Architecture•
•Land Planning•Urban Design•

Texas Department of Transportation ® 2016

US 181 HARBOR BRIDGE

LAYOUT PLAN

US 181
(STA 1051+00 -1042+40)

SHEET 09 OF 12

DESIGN	FED.RD. DIV.NO.	FEDERAL AID PROJECT NO.		HIGHWAY NO.
GRAPHICS	X	(See Title Sheet)		
	STATE	DISTRICT	COUNTY	SHEET NO.
CHECK	TEXAS	CRP	NUECES	B109
CHECK	CONTROL	SECTION	JOB	
	0101	06	095	52

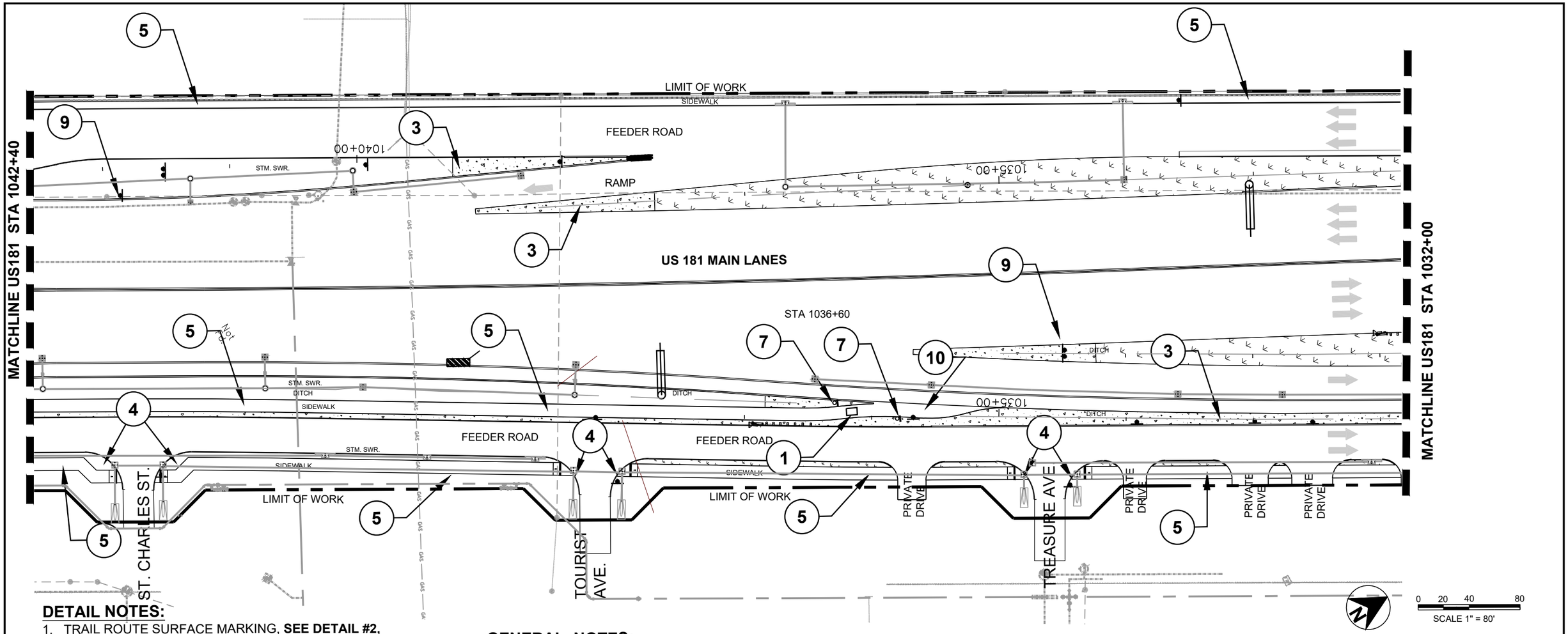

DETAIL NOTES:

1. TRAIL ROUTE SURFACE MARKING, **SEE DETAIL #2, CONSTRUCTION DETAILS 2 OF 10**
2. CONCRETE LANDSCAPE CURB, **SEE CONSTRUCTION DETAILS SHEET 3 OF 10**
3. CONCRETE RIP RAP, **SEE CIVIL ENGINEERING DRAWINGS**
4. ACCESS RAMP, **SEE SITE CIVIL ENGINEERING DRAWINGS**
5. SIDEWALK, **SEE SITE CIVIL ENGINEERING DRAWINGS**
6. TRAIL CROSSING SIGN(MUTCH W11-15/P), **SEE CONSTRUCTION DETAILS SHEET 3 OF 10**
7. TRAIL ROUTE SIGN, **SEE CONSTRUCTION DETAILS SHEET 3 OF 10**
8. SHARED USE PATH CROSSING, **SEE DETAIL #2, CONSTRUCTION DETAIL SHEET 5 OF 10**
9. STREET SIGNS- TYPICAL
10. TRAIL SWITCHBACK, **SEE CIVIL DRAWINGS**
11. HARBOR BRIDGE INFORMATIONAL PLAQUE PER NC 0413, **SEE DETAIL #3, SUP 103.**

DRAWING LEGEND:

3 — DETAIL REFERENCE

GENERAL NOTES:

1. SEE LANDSCAPE GENERAL NOTES SHEET 1 OF 1 FOR ADDITIONAL INFORMATION

(SHEET QUANTITIES DO INCLUDE NORTH SUP ENTRANCE)

SHEET QUANTITIES - LAYOUT

ITEM	DESCRIPTION	UNIT	QNTY.
0531-6001	CONCRETE SIDEWALKS (4")	SY	0
	NOT USED		
	NOT USED		
0529-6033	CONCRETE CURB (LANDSCAPE)	LF	0
0636-6001	ALUMINUM SIGN (TYPE A)	EA	0
0636-6002	ALUMINUM SIGN (TYPE G)	EA	2
0668-6096	PREFAB PAV MRK TY C (W) (BIKE SYMBOL)	EA	1
0678-6028	PV SURF PREPFOR MRK (BIKE SYMBOL)	EA	1
0668-6094	PREFAB PAV MRK TY C (W) (BIKE ARROW)	EA	1
0678-6026	PV SURF PREPFOR MRK (BIKE ARROW)	EA	1
0666-6180	FLL PAV MARK TY II (W) (12")	LF	0
0678-6006	PAV SUR PREP FOR MARK (12")	LF	0
1002-6005	LANDSCAPE AMENITY (TY 4) *bike rack*	EA	0
1002-6006	LANDSCAPE AMENITY (TY 5) *trail map*	EA	0
1002-6016	LANDSCAPE AMENITY (TY 15) *info plaque*	EA	0

STATE OF TEXAS
MICHAEL P. MAUER
1510
REGISTERED LANDSCAPE ARCHITECT
SEP 9, 2022

FLATIRON/DRAGADOS LLC

M2L Associates Inc.
Houston, Texas 77024
T: 713-722-8897 F: 713-722-8048
•Landscape Architecture•
•Land Planning• Urban Design•

Texas Department of Transportation ® 2016

US 181 HARBOR BRIDGE

LAYOUT PLAN

US 181
(STA 1042+40 -1032+00)

SHEET 10 OF 12

DESIGN	FED.RD. DIV.NO.	FEDERAL AID PROJECT NO.		HIGHWAY NO.
GRAPHICS	X	(See Title Sheet)		
	STATE	DISTRICT	COUNTY	SHEET NO.
CHECK	TEXAS	CRP	NUECES	B110
CHECK	CONTROL	SECTION	JOB	
	0101	06	095	53

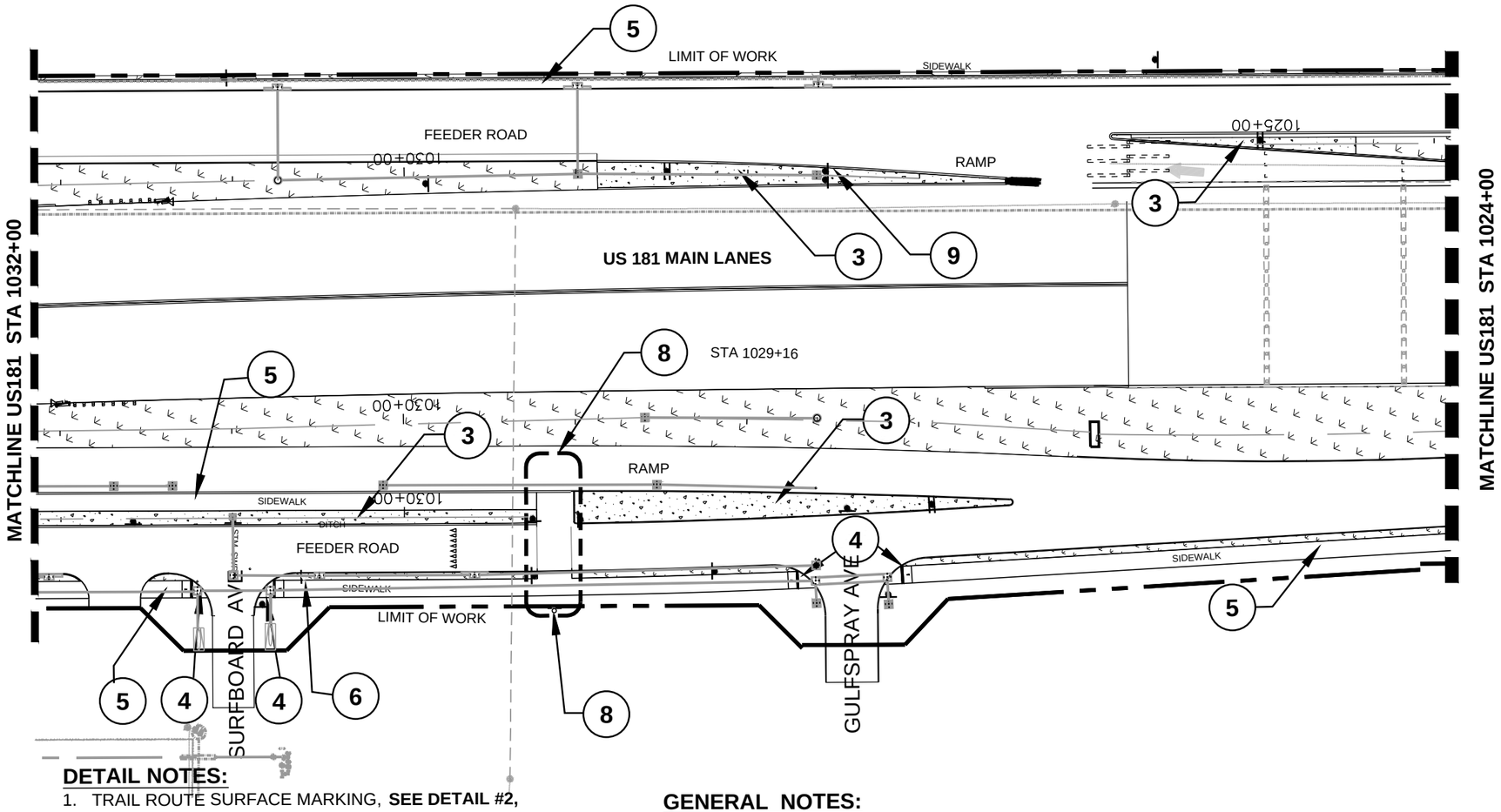

0 20 40 80
SCALE 1" = 80'

DETAIL NOTES:

1. TRAIL ROUTE SURFACE MARKING, **SEE DETAIL #2, CONSTRUCTION DETAILS 2 OF 10**
2. CONCRETE LANDSCAPE CURB, **SEE CONSTRUCTION DETAILS SHEET 3 OF 10**
3. CONCRETE RIP RAP, **SEE CIVIL ENGINEERING DRAWINGS**
4. ACCESS RAMP, **SEE SITE CIVIL ENGINEERING DRAWINGS**
5. SIDEWALK, **SEE SITE CIVIL ENGINEERING DRAWINGS**
6. TRAIL CROSSING SIGN(MUTCH W11-15/P), **SEE CONSTRUCTION DETAILS SHEET 3 OF 10**
7. TRAIL ROUTE SIGN, **SEE CONSTRUCTION DETAILS SHEET 35 OF 10**
8. SHARED USE PATH CROSSING, **SEE DETAIL #2, CONSTRUCTION DETAIL SHEET 5 OF 10**
9. STREET SIGNS- TYPICAL
10. TRAIL SWITCHBACK, **SEE CIVIL DRAWINGS**

GENERAL NOTES:

1. SEE LANDSCAPE GENERAL NOTES SHEET 1 OF 1 FOR ADDITIONAL INFORMATION

(SHEET QUANTITIES DO INCLUDE NORTH SUP TRAIL HEAD)

SHEET QUANTITIES - LAYOUT

ITEM	DESCRIPTION	UNIT	QNTY.
0531-6001	CONCRETE SIDEWALKS (4")	SY	50
	NOT USED		
	NOT USED		
0529-6033	CONCRETE CURB (LANDSCAPE)	LF	0
0636-6001	ALUMINUM SIGN (TYPE A)	EA	0
0636-6002	ALUMINUM SIGN (TYPE G)	EA	1
0668-6096	PREFAB PAV MRK TY C (W) (BIKE SYMBOL)	EA	1
0678-6028	PV SURF PREPFOR MRK (BIKE SYMBOL)	EA	1
0668-6094	PREFAB PAV MRK TY C (W) (BIKE ARROW)	EA	1
0678-6026	PV SURF PREPFOR MRK (BIKE ARROW)	EA	1
0666-6180	FLL PAV MARK TY II (W) (12")	LF	120
0678-6006	PAV SUR PREP FOR MARK (12")	LF	120
1002-6005	LANDSCAPE AMENITY (TY 4) *bike rack*	EA	0
1002-6006	LANDSCAPE AMENITY (TY 5) *trail map*	EA	1

DRAWING LEGEND:

3 — DETAIL REFERENCE

STATE OF TEXAS
MICHAEL P. MAUER
1510
REGISTERED
LANDSCAPE ARCHITECT
April 6, 2021

FLATIRON/DRAGADOS LLC

M2L Associates Inc.
Houston, Texas 77024
T: 713-722-8897 F: 713-722-8048
Landscape Architecture • Land Planning • Urban Design

Texas Department of Transportation ® 2016

US 181 HARBOR BRIDGE

LAYOUT PLAN

US 181
(STA 1032+00 -1024+00)

SHEET 11 OF 12

DESIGN	FED.RD. DIV.NO.	FEDERAL AID PROJECT NO.		HIGHWAY NO.
GRAPHICS	X	(See Title Sheet)		
	STATE	DISTRICT	COUNTY	SHEET NO.
CHECK	TEXAS	CRP	NUECES	B111
CHECK	CONTROL	SECTION	JOB	
	0101	06	095	54

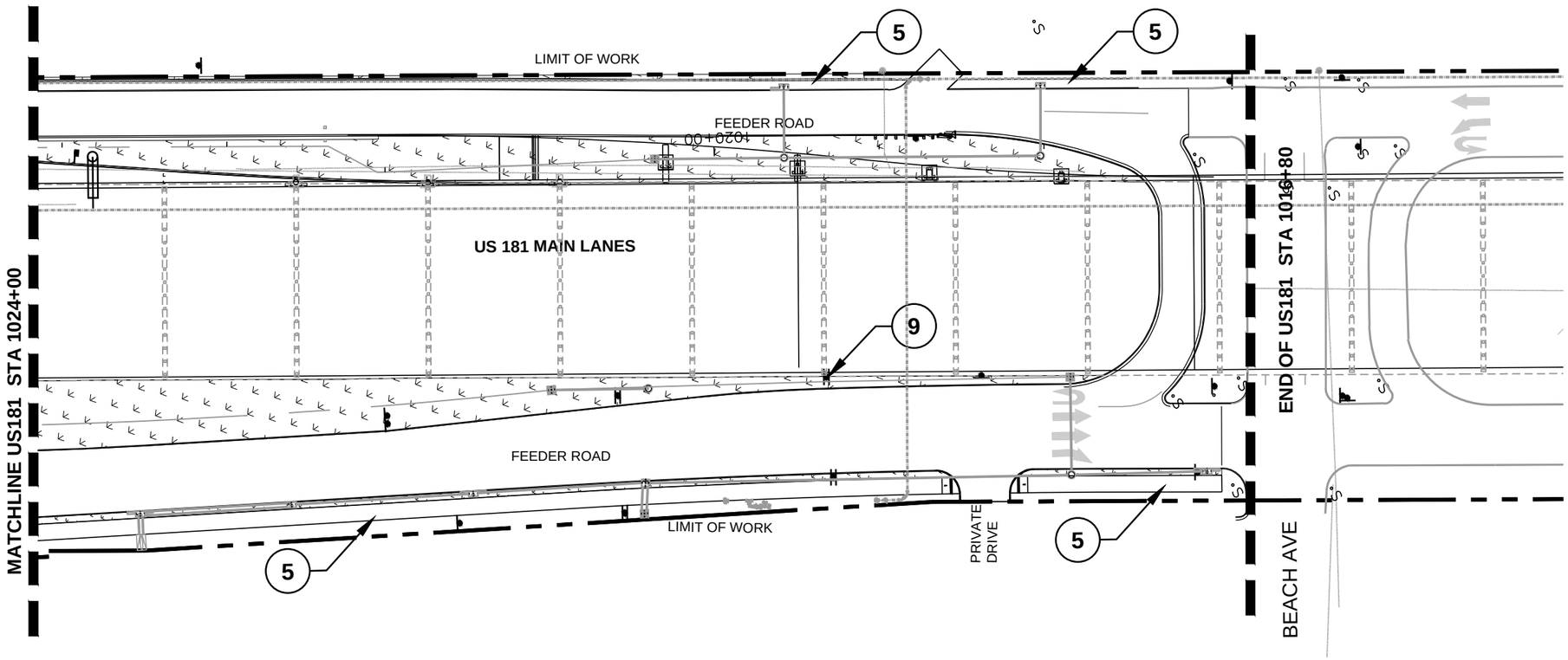

0 20 40 80
SCALE 1" = 80'

DETAIL NOTES:

1. TRAIL ROUTE SURFACE MARKING, **SEE DETAIL #2, CONSTRUCTION DETAILS 2 OF 10**
2. CONCRETE LANDSCAPE CURB, **SEE CONSTRUCTION DETAILS SHEET 3 OF 10**
3. CONCRETE RIP RAP, **SEE CIVIL ENGINEERING DRAWINGS**
4. ACCESS RAMP, **SEE SITE CIVIL ENGINEERING DRAWINGS**
5. SIDEWALK, **SEE SITE CIVIL ENGINEERING DRAWINGS**
6. TRAIL CROSSING SIGN(MUTCH W11-15/P), **SEE CONSTRUCTION DETAILS SHEET 3 OF 10**
7. TRAIL ROUTE SIGN, **SEE CONSTRUCTION DETAILS SHEET 35 OF 10**
8. SHARED USE PATH CROSSING, **SEE DETAIL #2, CONSTRUCTION DETAIL SHEET 5 OF 10**
9. STREET SIGNS- TYPICAL
10. TRAIL SWITCHBACK, **SEE CIVIL DRAWINGS**

GENERAL NOTES:

1. SEE LANDSCAPE GENERAL NOTES SHEET 1 OF 1 FOR ADDITIONAL INFORMATION

SHEET QUANTITIES - LAYOUT

ITEM	DESCRIPTION	UNIT	QNTY.
0531-6001	CONCRETE SIDEWALKS (4")	SY	0
	NOT USED		
	NOT USED		
0529-6033	CONCRETE CURB (LANDSCAPE)	LF	0
0636-6001	ALUMINUM SIGN (TYPE A)	EA	0
0636-6002	ALUMINUM SIGN (TYPE G)	EA	0
0668-6096	PREFAB PAV MRK TY C (W) (BIKE SYMBOL)	EA	0
0678-6028	PV SURF PREPFOR MRK (BIKE SYMBOL)	EA	0
0668-6094	PREFAB PAV MRK TY C (W) (BIKE ARROW)	EA	0
0678-6026	PV SURF PREPFOR MRK (BIKE ARROW)	EA	0
0666-6180	FLL PAV MARK TY II (W) (12")	LF	0
0678-6006	PAV SUR PREP FOR MARK (12")	LF	0
1002-6005	LANDSCAPE AMENITY (TY 4) *bike rack*	EA	0
1002-6006	LANDSCAPE AMENITY (TY 5) *trail map*	EA	0

DRAWING LEGEND:

3 — DETAIL REFERENCE

STATE OF TEXAS
MICHAEL P. MAUER
1510
REGISTERED LANDSCAPE ARCHITECT
April 6, 2021

FLATIRON/DRAGADOS LLC

M2L Associates Inc.
Houston, Texas 77024
T: 713-722-8897 F: 713-722-8048
Landscape Architecture · Land Planning · Urban Design

Texas Department of Transportation ® 2016

US 181 HARBOR BRIDGE

LAYOUT PLAN

US 181
(STA 1024+00 -1016+80)

SHEET 12 OF 12

DESIGN	FED.RD. DIV.NO.	FEDERAL AID PROJECT NO.		HIGHWAY NO.
GRAPHICS	X	(See Title Sheet)		
	STATE	DISTRICT	COUNTY	SHEET NO.
CHECK	TEXAS	CRP	NUECES	B112
CHECK	CONTROL	SECTION	JOB	
	0101	06	095	55

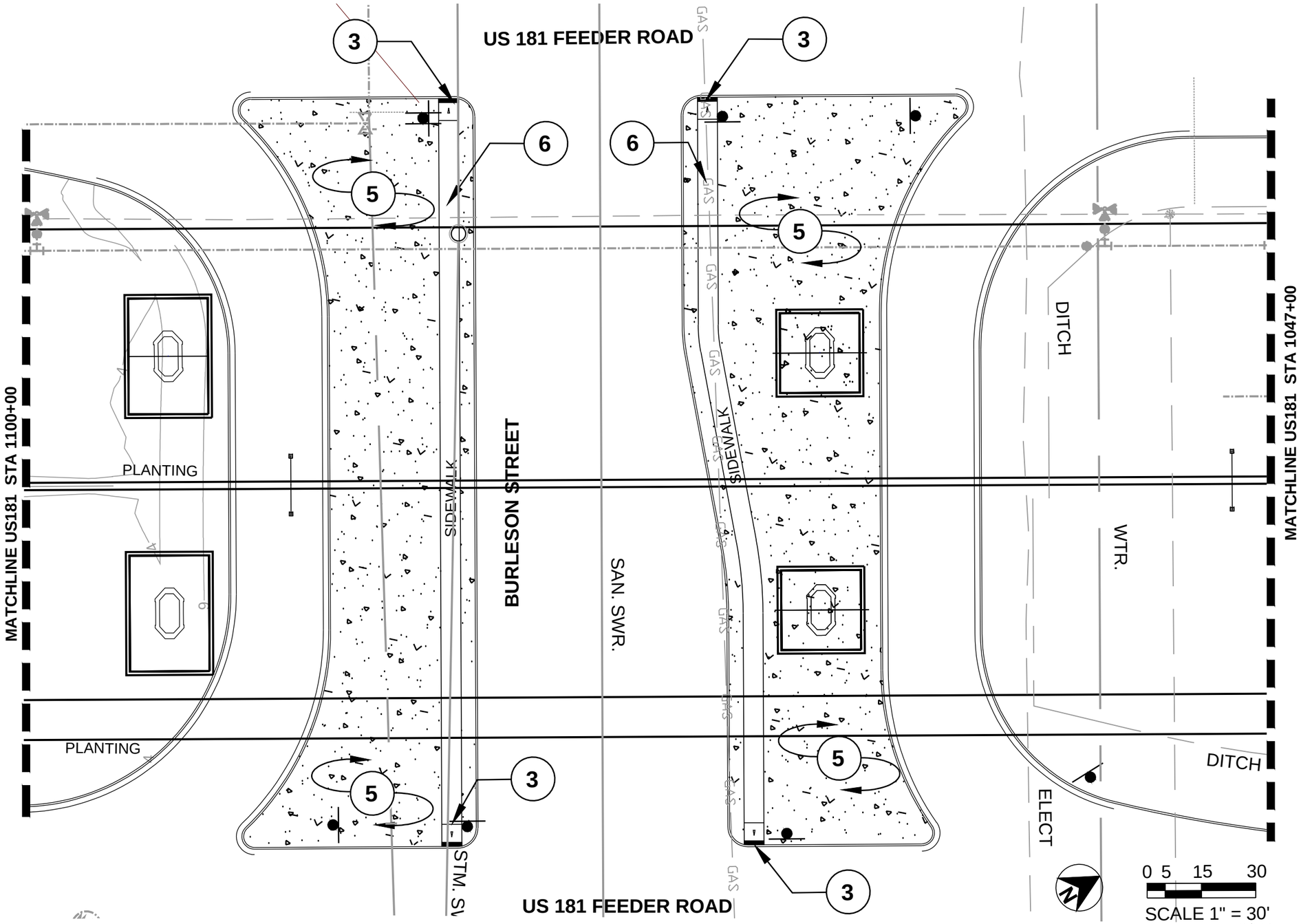

DRAWING LEGEND:

CONCRETE RIP RAP, SEE CIVIL DRAWINGS

DETAIL NOTES:

1. PARKING LOT, **SEE SITE CIVIL DRAWINGS**
2. BRIDGE STRUCTURE , **SEE STRUCTURAL DRAWINGS**
3. ACCESS RAMP, **SEE CIVIL DRAWINGS**
4. TRAIL HEAD ENTRANCE, **SEE DETAIL #5, SHEET LD105, CONSTRUCTION DETAILS 5 OF 1**
5. CONCRETE RIP-RAP, **SEE CIVIL DRAWINGS**
6. SIDEWALK, **SEE CIVIL DRAWINGS**
7. CONCRETE CURB (LANDSCAPE) 0528-6033

GENERAL NOTES:

1. SEE LANDSCAPE GENERAL NOTES SHEET 1 OF 1 FOR ADDITIONAL INFORMATION

STATE OF TEXAS
MICHAEL P. MAUER
1510
REGISTERED LANDSCAPE ARCHITECT
April 6, 2021

FLATIRON/DRAGADOS LLC

M2L Associates Inc.
Houston, Texas 77024
T: 713-722-8897 F: 713-722-8048
Landscape Architecture • Land Planning • Urban Design

Texas Department of Transportation ® 2016

US 181 HARBOR BRIDGE

ENLARGED LAYOUT PLAN BURLESON ST.

US 181
(STA 1047+00 -1100+00)

SHEET 12 OF 12

DESIGN	FED.RD. DIV.NO.	FEDERAL AID PROJECT NO.		HIGHWAY NO.
GRAPHICS	X	(See Title Sheet)		
	STATE	DISTRICT	COUNTY	SHEET NO.
CHECK	TEXAS	CRP	NUECES	B113
CHECK	CONTROL	SECTION	JOB	
	0101	06	095	56

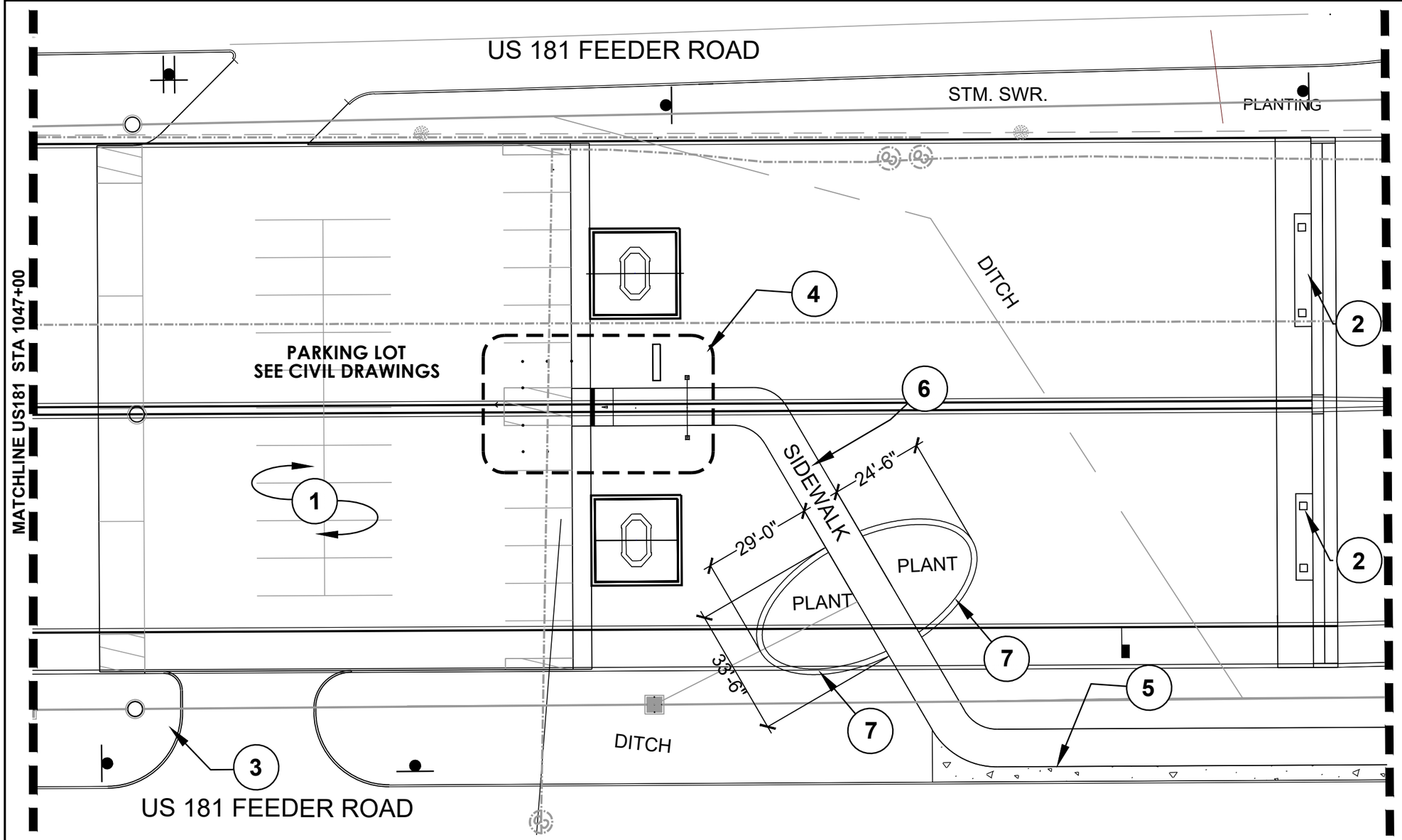

0 5 15 30
SCALE 1" = 30'

DETAIL NOTES:

1. PARKING LOT, **SEE SITE CIVIL DRAWINGS**
2. BRIDGE STRUCTURE , **SEE STRUCTURAL DRAWINGS**
3. ACCESS RAMP, **SEE CIVIL DRAWINGS**
4. TRAIL HEAD ENTRANCE, **SEE DETAIL #5, SHEET LD105, CONSTRUCTION DETAILS 5 OF 1**
5. CONCRETE RIP-RAP, **SEE CIVIL DRAWINGS**
6. SIDEWALK, **SEE CIVIL DRAWINGS**
7. CONCRETE CURB (LANDSCAPE) 0528-6033

GENERAL NOTES:

1. SEE LANDSCAPE GENERAL NOTES SHEET 1 OF 1 FOR ADDITIONAL INFORMATION

STATE OF TEXAS
MICHAEL P. MAUER
1510
REGISTERED
LANDSCAPE ARCHITECT
February 7, 2022

FLATIRON/DRAGADOS LLC

M2L Associates Inc.
Houston, Texas 77024
T: 713-722-8897 F: 713-722-8048
•Landscape Architecture•
•Land Planning• Urban Design•

Texas Department of Transportation ® 2016

US 181 HARBOR BRIDGE

ENLARGED LAYOUT PLAN NORTH BEACH PARK

US 181

(STA 1042+80 -1047+40)

SHEET 12 OF 12

DESIGN	FED.RD. DIV.NO.	FEDERAL AID PROJECT NO.		HIGHWAY NO.
GRAPHICS	X	(See Title Sheet)		
	STATE	DISTRICT	COUNTY	SHEET NO.
CHECK	TEXAS	CRP	NUECES	B114
CHECK	CONTROL	SECTION	JOB	
	0101	06	095	

MATCHLINE US181 STA 1154+60

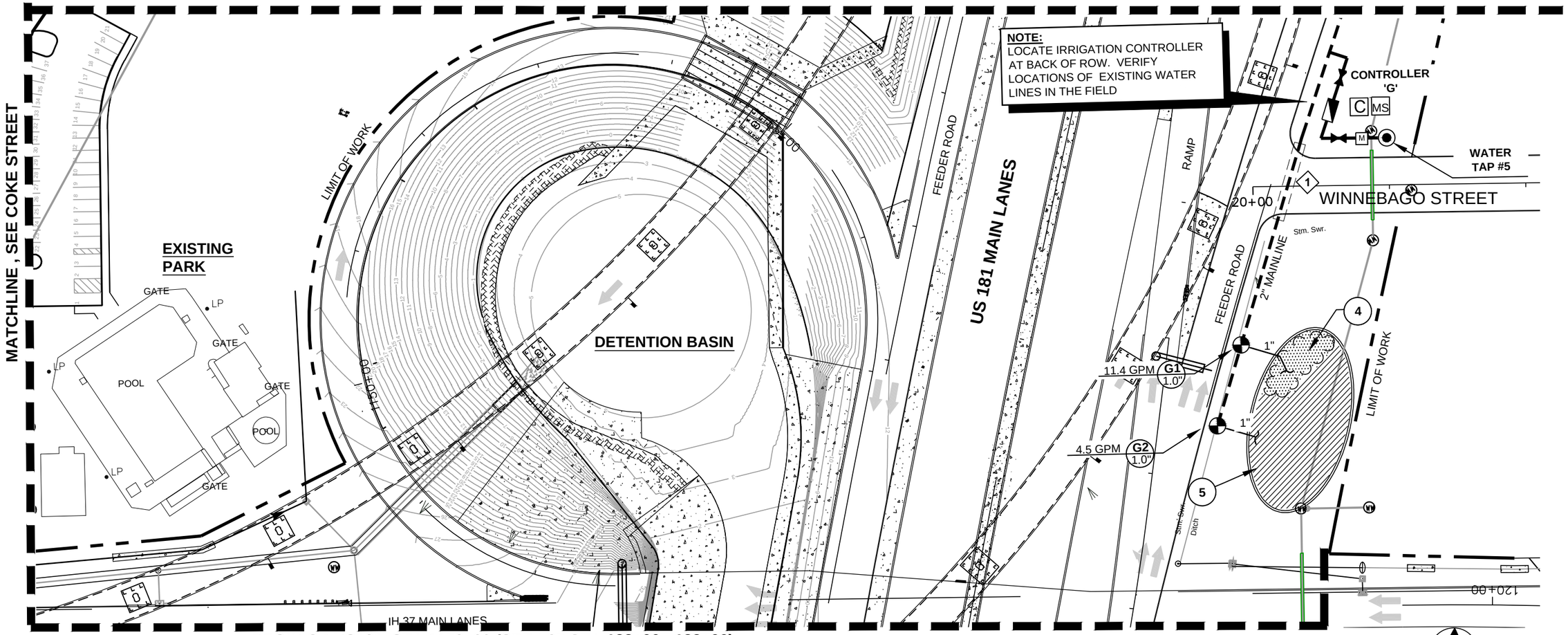

IRRIGATION CONNECTION DIAGRAM

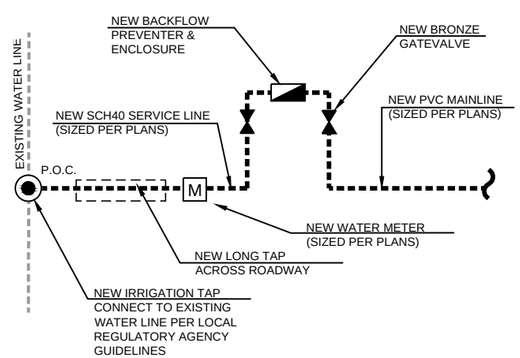

GENERAL NOTES:

1. SEE LANDSCAPE GENERAL NOTES SHEET 1 OF 1 FOR ADDITIONAL INFORMATION
2. SEE IRRIGATION DETAILS SHEETS
3. IRRIGATION SYSTEM PAID FOR UNDER 0170-6002
4. SHRUB DRIP IRRIGATION ZONE - TYPICAL
5. TREE DRIP SYSTEM - TYPICAL

IRRIGATION LEGEND

- CLASS 315 LATERAL
- SCH-40 PVC MAINLINE
- 1 6" SCH-40 PVC SLEEVE/BORE
- 2 4" SCH-40 PVC SLEEVE/BORE
- TREE DRIP SYSTEM
- SHRUB GROUND COVER DRIP SYSTEM
- HUNTER ICV SERIES VALVE(SIZE AS NOTED)
- GATE VALVE
- POINT OF CONNECTION, ***SEE DIAGRAM, THIS SHEET***
- C XC HYBRID CONTROLLER
- MS RAIN MOISTURE SENSOR
- A2 15.0 GPM 1.0" — CONTROLLER NUMBER; ZONE NUMBER; ZONE GALLONAGE PER MINUTE - ACTUAL; VALVE SIZE (INCHES)

STATE OF TEXAS
MICHAEL P. MAUER
1510
REGISTERED LANDSCAPE ARCHITECT
April 6, 2021

FLATIRON/DRAGADOS LLC

M2L Associates Inc.
Houston, Texas 77024
T: 713-722-8897 F: 713-722-8048
Landscape Architecture • Land Planning • Urban Design

Texas Department of Transportation ® 2016

US 181 HARBOR BRIDGE

IRRIGATION PLAN

US 181
(STA 1159+00 -1154+60)

SHEET 01 OF 12

DESIGN	FED.RD. DIV.NO.	FEDERAL AID PROJECT NO.		HIGHWAY NO.
GRAPHICS	X	(See Title Sheet)		
	STATE	DISTRICT	COUNTY	SHEET NO.
CHECK	TEXAS	CRP	NUECES	B201
CHECK	CONTROL	SECTION	JOB	
	0101	06	095	58

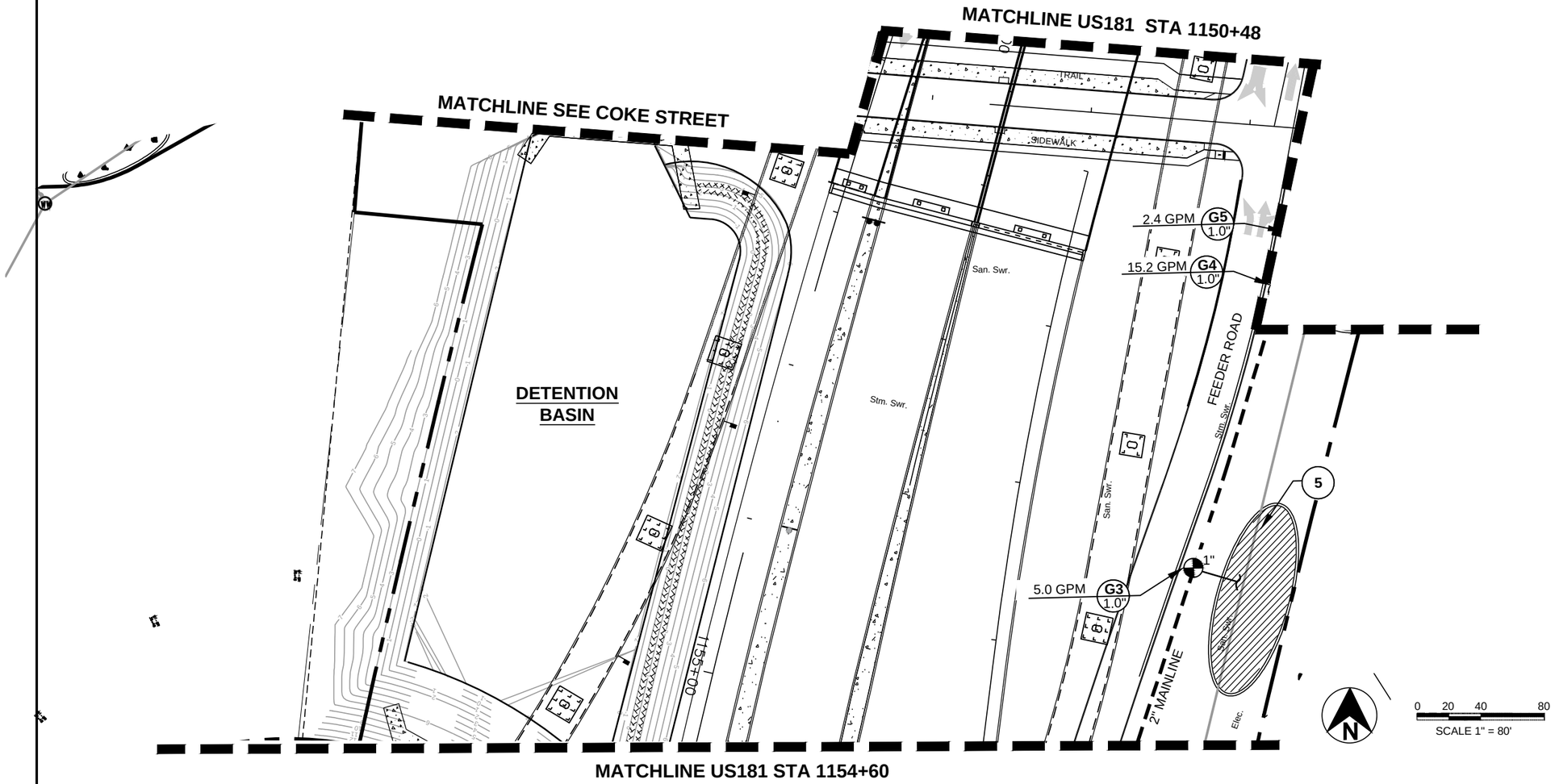

IRRIGATION CONNECTION DIAGRAM

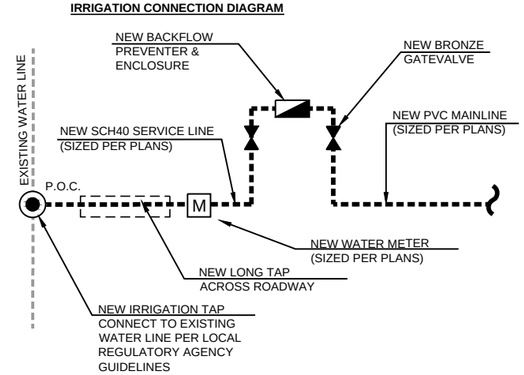

GENERAL NOTES:

1. SEE LANDSCAPE GENERAL NOTES SHEET 1 OF 1 FOR ADDITIONAL INFORMATION
2. SEE IRRIGATION DETAILS SHEETS
3. IRRIGATION SYSTEM PAID FOR UNDER 0170-6002
4. SHRUB DRIP IRRIGATION ZONE - TYPICAL
5. TREE DRIP SYSTEM - TYPICAL

IRRIGATION LEGEND

- CLASS 315 LATERAL
- SCH-40 PVC MAINLINE
- 1 6" SCH-40 PVC SLEEVE/BORE
- 2 4" SCH-40 PVC SLEEVE/BORE
- TREE DRIP SYSTEM
- SHRUB GROUND COVER DRIP SYSTEM
- HUNTER ICV SERIES VALVE(SIZE AS NOTED)
- GATE VALVE
- POINT OF CONNECTION, ***SEE DIAGRAM, THIS SHEET***
- C XC HYBRID CONTROLLER
- MS RAIN MOISTURE SENSOR
- A2 15.0 GPM 1.0" — CONTROLLER NUMBER; ZONE NUMBER; ZONE GALLONAGE PER MINUTE - ACTUAL; VALVE SIZE (INCHES)

STATE OF TEXAS
MICHAEL P. MAUER
1510
REGISTERED LANDSCAPE ARCHITECT
April 6, 2021

FLATIRON/DRAGADOS LLC

M2L Associates Inc.
Houston, Texas 77024
T: 713-722-8897 F: 713-722-8048
Landscape Architecture • Land Planning • Urban Design

Texas Department of Transportation ©2016

US 181 HARBOR BRIDGE

IRRIGATION PLAN

US 181
(STA 1150+48 -1154+60)

SHEET 02 OF 12

DESIGN	FED.RD. DIV.NO.	FEDERAL AID PROJECT NO.		HIGHWAY NO.
GRAPHICS	X	(See Title Sheet)		
	STATE	DISTRICT	COUNTY	SHEET NO.
CHECK	TEXAS	CRP	NUECES	B202
CHECK	CONTROL	SECTION	JOB	
	0101	06	095	59

GENERAL NOTES:

1. SEE LANDSCAPE GENERAL NOTES SHEET 1 OF 1 FOR ADDITIONAL INFORMATION
2. SEE IRRIGATION DETAILS SHEETS
3. IRRIGATION SYSTEM PAID FOR UNDER 0170-6002
4. SHRUB DRIP IRRIGATION ZONE - TYPICAL
5. TREE DRIP SYSTEM - TYPICAL

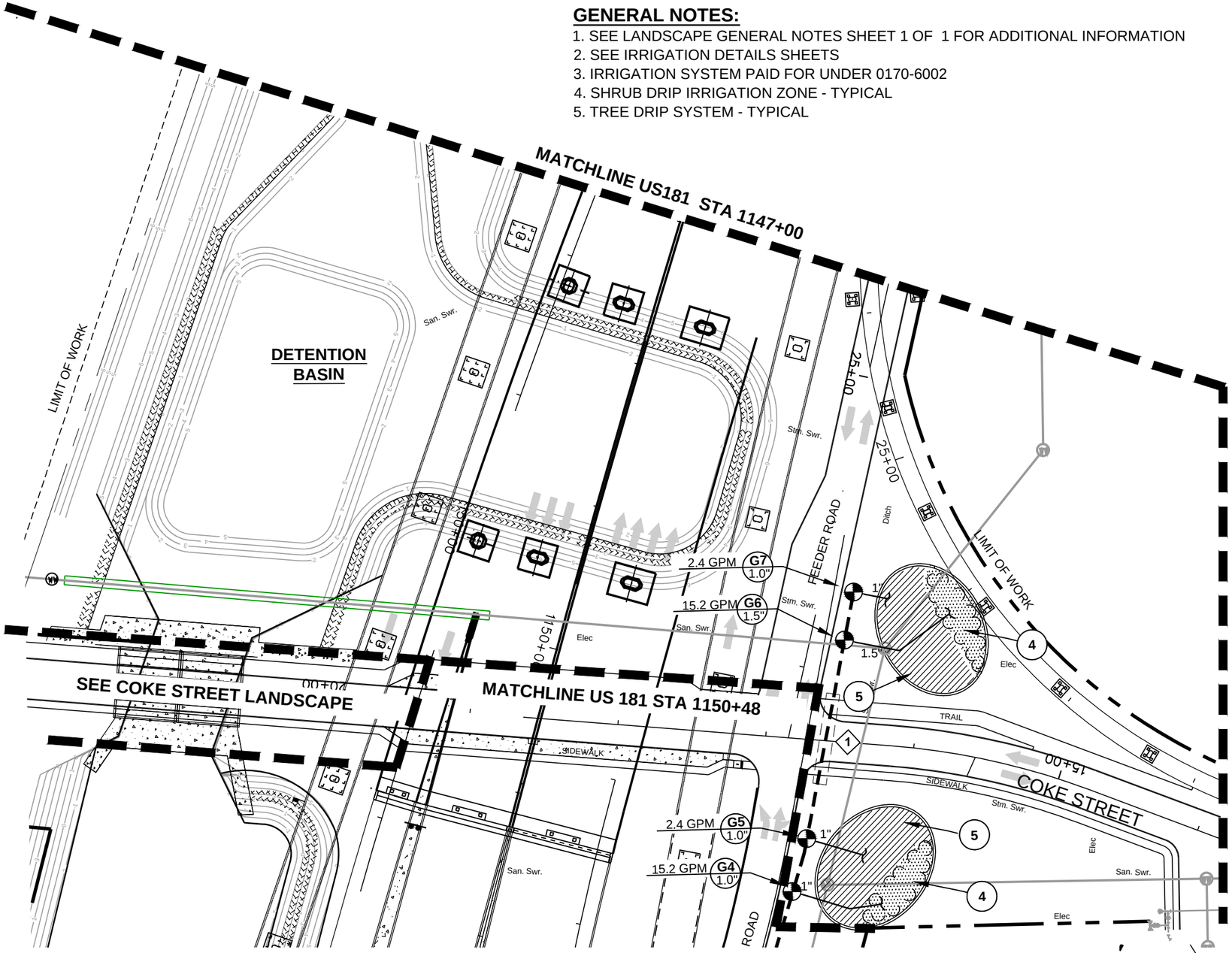

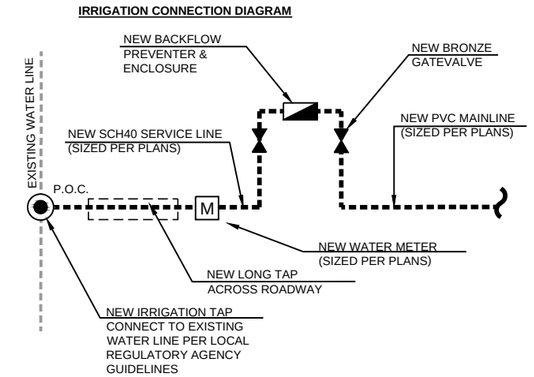

0 20 40 80

SCALE 1" = 80'

IRRIGATION LEGEND

- CLASS 315 LATERAL
- SCH-40 PVC MAINLINE
- 1 — 6" SCH-40 PVC SLEEVE/BORE
- 2 — 4" SCH-40 PVC SLEEVE/BORE
- TREE DRIP SYSTEM
- SHRUB GROUND COVER DRIP SYSTEM
- HUNTER ICV SERIES VALVE(SIZE AS NOTED)
- GATE VALVE
- POINT OF CONNECTION, ***SEE DIAGRAM, THIS SHEET***
- C — XC HYBRID CONTROLLER
- MS — RAIN MOISTURE SENSOR
- A2 — CONTROLLER NUMBER
- 15.0 GPM — ZONE GALLONAGE PER MINUTE - ACTUAL
- 1.0" — VALVE SIZE (INCHES)
- ZONE NUMBER

STATE OF TEXAS
MICHAEL P. MAUER
1510
REGISTERED LANDSCAPE ARCHITECT
April 6, 2021

FLATIRON/DRAGADOS LLC

M2L Associates Inc.
Houston, Texas 77024
T: 713-722-8897 F: 713-722-8048
Landscape Architecture • Land Planning • Urban Design

Texas Department of Transportation ® 2016

US 181 HARBOR BRIDGE

IRRIGATION PLAN

US 181
(STA 1147+00 -1154+48)

SHEET 03 OF 12

DESIGN	FED.RD. DIV.NO.	FEDERAL AID PROJECT NO.		HIGHWAY NO.
GRAPHICS	X	(See Title Sheet)		
	STATE	DISTRICT	COUNTY	SHEET NO.
CHECK	TEXAS	CRP	NUECES	B203
CHECK	CONTROL	SECTION	JOB	60
	0101	06	095	

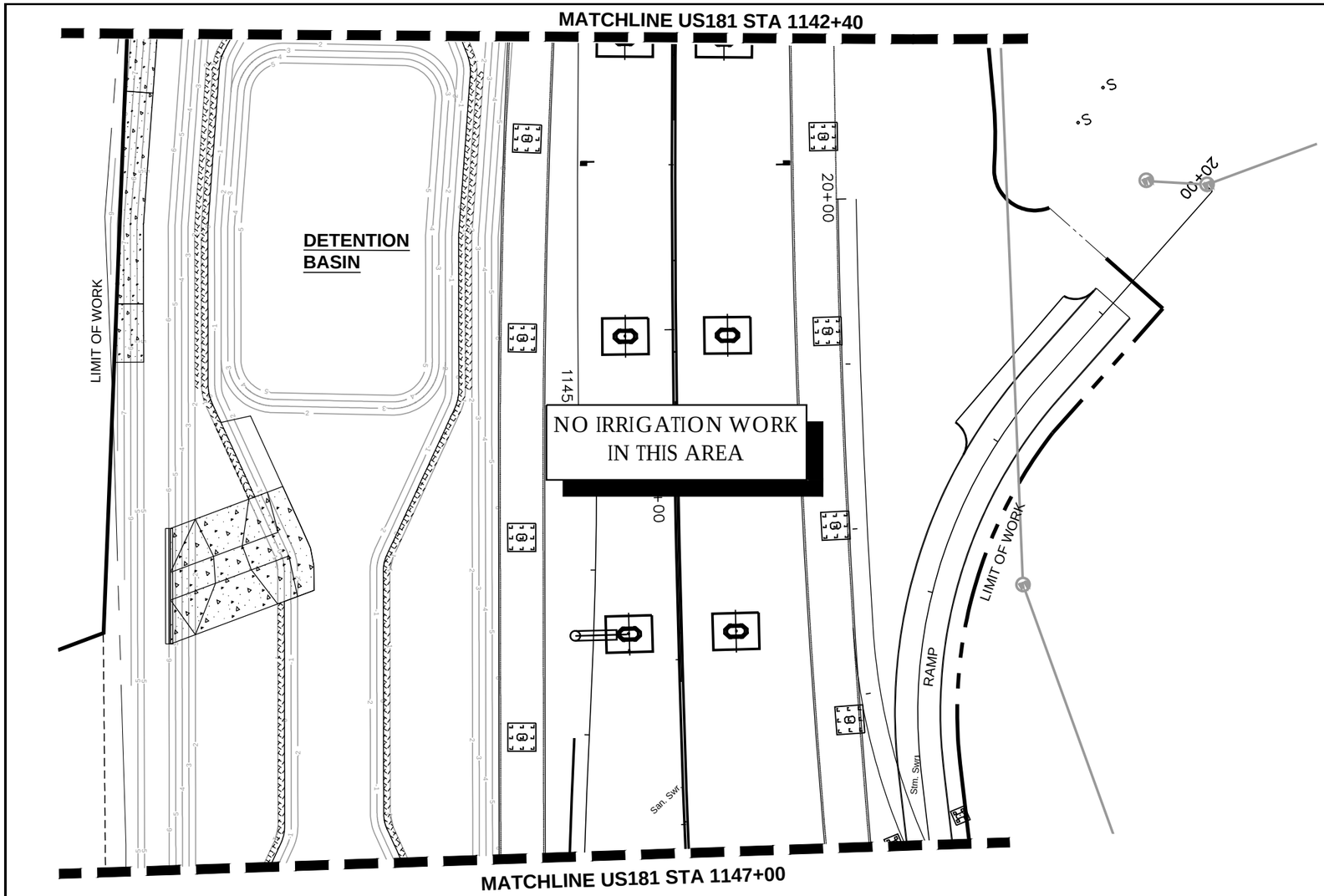

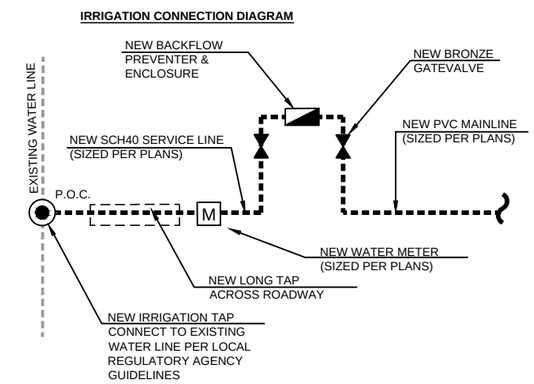

N

0 20 40 80

SCALE 1" = 80'

GENERAL NOTES:

1. SEE LANDSCAPE GENERAL NOTES SHEET 1 OF 1 FOR ADDITIONAL INFORMATION
2. SEE IRRIGATION DETAILS SHEETS
3. IRRIGATION SYSTEM PAID FOR UNDER 0170-6002
4. SHRUB DRIP IRRIGATION ZONE - TYPICAL
5. TREE DRIP SYSTEM - TYPICAL

IRRIGATION LEGEND

- CLASS 315 LATERAL
- SCH-40 PVC MAINLINE
- 1 6" SCH-40 PVC SLEEVE/BORE
- 2 4" SCH-40 PVC SLEEVE/BORE
- TREE DRIP SYSTEM
- SHRUB GROUND COVER DRIP SYSTEM
- HUNTER ICV SERIES VALVE(SIZE AS NOTED)
- GATE VALVE
- POINT OF CONNECTION, ***SEE DIAGRAM, THIS SHEET***
- C XC HYBRID CONTROLLER
- MS RAIN MOISTURE SENSOR

A2 / 1.0" — 15.0 GPM

- CONTROLLER NUMBER
- ZONE NUMBER
- ZONE GALLONAGE PER MINUTE - ACTUAL
- VALVE SIZE (INCHES)

STATE OF TEXAS
MICHAEL P. MAUER
1510
REGISTERED LANDSCAPE ARCHITECT
April 6, 2021

FLATIRON/DRAGADOS LLC

M2L Associates Inc.
Houston, Texas 77024
T: 713-722-8897 F: 713-722-8048
Landscape Architecture • Land Planning • Urban Design

Texas Department of Transportation ® 2016

US 181 HARBOR BRIDGE

IRRIGATION PLAN

US 181
(STA 1142+40 -1147+00)

SHEET 04 OF 12

DESIGN	FED.RD. DIV.NO.	FEDERAL AID PROJECT NO.		HIGHWAY NO.
GRAPHICS	X	(See Title Sheet)		
	STATE	DISTRICT	COUNTY	SHEET NO.
CHECK	TEXAS	CRP	NUECES	B204
CHECK	CONTROL	SECTION	JOB	61
	0101	06	095	

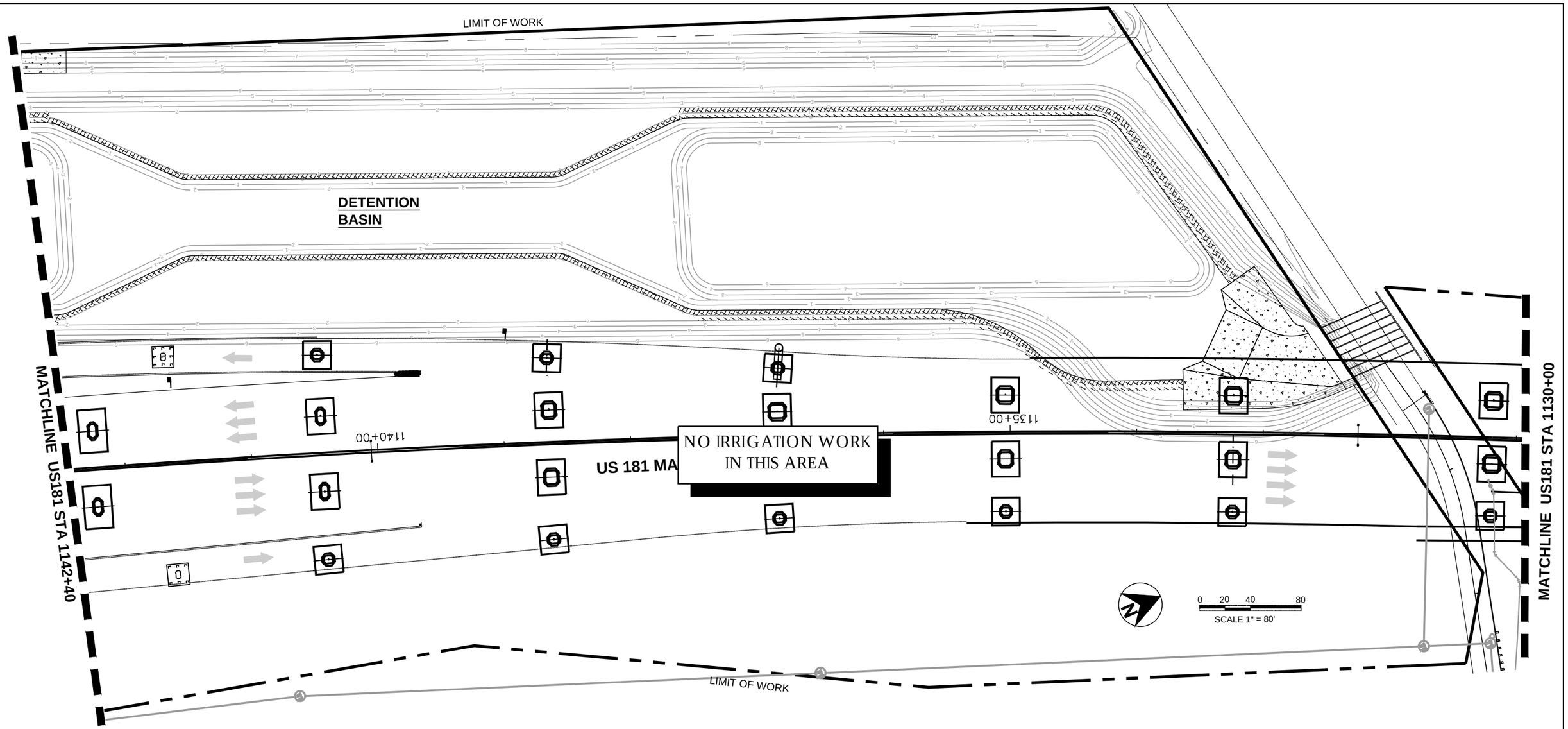

IRRIGATION CONNECTION DIAGRAM

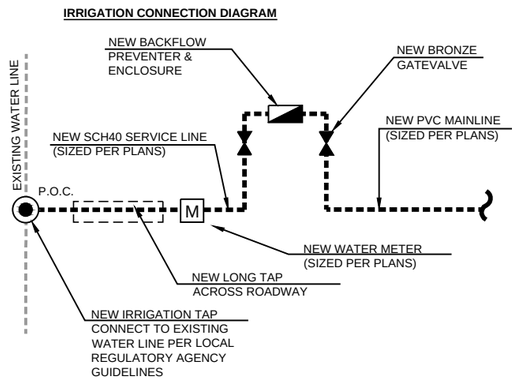

GENERAL NOTES:

1. SEE LANDSCAPE GENERAL NOTES SHEET 1 OF 1 FOR ADDITIONAL INFORMATION
2. SEE IRRIGATION DETAILS SHEETS
3. IRRIGATION SYSTEM PAID FOR UNDER 0170-6002
4. SHRUB DRIP IRRIGATION ZONE - TYPICAL
5. TREE DRIP SYSTEM - TYPICAL

IRRIGATION LEGEND

- CLASS 315 LATERAL
- SCH-40 PVC MAINLINE
- 1 — 6" SCH-40 PVC SLEEVE/BORE
- 2 — 4" SCH-40 PVC SLEEVE/BORE
- TREE DRIP SYSTEM
- SHRUB GROUND COVER DRIP SYSTEM
- HUNTER ICV SERIES VALVE(SIZE AS NOTED)
- GATE VALVE
- POINT OF CONNECTION, ***SEE DIAGRAM, THIS SHEET***
- C — XC HYBRID CONTROLLER
- MS — RAIN MOISTURE SENSOR
- A2 — CONTROLLER NUMBER; ZONE NUMBER
- 15.0 GPM — ZONE GALLONAGE PER MINUTE - ACTUAL
- 1.0" — VALVE SIZE (INCHES)

STATE OF TEXAS
MICHAEL P. MAUER
1510
REGISTERED LANDSCAPE ARCHITECT
April 6, 2021

FLATIRON/DRAGADOS LLC

M2L Associates Inc.
Houston, Texas 77024
T: 713-722-8897 F: 713-722-8048
Landscape Architecture • Land Planning • Urban Design

Texas Department of Transportation ® 2016

US 181 HARBOR BRIDGE

IRRIGATION PLAN

US 181
(STA 1142+40 -1130+00)

SHEET 05 OF 12

DESIGN	FED.RD. DIV.NO.	FEDERAL AID PROJECT NO.		HIGHWAY NO.
GRAPHICS	X	(See Title Sheet)		
	STATE	DISTRICT	COUNTY	SHEET NO.
CHECK	TEXAS	CRP	NUECES	B205
CHECK	CONTROL	SECTION	JOB	
	0101	06	095	62

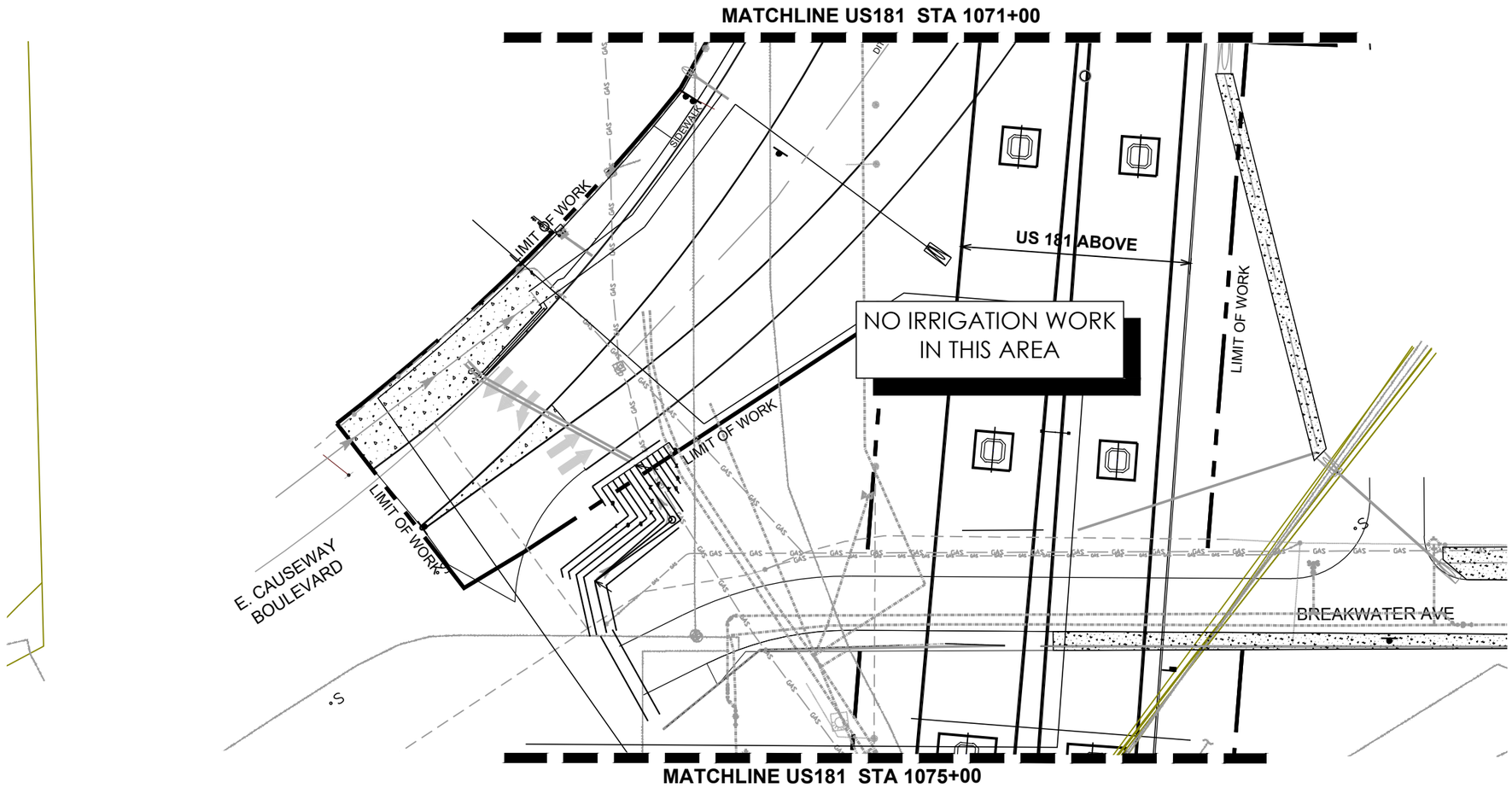

0 20 40 80
SCALE 1" = 80'

GENERAL NOTES:

1. SEE LANDSCAPE GENERAL NOTES SHEET 1 OF 1 FOR ADDITIONAL INFORMATION
2. SEE IRRIGATION DETAILS SHEETS
3. IRRIGATION SYSTEM PAID FOR UNDER 0170-6002
4. SHRUB DRIP IRRIGATION ZONE 0 TYPICAL
5. TREE DRIP SYSTEM - TYPICAL

IRRIGATION CONNECTION DIAGRAM

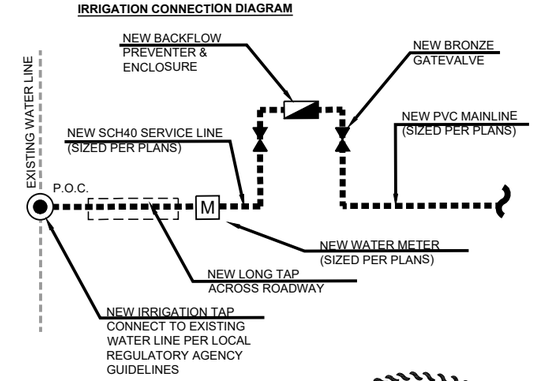

IRRIGATION LEGEND

- CLASS 315 LATERAL
- SCH-40 PVC MAINLINE
- 1 — 6" SCH-40 PVC SLEEVE/BORE
- 2 — 4" SCH-40 PVC SLEEVE/BORE
- TREE DRIP SYSTEM
- SHRUB GROUND COVER DRIP SYSTEM
- HUNTER ICV SERIES VALVE(SIZE AS NOTED)
- GATE VALVE
- POINT OF CONNECTION, ***SEE DIAGRAM, THIS SHEET***
- C — XC HYBRID CONTROLLER
- MS — RAIN MOISTURE SENSOR

A2 — CONTROLLER NUMBER
15.0 GPM — ZONE GALLONAGE PER MINUTE - ACTUAL
1.0" — VALVE SIZE (INCHES)
ZONE NUMBER

STATE OF TEXAS
MICHAEL P. MAUER
1510
REGISTERED LANDSCAPE ARCHITECT
February 7, 2022

FLATIRON/DRAGADOS LLC

M2L Associates Inc.
Houston, Texas 77024
T: 713-722-8897 F: 713-722-8048
•Landscape Architecture•
•Land Planning• Urban Design•

Texas Department of Transportation ©2016

US 181 HARBOR BRIDGE

IRRIGATION PLAN

US 181
(STA 1075+00 -1071+00)

SHEET 06 OF 12

DESIGN	FED.RD. DIV.NO.	FEDERAL AID PROJECT NO.		HIGHWAY NO.
GRAPHICS	X	(See Title Sheet)		
	STATE	DISTRICT	COUNTY	SHEET NO.
CHECK	TEXAS	CRP	NUECES	B206
CHECK	CONTROL	SECTION	JOB	
	0101	06	095	63

MATCHLINE US181 STA 1071+00

MATCHLINE US181 STA 1061+00

ELEC

DITCH

SIDEWALK

LIMIT OF WORK

SIDEWALK

PRIVATE DRIVE

FEEDER ROAD

STM SWR

WTR

NO IRRIGATION WORK IN THIS AREA

US 181 MAIN LANES

US 181 ABOVE

STM SWR

FEEDER ROAD

LIMIT OF WORK

BRIDGEPORT AVE

0 20 40 80

SCALE 1" = 80'

GENERAL NOTES:

1. SEE LANDSCAPE GENERAL NOTES SHEET 1 OF 1 FOR ADDITIONAL INFORMATION
2. SEE IRRIGATION DETAILS SHEETS
3. IRRIGATION SYSTEM PAID FOR UNDER 0170-6002
4. SHRUB DRIP IRRIGATION ZONE 0 TYPICAL
5. TREE DRIP SYSTEM - TYPICAL

IRRIGATION CONNECTION DIAGRAM

EXISTING WATER LINE

NEW BACKFLOW PREVENTER & ENCLOSURE

NEW BRONZE GATEVALVE

NEW SCH40 SERVICE LINE (SIZED PER PLANS)

NEW PVC MAINLINE (SIZED PER PLANS)

P.O.C.

M

NEW WATER METER (SIZED PER PLANS)

NEW LONG TAP ACROSS ROADWAY

NEW IRRIGATION TAP CONNECT TO EXISTING WATER LINE PER LOCAL REGULATORY AGENCY GUIDELINES

IRRIGATION LEGEND

- CLASS 315 LATERAL
- SCH-40 PVC MAINLINE
- 1 6" SCH-40 PVC SLEEVE/BORE
- 2 4" SCH-40 PVC SLEEVE/BORE
- TREE DRIP SYSTEM
- SHRUB GROUND COVER DRIP SYSTEM
- HUNTER ICV SERIES VALVE(SIZE AS NOTED)
- GATE VALVE
- POINT OF CONNECTION, ***SEE DIAGRAM, THIS SHEET***
- C XC HYBRID CONTROLLER
- MS RAIN MOISTURE SENSOR

A2 15.0 GPM 1.0"

- CONTROLLER NUMBER
- ZONE NUMBER
- ZONE GALLONAGE PER MINUTE - ACTUAL
- VALVE SIZE (INCHES)

STATE OF TEXAS
MICHAEL P. MAUER
1510
REGISTERED LANDSCAPE ARCHITECT
February 7, 2022

FLATIRON/DRAGADOS LLC

M2L Associates Inc.
Houston, Texas 77024
T: 713-722-8897 F: 713-722-8048
•Landscape Architecture•
•Land Planning• Urban Design•

Texas Department of Transportation ® 2016

US 181 HARBOR BRIDGE

IRRIGATION PLAN

US 181
(STA 1071+00 -1061+00)

SHEET 07 OF 12

DESIGN	FED.RD. DIV.NO.	FEDERAL AID PROJECT NO.		HIGHWAY NO.
GRAPHICS	X	(See Title Sheet)		
	STATE	DISTRICT	COUNTY	SHEET NO.
CHECK	TEXAS	CRP	NUECES	B207
CHECK	CONTROL	SECTION	JOB	
	0101	06	095	64

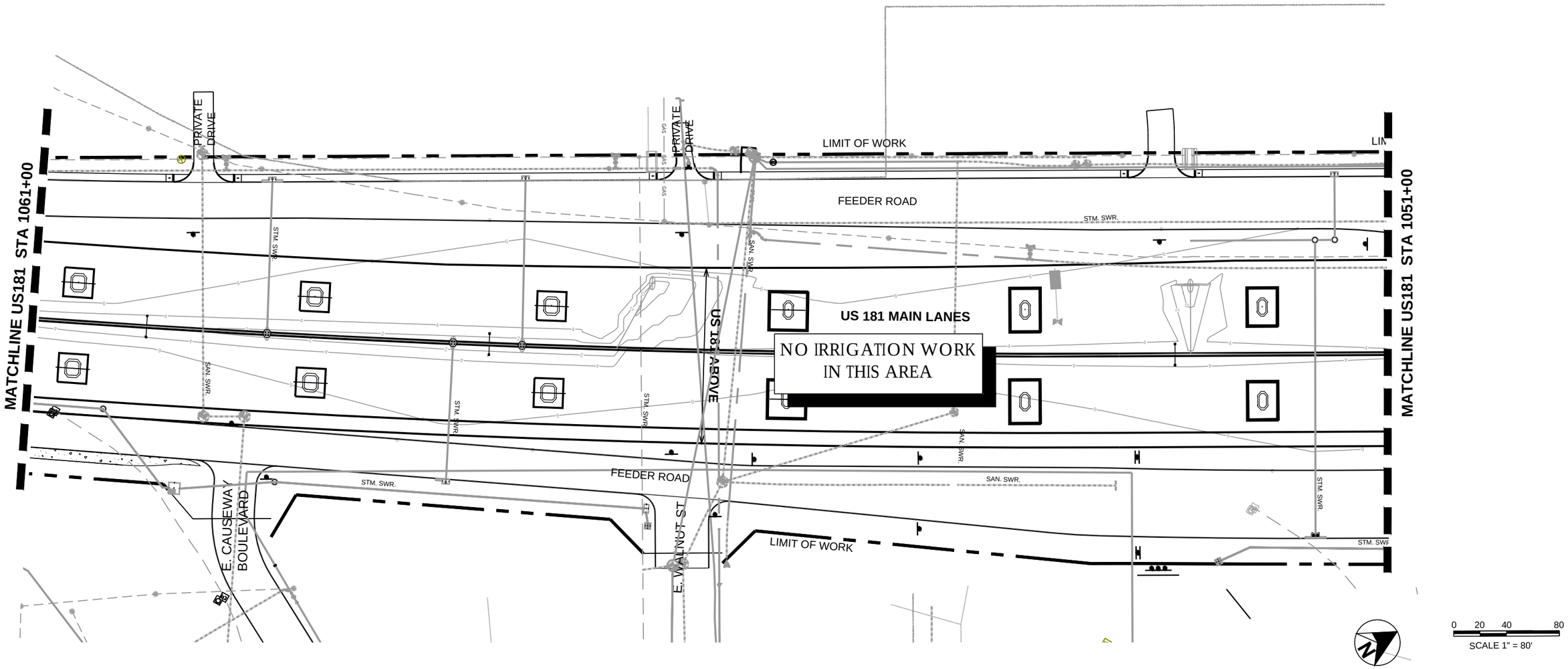

GENERAL NOTES:

1. SEE LANDSCAPE GENERAL NOTES SHEET 1 OF 1 FOR ADDITIONAL INFORMATION
2. SEE IRRIGATION DETAILS SHEETS
3. IRRIGATION SYSTEM PAID FOR UNDER 0170-6002
4. SHRUB DRIP IRRIGATION ZONE 0 TYPICAL
5. TREE DRIP SYSTEM - TYPICAL

IRRIGATION CONNECTION DIAGRAM

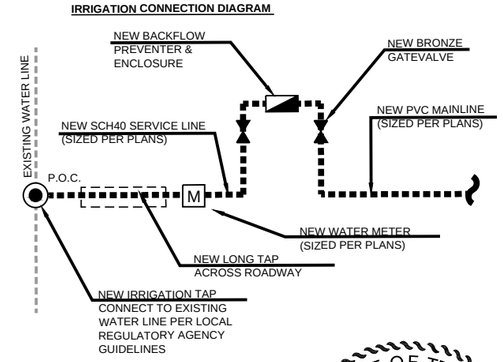

IRRIGATION LEGEND

- CLASS 315 LATERAL
- SCH-40 PVC MAINLINE
- 1 — 6" SCH-40 PVC SLEEVE/BORE
- 2 — 4" SCH-40 PVC SLEEVE/BORE
- TREE DRIP SYSTEM
- SHRUB GROUND COVER DRIP SYSTEM
- HUNTER ICV SERIES VALVE(SIZE AS NOTED)
- GATE VALVE
- POINT OF CONNECTION, ***SEE DIAGRAM, THIS SHEET***
- C — XC HYBRID CONTROLLER
- MS — RAIN MOISTURE SENSOR

A2 — CONTROLLER NUMBER
15.0 GPM — ZONE GALLONAGE PER MINUTE - ACTUAL
1.0" — VALVE SIZE (INCHES)

STATE OF TEXAS
MICHAEL P. MAUER
1510
REGISTERED LANDSCAPE ARCHITECT
April 6, 2021

FLATIRON/DRAGADOS LLC

M2L Associates Inc.
Houston, Texas 77024
T: 713-722-8897 F: 713-722-8048
Landscape Architecture • Land Planning • Urban Design

Texas Department of Transportation ® 2016

US 181 HARBOR BRIDGE

IRRIGATION PLAN

US 181
(STA 1061+00 -1051+00)

SHEET 08 OF 12

DESIGN	FED.RD. DIV.NO.	FEDERAL AID PROJECT NO.		HIGHWAY NO.
GRAPHICS	X	(See Title Sheet)		
	STATE	DISTRICT	COUNTY	SHEET NO.
CHECK	TEXAS	CRP	NUECES	B208
	CONTROL	SECTION	JOB	
CHECK	0101	06	095	65

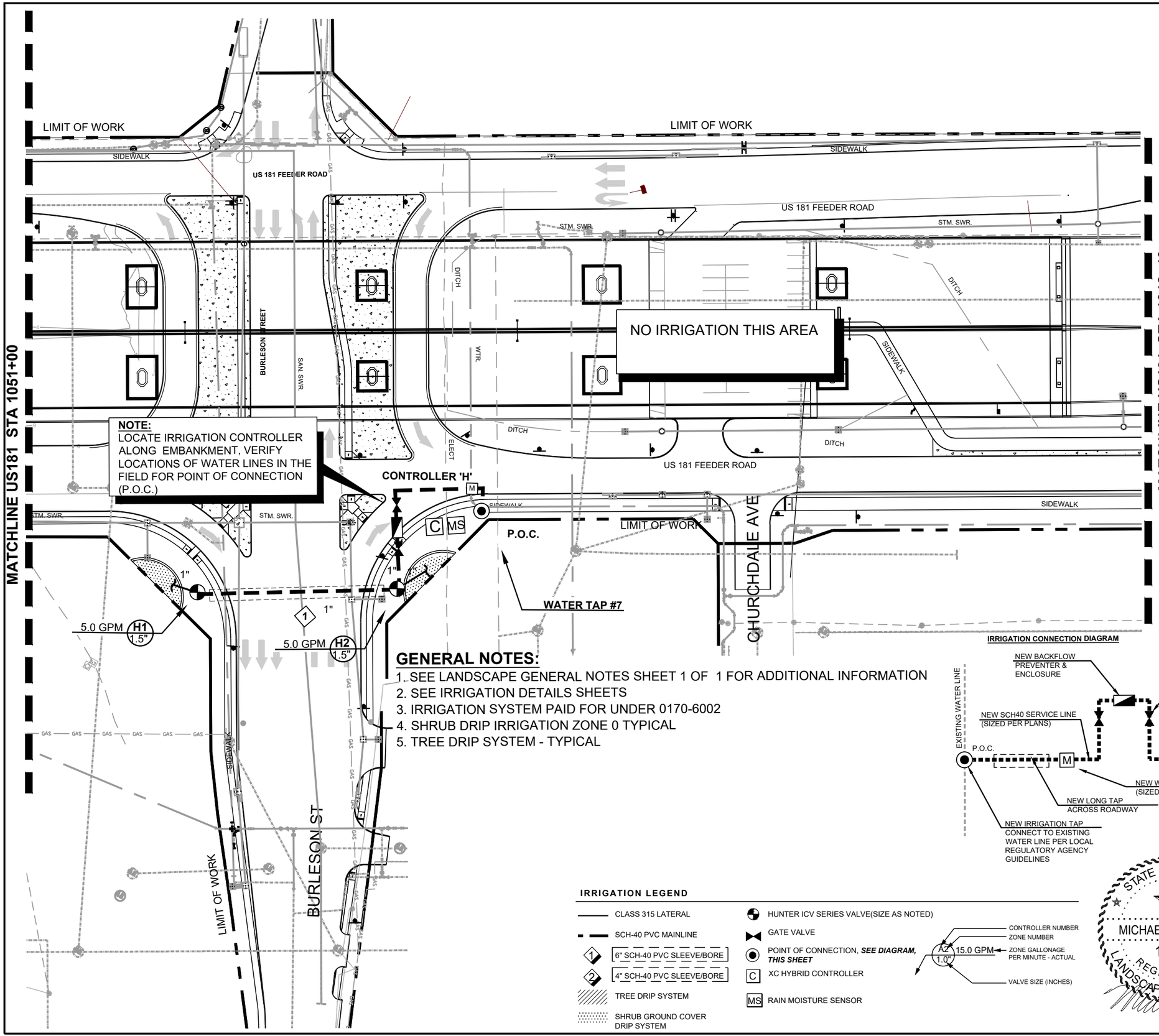

GENERAL NOTES:

1. SEE LANDSCAPE GENERAL NOTES SHEET 1 OF 1 FOR ADDITIONAL INFORMATION
2. SEE IRRIGATION DETAILS SHEETS
3. IRRIGATION SYSTEM PAID FOR UNDER 0170-6002
4. SHRUB DRIP IRRIGATION ZONE 0 TYPICAL
5. TREE DRIP SYSTEM - TYPICAL

IRRIGATION CONNECTION DIAGRAM

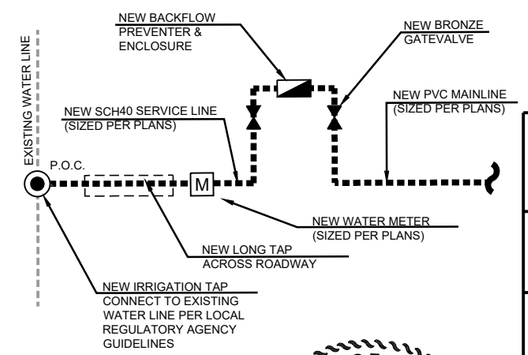

0 20 40 80
SCALE 1" = 80'

IRRIGATION LEGEND

- CLASS 315 LATERAL
- SCH-40 PVC MAINLINE
- 1 — 6" SCH-40 PVC SLEEVE/BORE
- 2 — 4" SCH-40 PVC SLEEVE/BORE
- TREE DRIP SYSTEM
- SHRUB GROUND COVER DRIP SYSTEM
- HUNTER ICV SERIES VALVE(SIZE AS NOTED)
- GATE VALVE
- POINT OF CONNECTION, ***SEE DIAGRAM, THIS SHEET***
- C — XC HYBRID CONTROLLER
- MS — RAIN MOISTURE SENSOR

A2 — CONTROLLER NUMBER
15.0 GPM — ZONE GALLONAGE PER MINUTE - ACTUAL
1.0" — VALVE SIZE (INCHES)
ZONE NUMBER

STATE OF TEXAS
MICHAEL P. MAUER
1510
REGISTERED LANDSCAPE ARCHITECT
SEP 9, 2022

FLATIRON/DRAGADOS LLC

M2L Associates Inc.
Houston, Texas 77024
T: 713-722-8897 F: 713-722-8048
•Landscape Architecture•
•Land Planning• Urban Design•

Texas Department of Transportation ©2016

US 181 HARBOR BRIDGE

IRRIGATION PLAN

US 181
(STA 1051+00 -1042+40)

SHEET 9 OF 12

DESIGN	FED.RD. DIV.NO.	FEDERAL AID PROJECT NO.		HIGHWAY NO.
GRAPHICS	X	(See Title Sheet)		
	STATE	DISTRICT	COUNTY	SHEET NO.
CHECK	TEXAS	CRP	NUECES	B209
CHECK	CONTROL	SECTION	JOB	
	0101	06	095	66

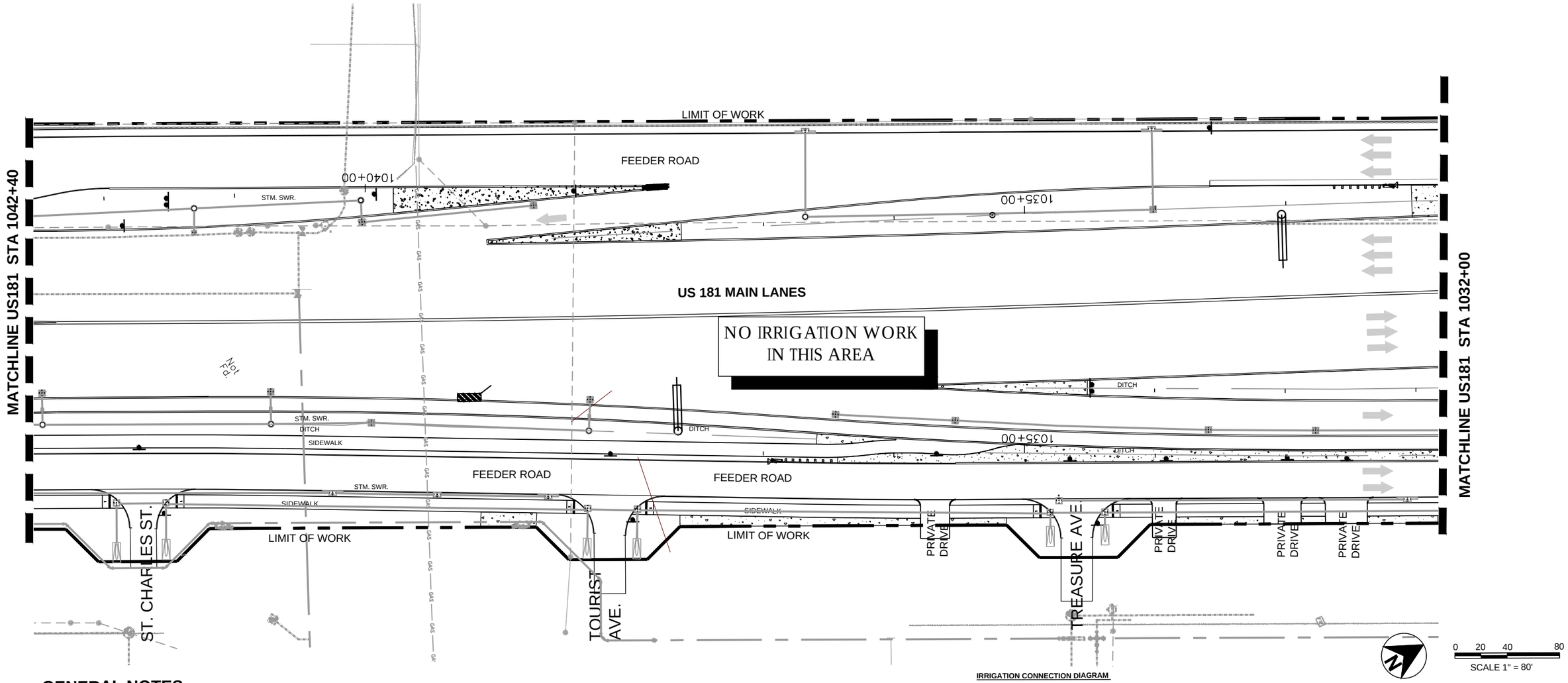

GENERAL NOTES:

1. SEE LANDSCAPE GENERAL NOTES SHEET 1 OF 1 FOR ADDITIONAL INFORMATION
2. SEE IRRIGATION DETAILS SHEETS
3. IRRIGATION SYSTEM PAID FOR UNDER 0170-6002
4. SHRUB DRIP IRRIGATION ZONE 0 TYPICAL
5. TREE DRIP SYSTEM - TYPICAL

IRRIGATION CONNECTION DIAGRAM

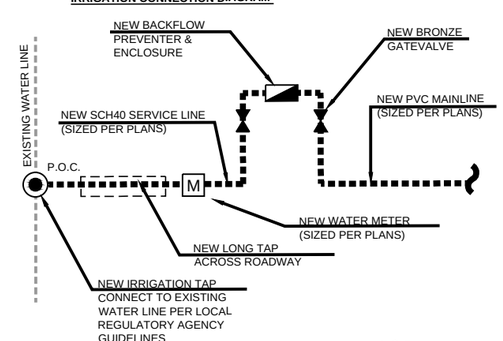

IRRIGATION LEGEND

- CLASS 315 LATERAL
- SCH-40 PVC MAINLINE
- 1 — 6" SCH-40 PVC SLEEVE/BORE
- 2 — 4" SCH-40 PVC SLEEVE/BORE
- TREE DRIP SYSTEM
- SHRUB GROUND COVER DRIP SYSTEM
- HUNTER ICV SERIES VALVE(SIZE AS NOTED)
- GATE VALVE
- POINT OF CONNECTION, ***SEE DIAGRAM, THIS SHEET***
- C — XC HYBRID CONTROLLER
- MS — RAIN MOISTURE SENSOR

A2 — CONTROLLER NUMBER
ZONE NUMBER
15.0 GPM — ZONE GALLONAGE PER MINUTE - ACTUAL
1.0" — VALVE SIZE (INCHES)

STATE OF TEXAS
MICHAEL P. MAUER
1510
REGISTERED LANDSCAPE ARCHITECT
April 6, 2021

FLATIRON/DRAGADOS LLC

M2L Associates Inc.
Houston, Texas 77024
T: 713-722-8897 F: 713-722-8048
Landscape Architecture
Land Planning Urban Design

Texas Department of Transportation ® 2016

US 181 HARBOR BRIDGE

IRRIGATION PLAN

US 181
(STA 1042+40 -1032+00)

SHEET 10 OF 12

DESIGN	FED.RD. DIV.NO.	FEDERAL AID PROJECT NO.		HIGHWAY NO.
GRAPHICS	X	(See Title Sheet)		
	STATE	DISTRICT	COUNTY	SHEET NO.
CHECK	TEXAS	CRP	NUECES	B210
CHECK	CONTROL	SECTION	JOB	
	0101	06	095	67

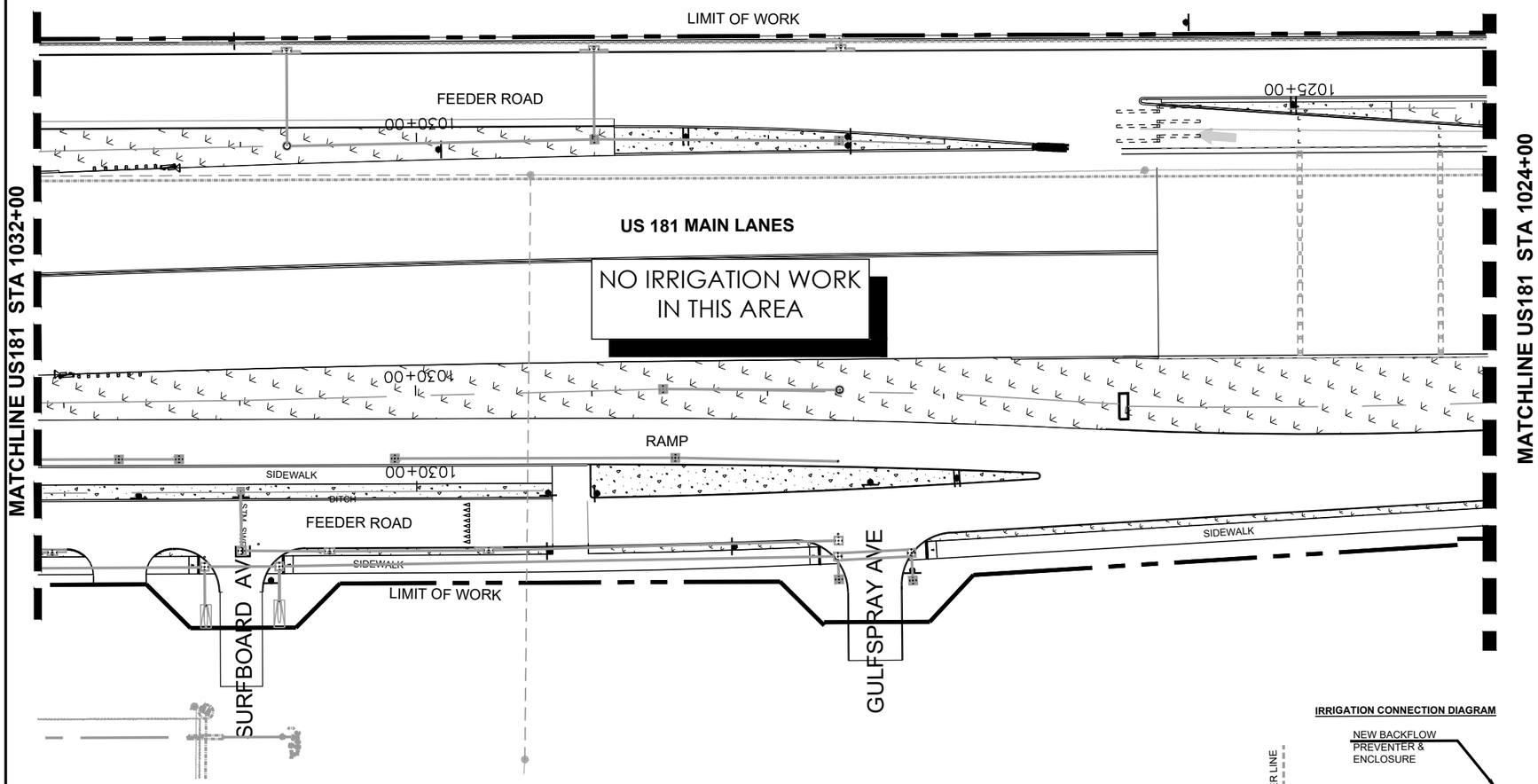

GENERAL NOTES:

1. SEE LANDSCAPE GENERAL NOTES SHEET 1 OF 1 FOR ADDITIONAL INFORMATION
2. SEE IRRIGATION DETAILS SHEETS
3. IRRIGATION SYSTEM PAID FOR UNDER 0170-6002
4. SHRUB DRIP IRRIGATION ZONE 0 TYPICAL
5. TREE DRIP SYSTEM - TYPICAL

IRRIGATION CONNECTION DIAGRAM

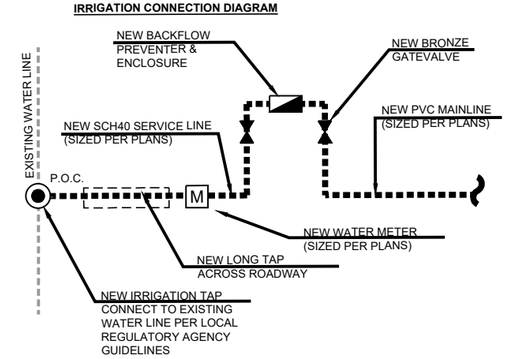

0 20 40 80
SCALE 1" = 80'

IRRIGATION LEGEND

- CLASS 315 LATERAL
- SCH-40 PVC MAINLINE
- 1 6" SCH-40 PVC SLEEVE/BORE
- 2 4" SCH-40 PVC SLEEVE/BORE
- TREE DRIP SYSTEM
- SHRUB GROUND COVER DRIP SYSTEM
- HUNTER ICV SERIES VALVE(SIZE AS NOTED)
- GATE VALVE
- POINT OF CONNECTION, ***SEE DIAGRAM, THIS SHEET***
- C XC HYBRID CONTROLLER
- MS RAIN MOISTURE SENSOR

A2 15.0 GPM 1.0"
- CONTROLLER NUMBER
- ZONE NUMBER
- ZONE GALLONAGE PER MINUTE - ACTUAL
- VALVE SIZE (INCHES)

STATE OF TEXAS
MICHAEL P. MAUER
1510
REGISTERED LANDSCAPE ARCHITECT
SEP 9, 2022

FLATIRON/DRAGADOS LLC

M2L Associates Inc.
Houston, Texas 77024
T: 713-722-8897 F: 713-722-8048
Landscape Architecture
Land Planning Urban Design

Texas Department of Transportation ® 2016

US 181 HARBOR BRIDGE

IRRIGATION PLAN

US 181
(STA 1032+00 -1024+00)

SHEET 11 OF 12

DESIGN	FED.RD. DIV.NO.	FEDERAL AID PROJECT NO.		HIGHWAY NO.
GRAPHICS	X	(See Title Sheet)		
	STATE	DISTRICT	COUNTY	SHEET NO.
CHECK	TEXAS	CRP	NUECES	B211
CHECK	CONTROL	SECTION	JOB	
	0101	06	095	68

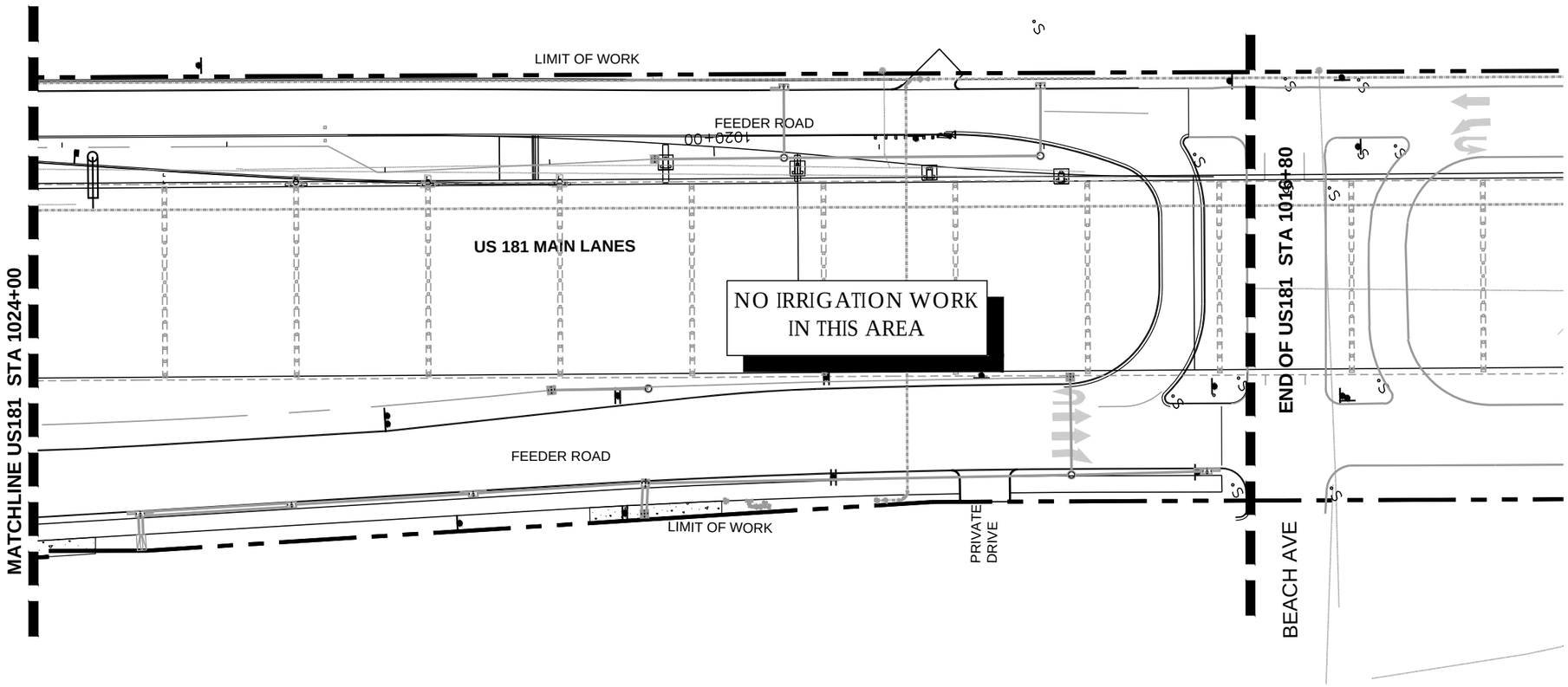

GENERAL NOTES:

1. SEE LANDSCAPE GENERAL NOTES SHEET 1 OF 1 FOR ADDITIONAL INFORMATION
2. SEE IRRIGATION DETAILS SHEETS
3. IRRIGATION SYSTEM PAID FOR UNDER 0170-6002
4. SHRUB DRIP IRRIGATION ZONE 0 TYPICAL
5. TREE DRIP SYSTEM - TYPICAL

IRRIGATION CONNECTION DIAGRAM

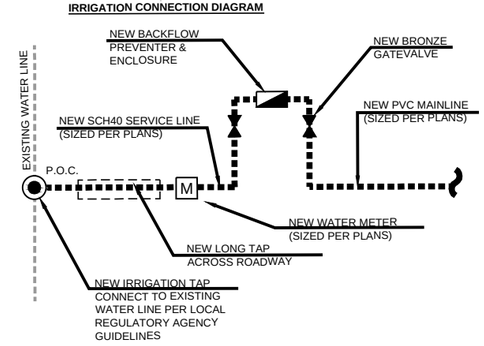

0 20 40 80
SCALE 1" = 80'

IRRIGATION LEGEND

- CLASS 315 LATERAL
- SCH-40 PVC MAINLINE
- 1 6" SCH-40 PVC SLEEVE/BORE
- 2 4" SCH-40 PVC SLEEVE/BORE
- TREE DRIP SYSTEM
- SHRUB GROUND COVER DRIP SYSTEM
- HUNTER ICV SERIES VALVE(SIZE AS NOTED)
- GATE VALVE
- POINT OF CONNECTION, ***SEE DIAGRAM, THIS SHEET***
- C XC HYBRID CONTROLLER
- MS RAIN MOISTURE SENSOR

A2 15.0 GPM
1.0"

- CONTROLLER NUMBER
- ZONE NUMBER
- ZONE GALLONAGE PER MINUTE - ACTUAL
- VALVE SIZE (INCHES)

STATE OF TEXAS
MICHAEL P. MAUER
1510
REGISTERED
LANDSCAPE ARCHITECT
April 6, 2021

FLATIRON/DRAGADOS LLC

M2L Associates Inc.
Houston, Texas 77024
T: 713-722-8897 F: 713-722-8048
Landscape Architecture
Land Planning Urban Design

Texas Department of Transportation ® 2016

US 181 HARBOR BRIDGE

IRRIGATION PLAN

US 181
(STA 1024+00 -1016+80)

SHEET 12 OF 12

DESIGN	FED.RD. DIV.NO.	FEDERAL AID PROJECT NO.		HIGHWAY NO.
GRAPHICS	X	(See Title Sheet)		
	STATE	DISTRICT	COUNTY	SHEET NO.
CHECK	TEXAS	CRP	NUECES	B212
CHECK	CONTROL	SECTION	JOB	
	0101	06	095	69

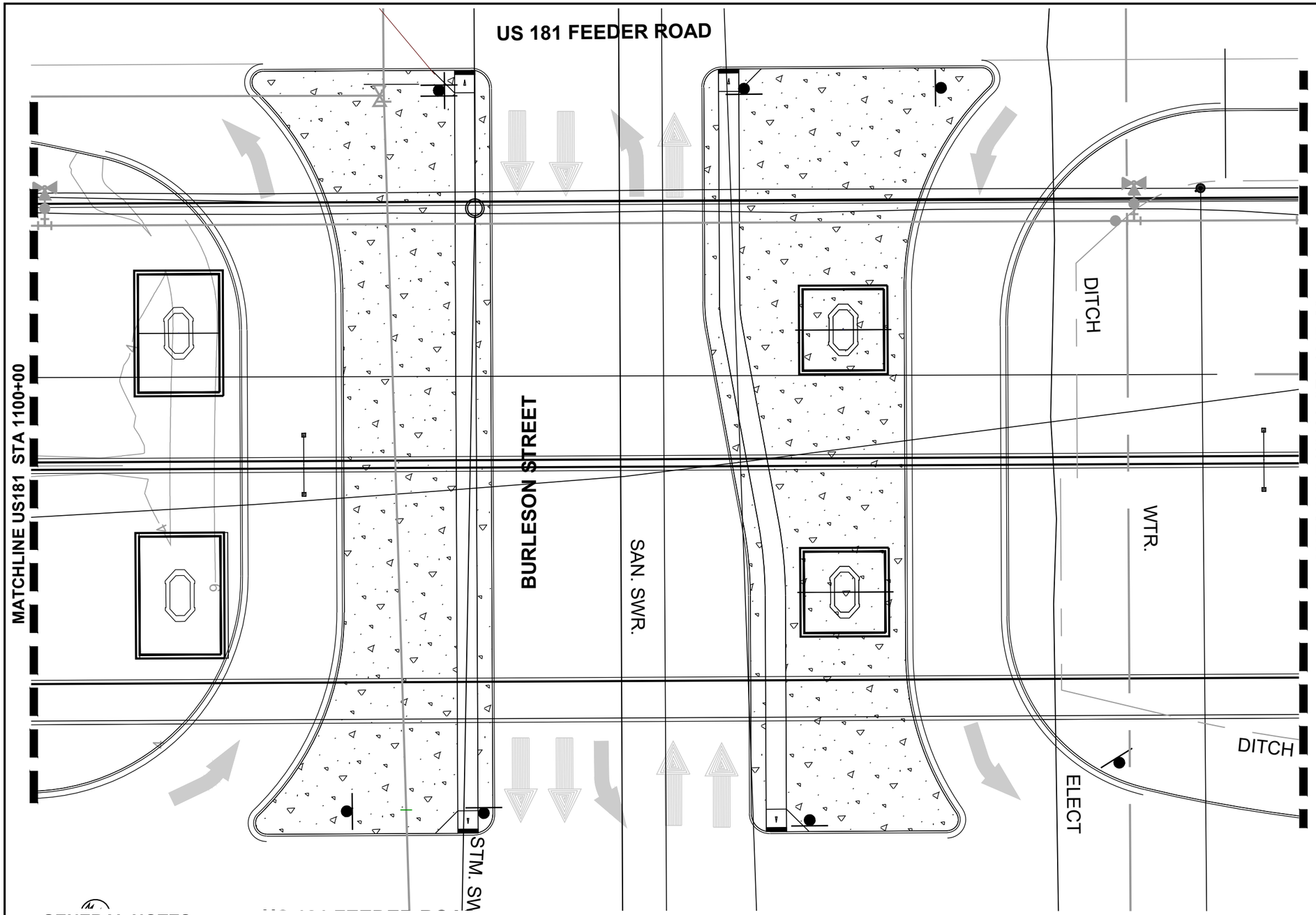

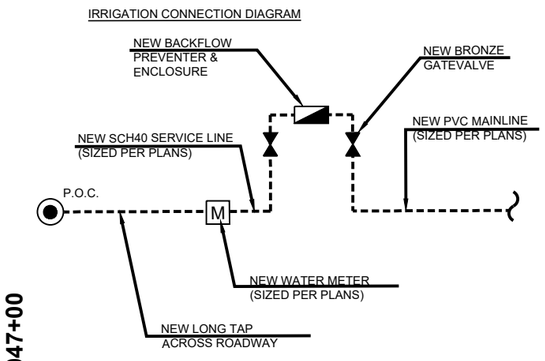

0 5 15 30
SCALE 1" = 30'

GENERAL NOTES:

1. SEE LANDSCAPE GENERAL NOTES SHEET 1 OF 1 FOR ADDITIONAL INFORMATION
2. SEE IRRIGATION DETAILS SHEETS
3. IRRIGATION SYSTEM PAID FOR UNDER 0170-6002
4. SHRUB DRIP IRRIGATION ZONE - TYPICAL
5. TREE DRIP SYSTEM - TYPICAL

IRRIGATION LEGEND

- CLASS 315 LATERAL
- SCH-40 PVC MAINLINE
- 1 6" SCH-40 PVC SLEEVE/BORE
- 2 4" SCH-40 PVC SLEEVE/BORE
- TREE DRIP SYSTEM
- SHRUB GROUND COVER DRIP SYSTEM
- HUNTER ICV SERIES VALVE(SIZE AS NOTED)
- GATE VALVE
- POINT OF CONNECTION, ***SEE DIAGRAM, THIS SHEET***
- C XC HYBRID CONTROLLER
- MS RAIN MOISTURE SENSOR
- A2 / 1.0" — 15.0 GPM
  - CONTROLLER NUMBER
  - ZONE NUMBER
  - ZONE GALLONAGE PER MINUTE - ACTUAL
  - VALVE SIZE (INCHES)

STATE OF TEXAS
MICHAEL P. MAUER
1510
REGISTERED LANDSCAPE ARCHITECT
SEP 9, 2022

FLATIRON/DRAGADOS LLC

M2L Associates Inc.
Houston, Texas 77024
T: 713-722-8897 F: 713-722-8048
Landscape Architecture • Land Planning • Urban Design

Texas Department of Transportation ® 2016

US 181 HARBOR BRIDGE

ENLARGED IRRIGATION PLAN BURLESON ST.

US 181

(STA 1047+00 -1100+00)

SHEET 12 OF 12

DESIGN	FED.RD. DIV.NO.	FEDERAL AID PROJECT NO.		HIGHWAY NO.
GRAPHICS	X	(See Title Sheet)		
	STATE	DISTRICT	COUNTY	SHEET NO.
CHECK	TEXAS	CRP	NUECES	B213
CHECK	CONTROL	SECTION	JOB	
	0101	06	095	70

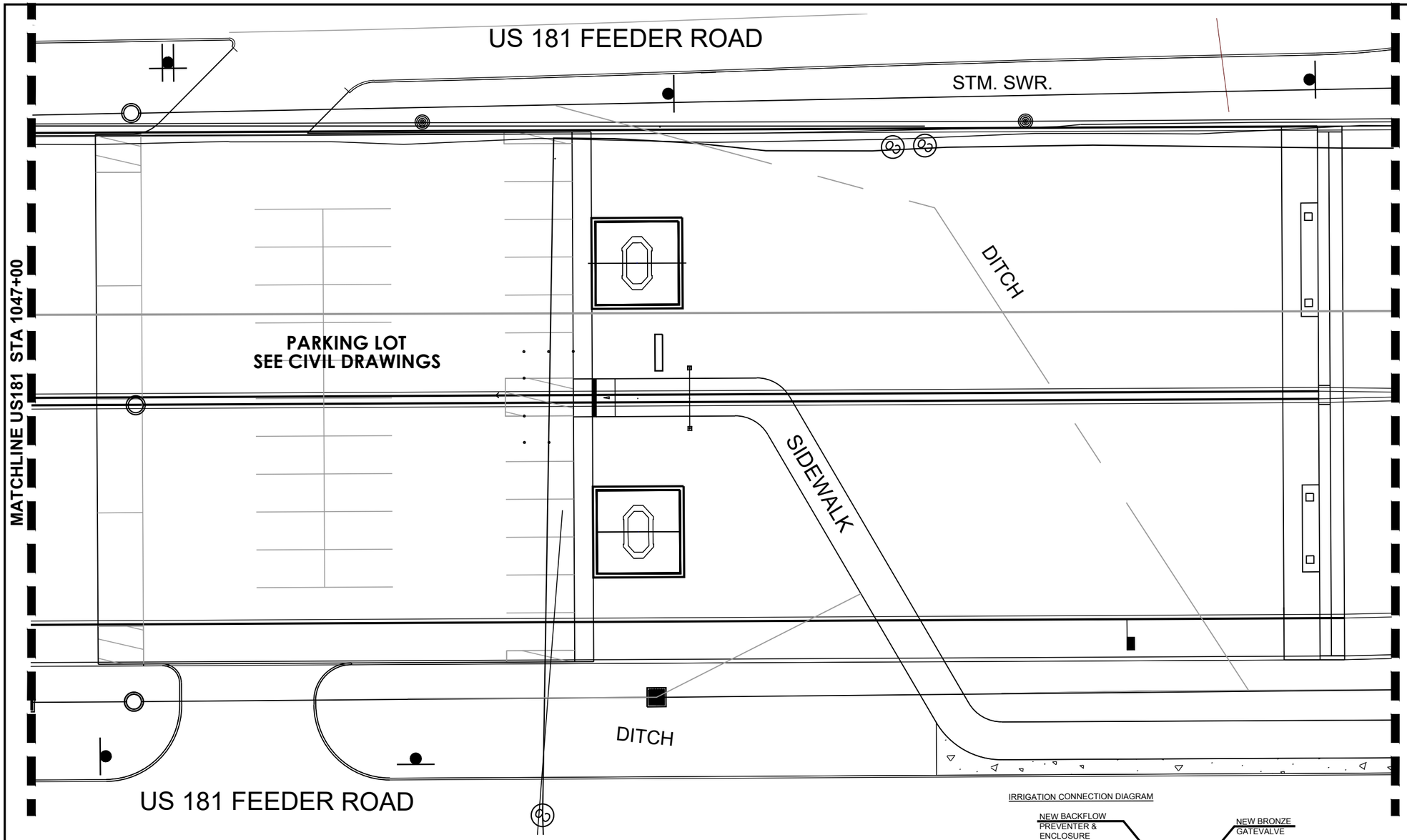

0 5 15 30
SCALE 1" = 30'

IRRIGATION CONNECTION DIAGRAM

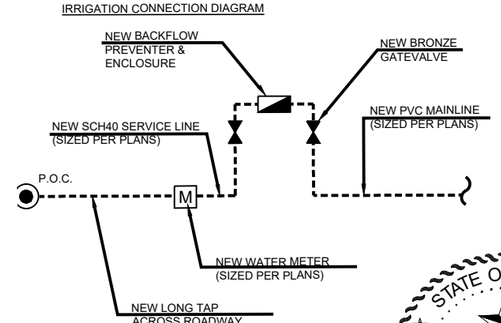

GENERAL NOTES:

1. SEE LANDSCAPE GENERAL NOTES SHEET 1 OF 1 FOR ADDITIONAL INFORMATION
2. SEE IRRIGATION DETAILS SHEETS
3. IRRIGATION SYSTEM PAID FOR UNDER 0170-6002
4. SHRUB DRIP IRRIGATION ZONE - TYPICAL
5. TREE DRIP SYSTEM - TYPICAL
6. CONTRACTOR TO HAND WATER PLANTS AS DESIGNED IN PLANTING DETAILS (PAID FOR UNDER 168-6001 VEGETATIVE WATERING)

IRRIGATION LEGEND

- CLASS 315 LATERAL
- SCH-40 PVC MAINLINE
- 1 — 6" SCH-40 PVC SLEEVE/BORE
- 2 — 4" SCH-40 PVC SLEEVE/BORE
- TREE DRIP SYSTEM
- SHRUB GROUND COVER DRIP SYSTEM
- HUNTER ICV SERIES VALVE(SIZE AS NOTED)
- GATE VALVE
- POINT OF CONNECTION, ***SEE DIAGRAM, THIS SHEET***
- C — XC HYBRID CONTROLLER
- MS — RAIN MOISTURE SENSOR

A2 / 1.0" — 15.0 GPM
- CONTROLLER NUMBER
- ZONE NUMBER
- ZONE GALLONAGE PER MINUTE - ACTUAL
- VALVE SIZE (INCHES)

STATE OF TEXAS
MICHAEL P. MAUER
1510
REGISTERED LANDSCAPE ARCHITECT
SEP 9, 2022

FLATIRON/DRAGADOS LLC

M2L Associates Inc.
Houston, Texas 77024
T: 713-722-8897 F: 713-722-8048
•Landscape Architecture•
•Land Planning•Urban Design•

Texas Department of Transportation ®2016

US 181 HARBOR BRIDGE

ENLARGED IRRIGATION PLAN BURLESON ST.

US 181

(STA 1042+80 -1047+40)

SHEET 12 OF 12

DESIGN	FED.RD. DIV.NO.	FEDERAL AID PROJECT NO.		HIGHWAY NO.
GRAPHICS	X	(See Title Sheet)		
	STATE	DISTRICT	COUNTY	SHEET NO.
CHECK	TEXAS	CRP	NUECES	B214
CHECK	CONTROL	SECTION	JOB	
	0101	06	095	71

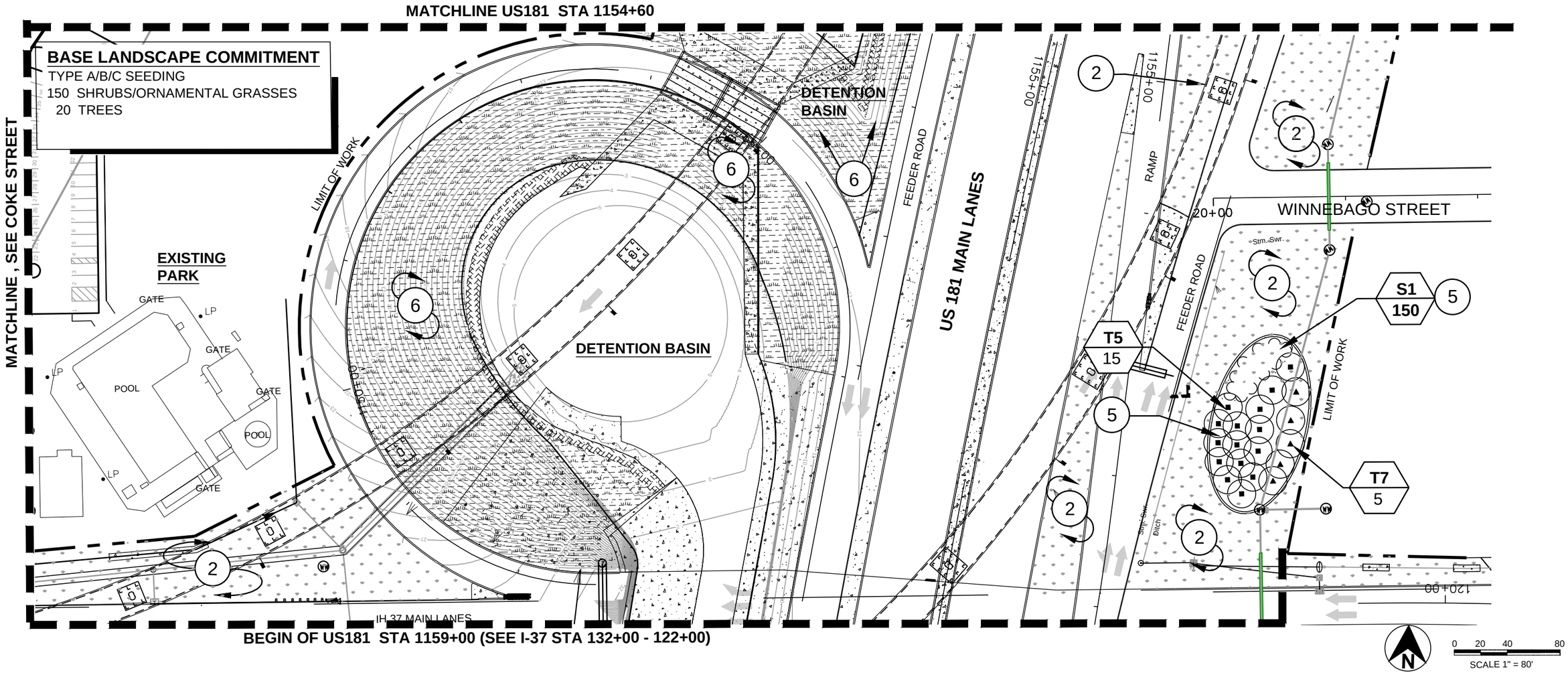

DRAWING LEGEND:

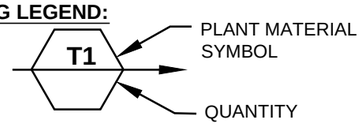

DETAIL NOTES:

1. **NOT USED**
2. TYPE A SEEDING , **SEE FERTILIZER, SEED, SOD, STRAW, COMPOST AND WATER, SHEET 1 OF 1**
3. NOT USED
4. NOT USED
5. 4" MULCH TOP DRESSING
6. TYPE B SEEDING, **SEE FERTILIZER, SEED, SOD, STRAW, COMPOST AND WATER, SHEET 1 OF 1**

GENERAL NOTES:

1. SEE LANDSCAPE GENERAL NOTES SHEET 1 OF 1 FOR ADDITIONAL INFORMATION

SHEET QUANTITIES - PLANTING

ITEM	DESCRIPTION	UNIT	QNTY.
0161-6012	GENERAL USE COMPOST	CY	660
0168-6001	VEGETATIVE WATERING	MG	420.8
0164-6066	DRILL SEEDING (PERM) (WARM OR COOL)	SY	7233
0164-6057	CELL FBR MLCH SEED (PERM)(SPECIALMIX)	SY	10,100
0166-6001	FERTILIZER	AC	10.0
0192-6012	MULCH	CY	166
0162-6003	STRAW OR HAY MULCH	SY	7,233
0192-6004	PLANT MATERIAL (3 GALLON)	EA	150
0192-6026	PLANT MATERIAL (65 GALLON)	EA	20
0192-6063	PLANT BED PREP (TYPE I)	SY	510
	NOT USED	-	-
0192-6065	PLANT BED PREP (TYPE III)	SY	160
0192-6066	PLANT BED PREP (TYPE IV)	SY	17,333
1006-6001	LANDSCAPE SOIL AMENDMENT (TYPE I)	EA	20
1006-6002	LANDSCAPE SOIL AMENDMENT (TYPE II)	SY	17,333
1006-6003	LANDSCAPE SOIL AMENDMENT (TYPE III)	SY	20
1006-6004	LANDSCAPE SOIL AMENDMENT (TYPE IV)	SY	480

DRAWING LEGEND:

TYPE A SEEDING - Permanent Drill Seeding (0164-6066) with Straw Mulch Cover (0162-6033)

TYPE B SEEDING - Permanent Cellulose Fiber Mulch Seeding (0164-6057)

STATE OF TEXAS
MICHAEL P. MAUER
1510
REGISTERED LANDSCAPE ARCHITECT
April 6, 2021

FLATIRON/DRAGADOS LLC

M2L Associates Inc.
Houston, Texas 77024
T: 713-722-8897 F: 713-722-8048
Landscape Architecture • Land Planning • Urban Design

Texas Department of Transportation ® 2016

US 181 HARBOR BRIDGE

PLANTING PLAN

US 181
(STA 1159+00 -1154+60)

SHEET 01 OF 12

DESIGN	FED.RD. DIV.NO.	FEDERAL AID PROJECT NO.		HIGHWAY NO.
GRAPHICS	X	(See Title Sheet)		
	STATE	DISTRICT	COUNTY	SHEET NO.
CHECK	TEXAS	CRP	NUECES	B301
CHECK	CONTROL	SECTION	JOB	72
	0101	06	095	

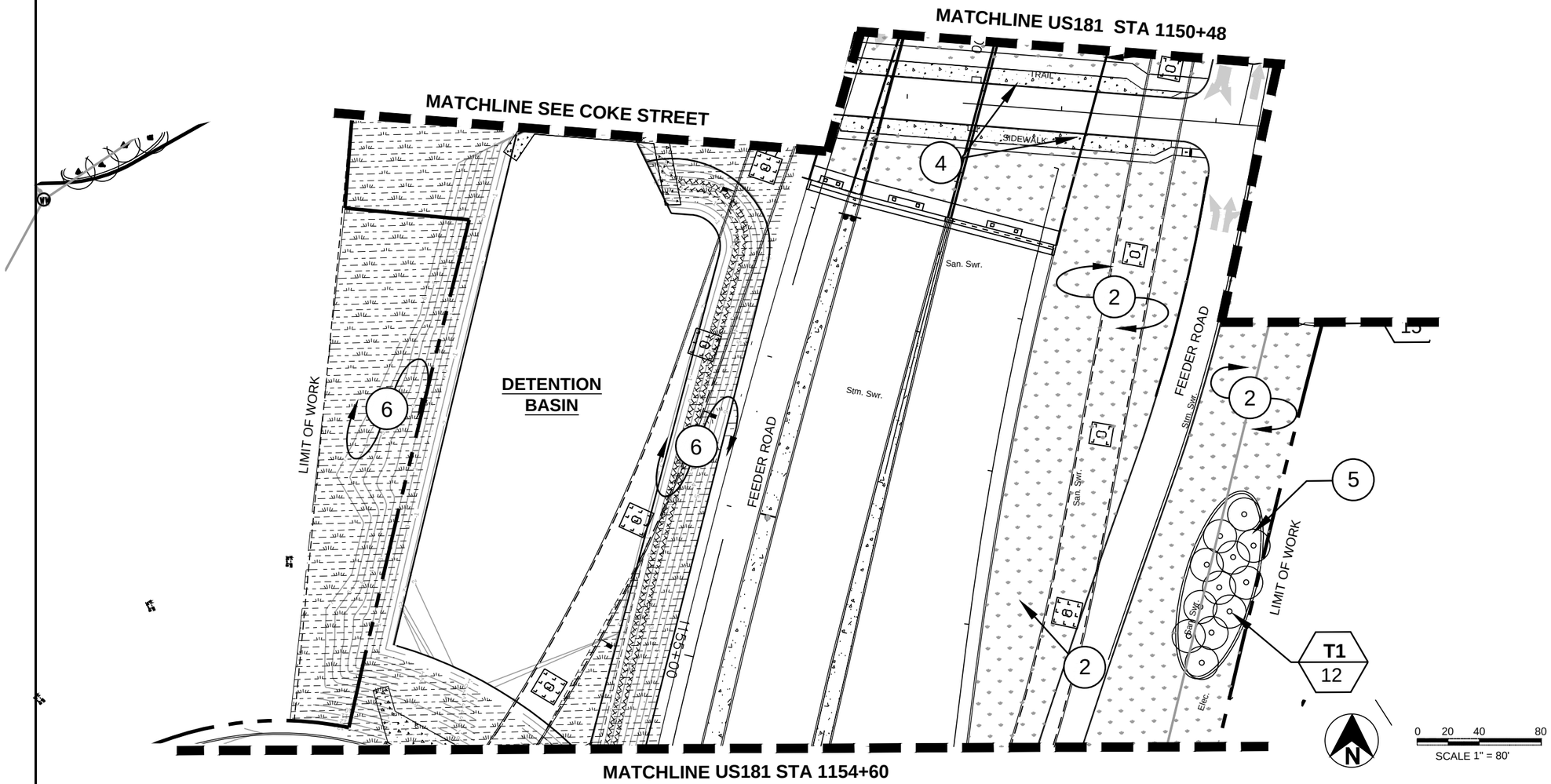

SHEET QUANTITIES - PLANTING			
ITEM	DESCRIPTION	UNIT	QNTY.
0161-6012	GENERAL USE COMPOST	CY	308
0168-6001	VEGETATIVE WATERING	MG	232.8
0164-6066	DRILL SEEDING (PERM) (WARM OR COOL)	SY	6270
0164-6057	CELL FBR MLCH SEED (PERM)(SPECIALMIX)	SY	5055
0166-6001	FERTILIZER	AC	6.9
0192-6012	MULCH	CY	75
0162-6003	STRAW OR HAY MULCH	SY	6270
0192-6004	PLANT MATERIAL (3 GALLON)	EA	0
0192-6026	PLANT MATERIAL (65 GALLON)	EA	12
0192-6063	PLANT BED PREP (TYPE I)	SY	440
	NOT USED		0
0192-6065	PLANT BED PREP (TYPE III)	SY	00
0192-6066	PLANT BED PREP (TYPE IV)	SY	11240
1006-6001	LANDSCAPE SOIL AMENDMENT (TYPE I)	EA	12
1006-6002	LANDSCAPE SOIL AMENDMENT (TYPE II)	SY	11240
1006-6003	LANDSCAPE SOIL AMENDMENT (TYPE III)	SY	12
1006-6004	LANDSCAPE SOIL AMENDMENT (TYPE IV)	SY	0

DETAIL NOTES:

1. **NOT USED**
2. TYPE A SEEDING , **SEE FERTILIZER, SEED, SOD, STRAW, COMPOST AND WATER, SHEET 1 OF 1**
3. NOT USED
4. NOT USED
5. 4" MULCH TOP DRESSING
6. TYPE B SEEDING, **SEE FERTILIZER, SEED, SOD, STRAW, COMPOST AND WATER, SHEET 1 OF 1**

DRAWING LEGEND:

TYPE A SEEDING - Permanent Drill Seeding (0164-6066) with Straw Mulch Cover (0162-6033)

TYPE B SEEDING - Permanent Cellulose Fiber Mulch Seeding (0164-6057)

GENERAL NOTES:

1. SEE LANDSCAPE GENERAL NOTES SHEET 1 OF 1 FOR ADDITIONAL INFORMATION

BASE LANDSCAPE COMMITMENT

TYPE A/B/C SEEDING
0 SHRUBS/ORNAMENTAL GRASSES
12 TREES

STATE OF TEXAS
MICHAEL P. MAUER
1510
REGISTERED LANDSCAPE ARCHITECT
April 6, 2021

FLATIRON/DRAGADOS LLC

M2L Associates Inc.
Houston, Texas 77024
T: 713-722-8897 F: 713-722-8048
Landscape Architecture • Land Planning • Urban Design

Texas Department of Transportation ® 2016

US 181 HARBOR BRIDGE

PLANTING PLAN

US 181
(STA 1150+48 -1154+60)

SHEET 02 OF 12

DESIGN	FED.RD. DIV.NO.	FEDERAL AID PROJECT NO.		HIGHWAY NO.
GRAPHICS	X	(See Title Sheet)		
	STATE	DISTRICT	COUNTY	SHEET NO.
CHECK	TEXAS	CRP	NUECES	B302
CHECK	CONTROL	SECTION	JOB	73
	0101	06	095	

GENERAL NOTES:

1. SEE LANDSCAPE GENERAL NOTES SHEET 1 OF 1 FOR ADDITIONAL INFORMATION

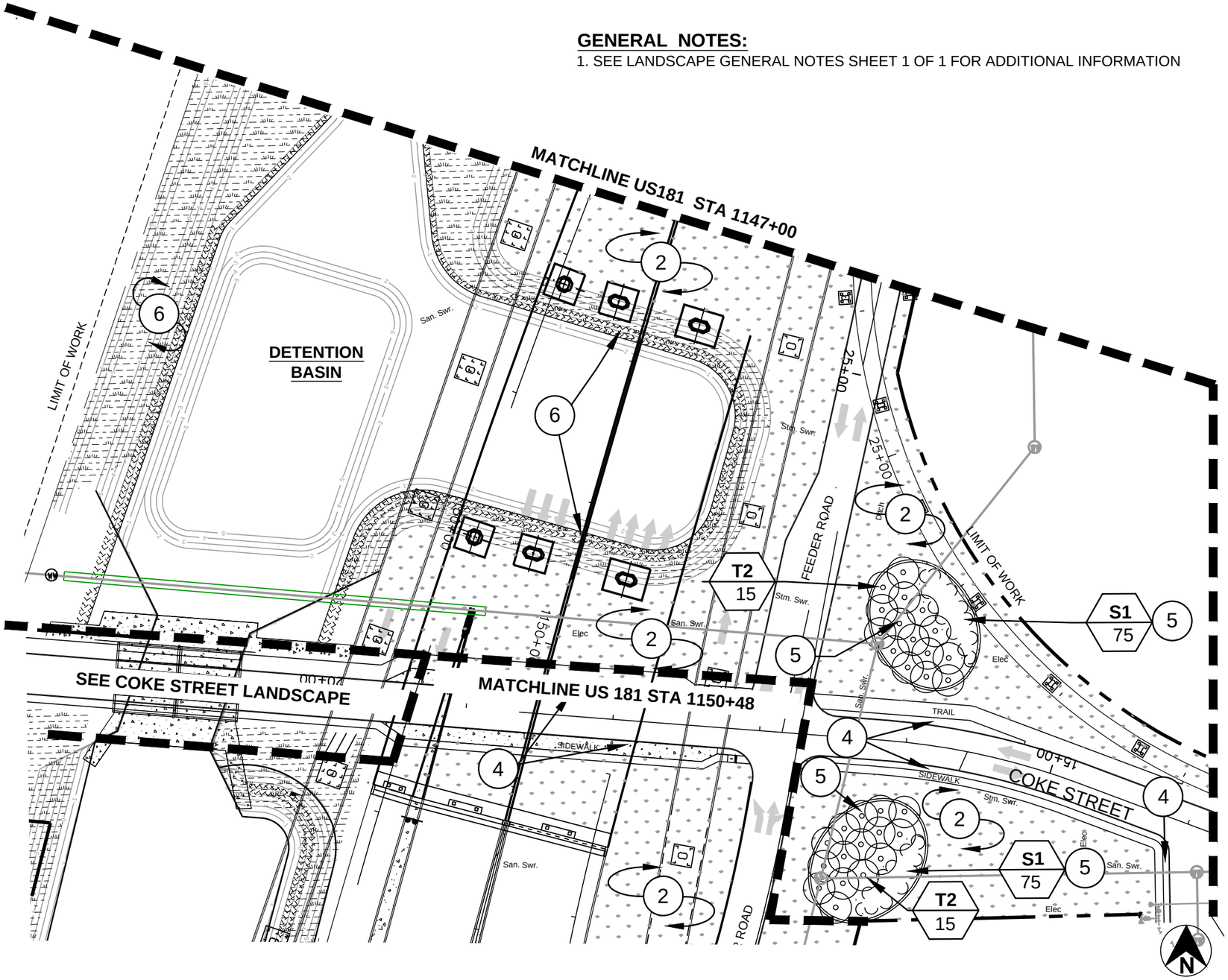

0 20 40 80
SCALE 1" = 80'

DRAWING LEGEND:

TYPE A SEEDING - Permanent Drill Seeding (0164-6066) with Straw Mulch Cover (0162-6033)

TYPE B SEEDING - Permanent Cellulose Fiber Mulch Seeding (0164-6057)

BASE LANDSCAPE COMMITMENT

TYPE A/B/C SEEDING
150 SHRUBS/ORNAMENTAL GRASSES
30 TREES

SHEET QUANTITIES - PLANTING

ITEM	DESCRIPTION	UNIT	QNTY.
0161-6012	GENERAL USE COMPOST	CY	384
0168-6001	VEGETATIVE WATERING	MG	345
0164-6066	DRILL SEEDING (PERM) (WARM OR COOL)	SY	10023
0164-6057	CELL FBR MLCH SEED (PERM)(SPECIALMIX)	SY	3890
0166-6001	FERTILIZER	AC	8.1
0192-6012	MULCH	CY	180
0162-6003	STRAW OR HAY MULCH	SY	10023
0192-6004	PLANT MATERIAL (3 GALLON)	EA	150
0192-6026	PLANT MATERIAL (65 GALLON)	EA	30
0192-6063	PLANT BED PREP (TYPE I)	SY	740
	NOT USED	-	-
0192-6065	PLANT BED PREP (TYPE III)	SY	160
0192-6066	PLANT BED PREP (TYPE IV)	SY	13913
1006-6001	LANDSCAPE SOIL AMENDMENT (TYPE I)	EA	30
1006-6002	LANDSCAPE SOIL AMENDMENT (TYPE II)	SY	13913
1006-6003	LANDSCAPE SOIL AMENDMENT (TYPE III)	SY	30
1006-6004	LANDSCAPE SOIL AMENDMENT (TYPE IV)	SY	480

DETAIL NOTES:

1. **NOT USED**
2. TYPE A SEEDING , **SEE FERTILIZER, SEED, SOD, STRAW, COMPOST AND WATER, SHEET 1 OF 1**
3. NOT USED
4. NOT USED
5. 4" MULCH TOP DRESSING
6. TYPE B SEEDING, **SEE FERTILIZER, SEED, SOD, STRAW, COMPOST AND WATER, SHEET 1 OF 1**

DRAWING LEGEND:

T1 — PLANT MATERIAL SYMBOL
QUANTITY

STATE OF TEXAS
MICHAEL P. MAUER
1510
REGISTERED LANDSCAPE ARCHITECT
April 6, 2021

FLATIRON/DRAGADOS LLC

M2L Associates Inc.
Houston, Texas 77024
T: 713-722-8897 F: 713-722-8048
Landscape Architecture • Land Planning • Urban Design

Texas Department of Transportation ® 2016

US 181 HARBOR BRIDGE

PLANTING PLAN

US 181
(STA 1147+00 -1150+48)

SHEET 03 OF 12

DESIGN	FED.RD. DIV.NO.	FEDERAL AID PROJECT NO.		HIGHWAY NO.
GRAPHICS	X	(See Title Sheet)		
	STATE	DISTRICT	COUNTY	SHEET NO.
CHECK	TEXAS	CRP	NUECES	B303
CHECK	CONTROL	SECTION	JOB	74
	0101	06	095	

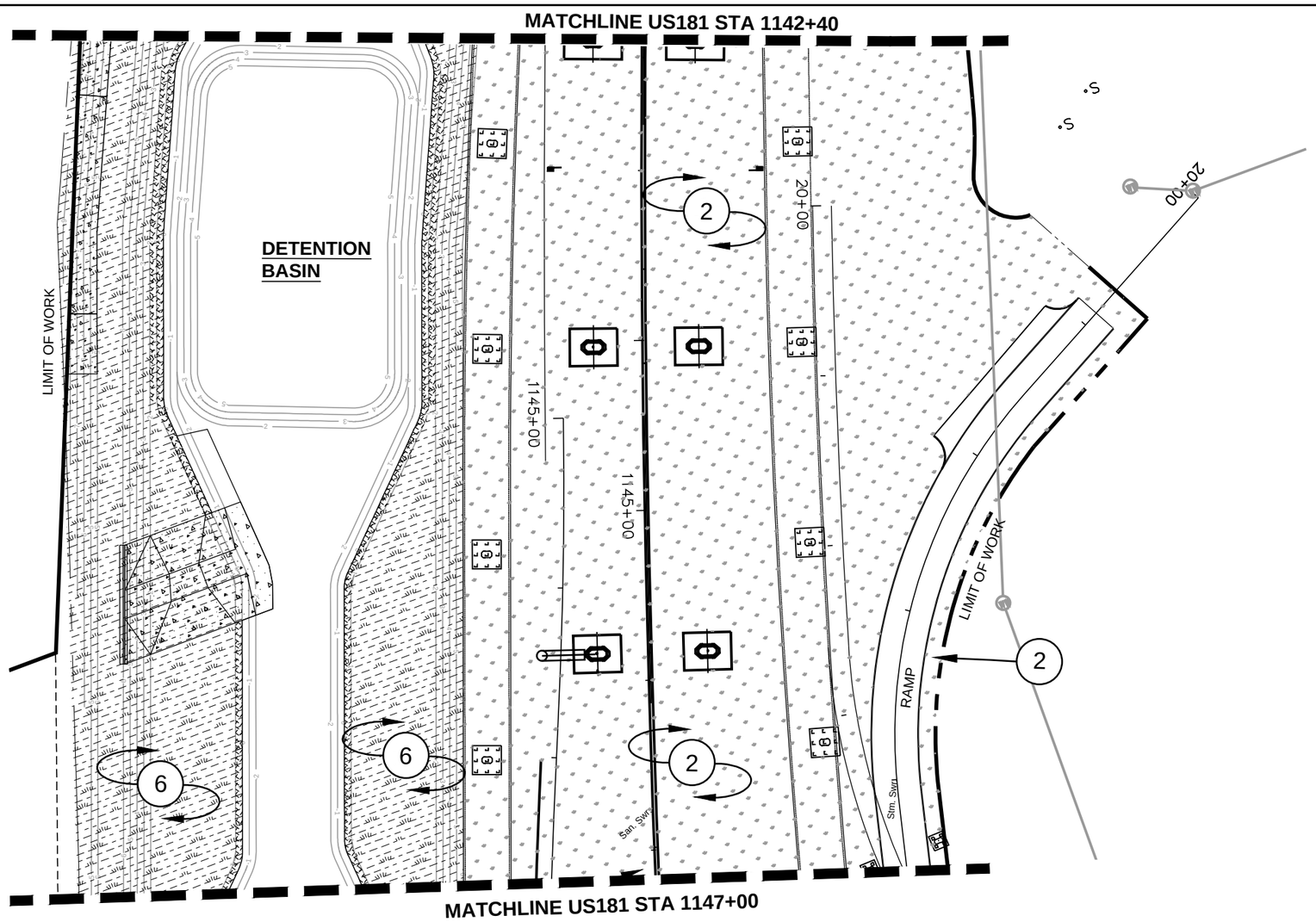

BASE LANDSCAPE COMMITMENT
TYPE A/B/C SEEDING
0 SHRUBS/ORNAMENTAL GRASSES
0 TREES

DRAWING LEGEND:

TYPE A SEEDING - Permanent Drill Seeding (0164-6066) with Straw Mulch Cover (0162-6033)

TYPE B SEEDING - Permanent Cellulose Fiber Mulch Seeding (0164-6057)

DRAWING LEGEND:

T1 — PLANT MATERIAL SYMBOL

QUANTITY

0 20 40 80
SCALE 1" = 80'

DETAIL NOTES:

1. **NOT USED**
2. TYPE A SEEDING , **SEE FERTILIZER, SEED, SOD, STRAW, COMPOST AND WATER, SHEET 1 OF 1**
3. NOT USED
4. NOT USED
5. 4" MULCH TOP DRESSING
6. TYPE B SEEDING, **SEE FERTILIZER, SEED, SOD, STRAW, COMPOST AND WATER, SHEET 1 OF 1**

GENERAL NOTES:

1. SEE LANDSCAPE GENERAL NOTES SHEET 1 OF 1 FOR ADDITIONAL INFORMATION

SHEET QUANTITIES - PLANTING

ITEM	DESCRIPTION	UNIT	QNTY.
0161-6012	GENERAL USE COMPOST	CY	624
0168-6001	VEGETATIVE WATERING	MG	559.4
0164-6066	DRILL SEEDING (PERM) (WARM OR COOL)	SY	15580
0164-6057	CELL FBR MLCH SEED (PERM)(SPECIALMIX)	SY	6975
0166-6001	FERTILIZER	AC	14.0
0192-6012	MULCH	CY	0
0162-6003	STRAW OR HAY MULCH	SY	15580
0192-6004	PLANT MATERIAL (3 GALLON)	EA	0
0192-6026	PLANT MATERIAL (65 GALLON)	EA	0
0192-6063	PLANT BED PREP (TYPE I)	SY	0
	NOT USED	-	-
0192-6065	PLANT BED PREP (TYPE III)	SY	0
0192-6066	PLANT BED PREP (TYPE IV)	SY	22555
1006-6001	LANDSCAPE SOIL AMENDMENT (TYPE I)	EA	0
1006-6002	LANDSCAPE SOIL AMENDMENT (TYPE II)	SY	22555
1006-6003	LANDSCAPE SOIL AMENDMENT (TYPE III)	SY	0
1006-6004	LANDSCAPE SOIL AMENDMENT (TYPE IV)	SY	0

STATE OF TEXAS
MICHAEL P. MAUER
1510
REGISTERED LANDSCAPE ARCHITECT
April 6, 2021

FLATIRON/DRAGADOS LLC

M2L Associates Inc.
Houston, Texas 77024
T: 713-722-8897 F: 713-722-8048
Landscape Architecture
Land Planning Urban Design

Texas Department of Transportation ® 2016

US 181 HARBOR BRIDGE

PLANTING PLAN

US 181
(STA 1142+40 -1147+00)

SHEET 04 OF 12

DESIGN	FED.RD. DIV.NO.	FEDERAL AID PROJECT NO.		HIGHWAY NO.
GRAPHICS	X	(See Title Sheet)		
	STATE	DISTRICT	COUNTY	SHEET NO.
CHECK	TEXAS	CRP	NUECES	B304
CHECK	CONTROL	SECTION	JOB	75
	0101	06	095	

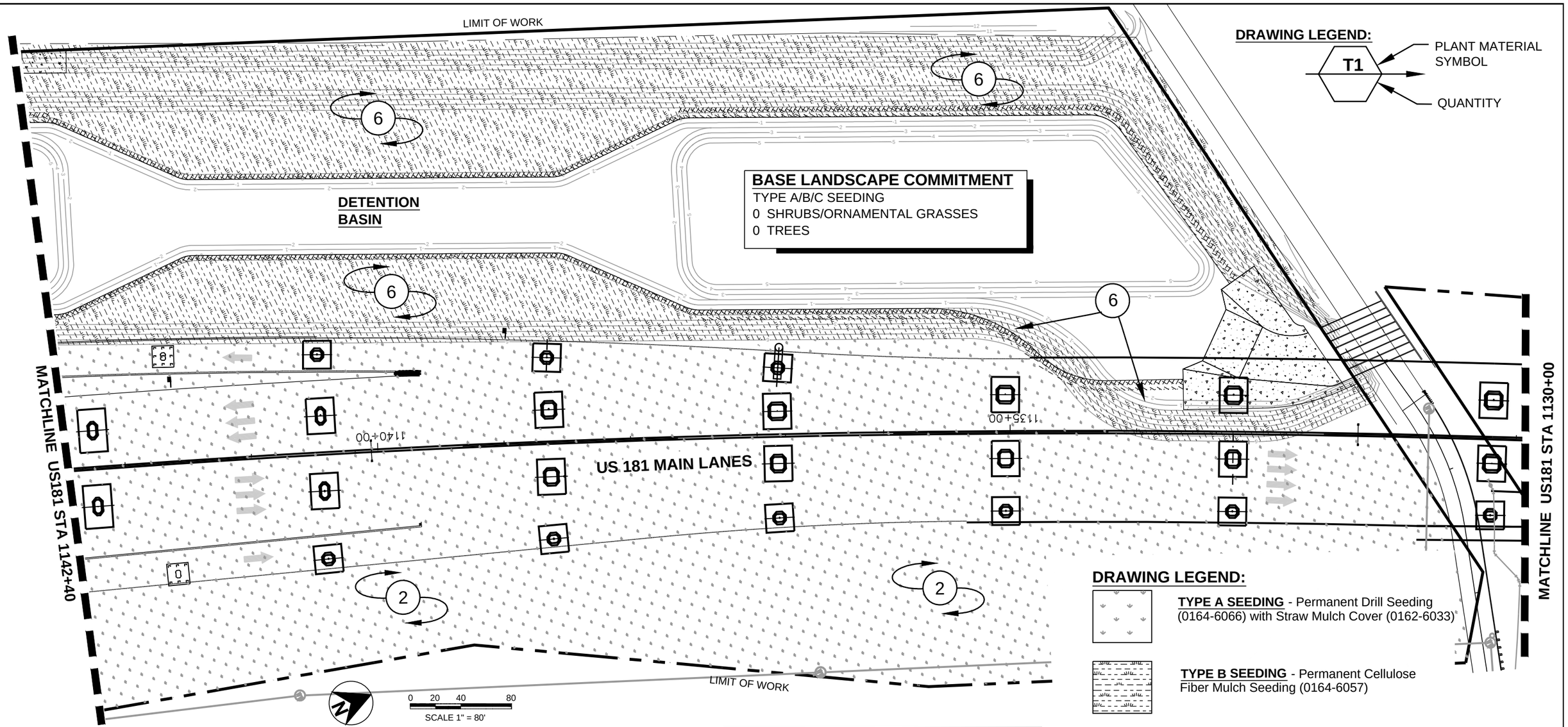

DRAWING LEGEND:

TYPE A SEEDING - Permanent Drill Seeding (0164-6066) with Straw Mulch Cover (0162-6033)

TYPE B SEEDING - Permanent Cellulose Fiber Mulch Seeding (0164-6057)

DETAIL NOTES:

1. **NOT USED**
2. TYPE A SEEDING , **SEE FERTILIZER, SEED, SOD, STRAW, COMPOST AND WATER, SHEET 1 OF 1**
3. NOT USED
4. NOT USED
5. 4" MULCH TOP DRESSING
6. TYPE B SEEDING, **SEE FERTILIZER, SEED, SOD, STRAW, COMPOST AND WATER, SHEET 1 OF 1**

GENERAL NOTES:

1. SEE LANDSCAPE GENERAL NOTES SHEET 1 OF 1 FOR ADDITIONAL INFORMATION

SHEET QUANTITIES - PLANTING

ITEM	DESCRIPTION	UNIT	QNTY.
0161-6012	GENERAL USE COMPOST	CY	1230
0168-6001	VEGETATIVE WATERING	MG	1058.4
0164-6066	DRILL SEEDING (PERM) (WARM OR COOL)	SY	27910
0164-6057	CELL FBR MLCH SEED (PERM)(SPECIALMIX)	SY	14780
0166-6001	FERTILIZER	AC	26.5
0192-6012	MULCH	CY	0
0162-6003	STRAW OR HAY MULCH	SY	27910
0192-6004	PLANT MATERIAL (3 GALLON)	EA	0
0192-6026	PLANT MATERIAL (65 GALLON)	EA	0
0192-6063	PLANT BED PREP (TYPE I)	SY	0
	NOT USED	-	-
0192-6065	PLANT BED PREP (TYPE III)	SY	0
0192-6066	PLANT BED PREP (TYPE IV)	SY	42690
1006-6001	LANDSCAPE SOIL AMENDMENT (TYPE I)	EA	0
1006-6002	LANDSCAPE SOIL AMENDMENT (TYPE II)	SY	42690
1006-6003	LANDSCAPE SOIL AMENDMENT (TYPE III)	SY	0
1006-6004	LANDSCAPE SOIL AMENDMENT (TYPE IV)	SY	0

STATE OF TEXAS
MICHAEL P. MAUER
1510
REGISTERED LANDSCAPE ARCHITECT
April 6, 2021

FLATIRON/DRAGADOS LLC

M2L Associates Inc.
Houston, Texas 77024
T: 713-722-8897 F: 713-722-8048
Landscape Architecture • Land Planning • Urban Design

Texas Department of Transportation ©2016

US 181 HARBOR BRIDGE

PLANTING PLAN

US 181
(STA 1142+40 -1130+00)

SHEET 05 OF 12

DESIGN	FED.RD. DIV.NO.	FEDERAL AID PROJECT NO.		HIGHWAY NO.
GRAPHICS	X	(See Title Sheet)		
	STATE	DISTRICT	COUNTY	SHEET NO.
CHECK	TEXAS	CRP	NUECES	B305
CHECK	CONTROL	SECTION	JOB	76
	0101	06	095	

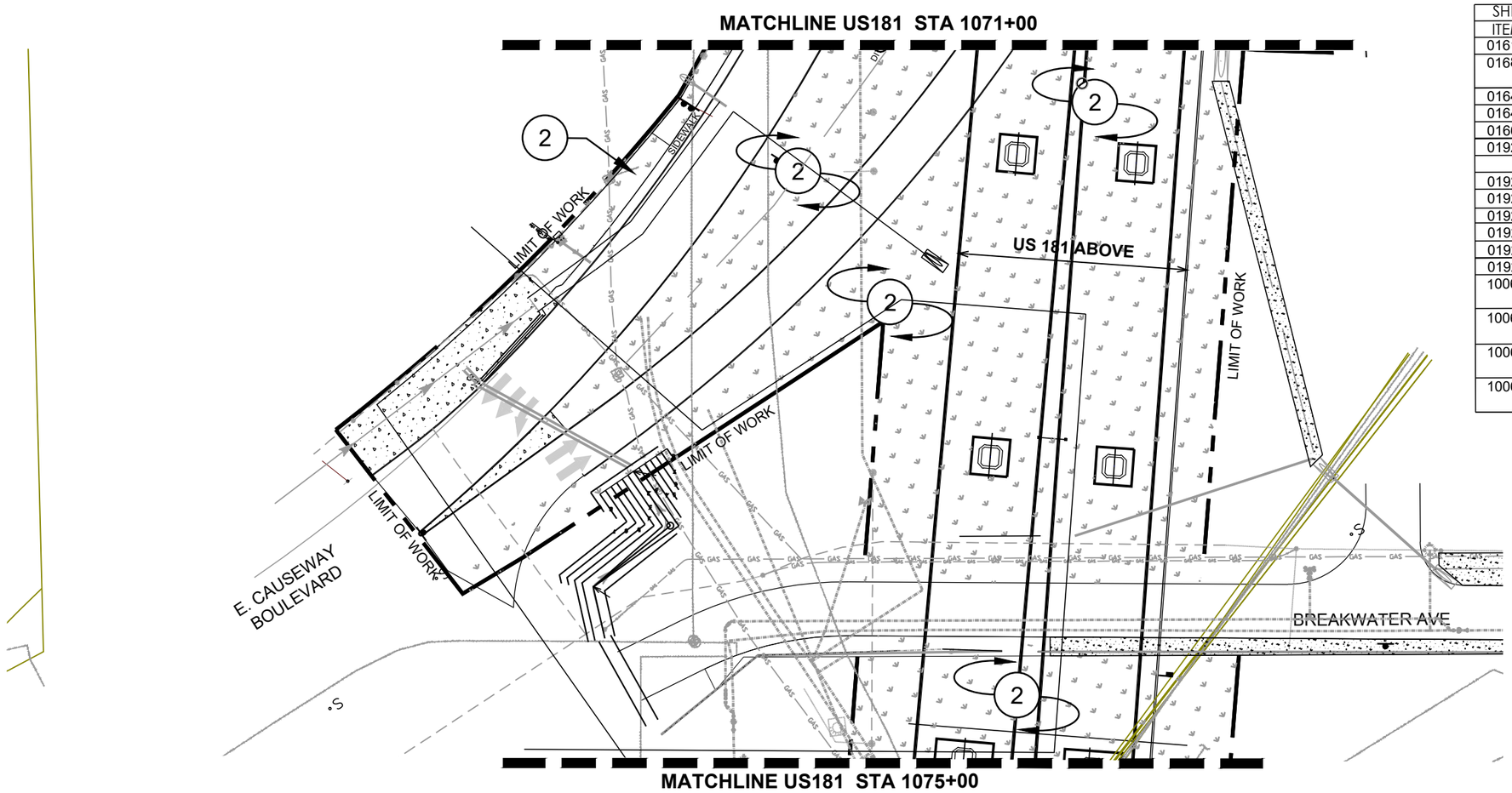

SHEET QUANTITIES - PLANTING			
ITEM	DESCRIPTION	UNIT	QNTY.
0161-6012	GENERAL USE COMPOST	CY	321
0168-6001	VEGETATIVE WATERING	MG	288.1
0164-6066	DRILL SEEDING (PERM) (WARM, COOL)	SY	11628
0164-6057	CELL FBR MLCH SEED(PERM)(SPECIAL MIX)	SY	0
0166-6001	FERTILIZER	AC	7.2
0192-6012	MULCH	CY	0
-	NOT USED	-	-
0192-6004	PLANT MATERIAL (3 GALLON)	EA	0
0192-6026	PLANT MATERIAL (65 GALLON)	EA	0
0192-6063	PLANT BED PREP (TYPE I)	SY	0
0192-6003	STRAW OR HAY MULCH	SY	11628
0192-6065	PLANT BED PREP (TYPE III)	SY	0
0192-6066	PLANT BED PREP (TYPE IV)	SY	11628
1006-6001	LANDSCAPE SOIL AMENDMENT (TYPE I)	EA	0
1006-6002	LANDSCAPE SOIL AMENDMENT (TYPE II)	SY	11628
1006-6003	LANDSCAPE SOIL AMENDMENT (TYPE III)	SY	0
1006-6004	LANDSCAPE SOIL AMENDMENT (TYPE IV)	SY	0

DRAWING LEGEND:

T1 / 3 — PLANT MATERIAL SYMBOL; QUANTITY

0 20 40 80
SCALE 1" = 80'

DRAWING LEGEND:

TYPE A SEEDING - Permanent Drill Seeding (0164-6066) with Straw Mulch Cover (0162-6033)

TYPE B SEEDING - Permanent Cellulose Fiber Mulch Seeding (0164-6057)

CONCRETE RIPRAP - See Civil Engineering Drawings

DETAIL NOTES:

1. NOT USED
2. TYPE A SEEDING, **SEE FERTILIZER, SEED, SOD, STRAW, COMPOST AND WATER, SHEET 1 OF 1**
3. TYPE B SEEDING, **SEE FERTILIZER, SEED, SOD, STRAW, COMPOST AND WATER, SHEET 1 OF 1**
4. FULL COVERAGE TYPE A SEEDING BETWEEN SIDEWALK AND ROADWAY CURB
5. 4" MULCH TOP DRESSING

BASE LANDSCAPE COMMITMENT

TYPE A/B SEEDING
0 SHRUBS/ORNAMENTAL GRASSES
0 TREES

GENERAL NOTES:

1. SEE LANDSCAPE GENERAL NOTES SHEET 1 OF 1 FOR ADDITIONAL INFORMATION

T1 / 3 — PLANT MATERIAL SYMBOL; QUANTITY

STATE OF TEXAS
MICHAEL P. MAUER
1510
REGISTERED LANDSCAPE ARCHITECT
February 7, 2022

FLATIRON/DRAGADOS LLC

M2L Associates Inc.
Houston, Texas 77024
T: 713-722-8897 F: 713-722-8048
•Landscape Architecture•
•Land Planning• Urban Design•

Texas Department of Transportation ® 2016

US 181 HARBOR BRIDGE

PLANTING PLAN

US 181
(STA 1075+00 -1071+00)

SHEET 06 OF 12

DESIGN	FED.RD. DIV.NO.	FEDERAL AID PROJECT NO.		HIGHWAY NO.
GRAPHICS	X	(See Title Sheet)		
	STATE	DISTRICT	COUNTY	SHEET NO.
CHECK	TEXAS	CRP	NUECES	B306
CHECK	CONTROL	SECTION	JOB	
	0101	06	095	77

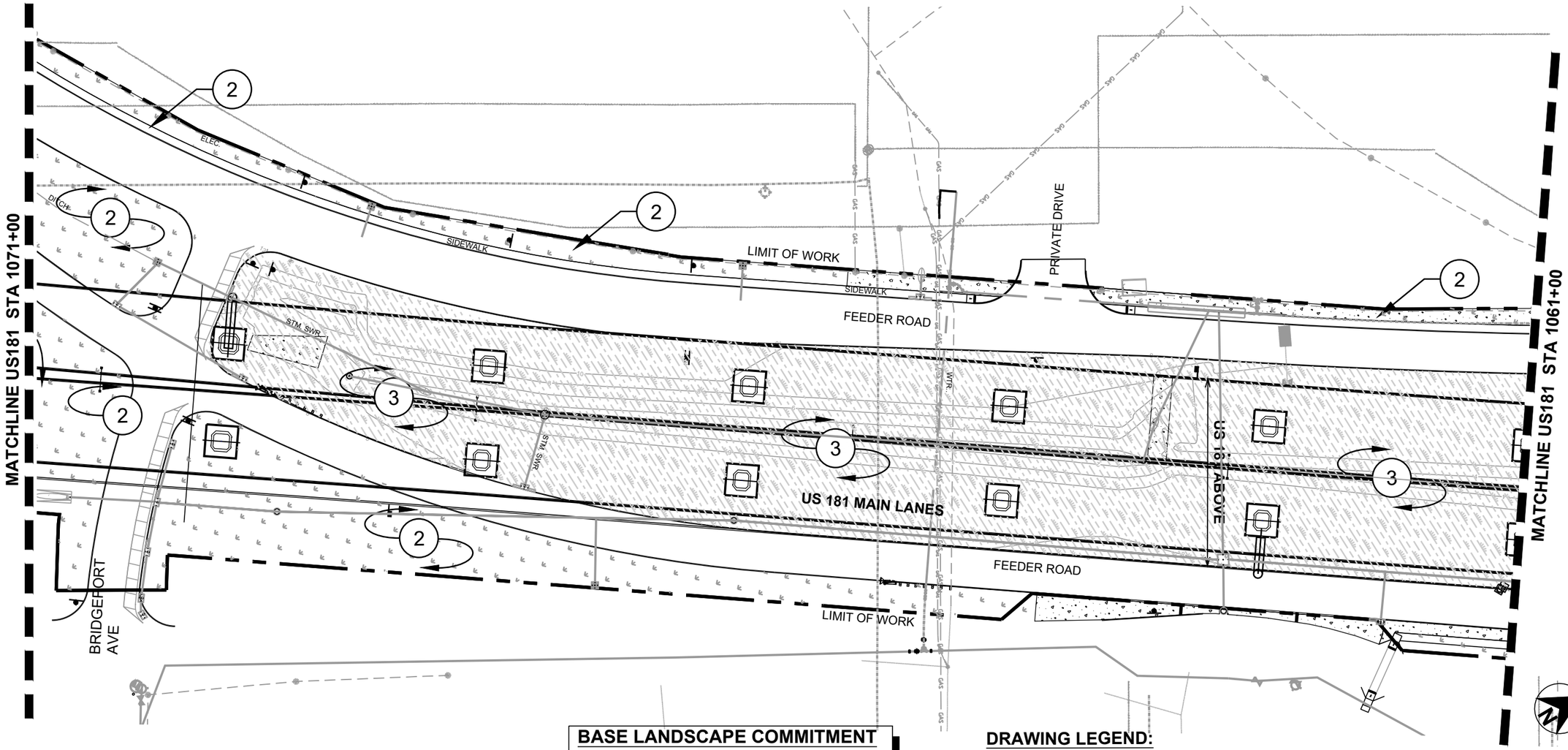

BASE LANDSCAPE COMMITMENT

TYPE A/B SEEDING
0 SHRUBS/ORNAMENTAL GRASSES
0 TREES

DRAWING LEGEND:

TYPE A SEEDING - Permanent Drill Seeding (0164-6066) with Straw Mulch Cover (0162-6033)

TYPE B SEEDING - Permanent Cellulose Fiber Mulch Seeding (0164-6057)

CONCRETE RIPRAP - See Civil Engineering Drawings

DETAIL NOTES:

1. NOT USED
2. TYPE A SEEDING, **SEE FERTILIZER, SEED, SOD, STRAW, COMPOST AND WATER, SHEET 1 OF 1**
3. TYPE B SEEDING, **SEE FERTILIZER, SEED, SOD, STRAW, COMPOST AND WATER, SHEET 1 OF 1**
4. FULL COVERAGE TYPE A SEEDING BETWEEN SIDEWALK AND ROADWAY CURB
5. 4" MULCH TOP DRESSING

SHEET QUANTITIES - PLANTING

ITEM	DESCRIPTION	UNIT	QNTY.
0161-6012	GENERAL USE COMPOST	CY	495
0168-6001	VEGETATIVE WATERING	MG	370.1
0164-6066	DRILL SEEDING (PERM) (WARM, COOL)	SY	4650
0164-6057	CELL FBR MLCH SEED(PERM)(SPECIAL MIX)	SY	12815
0166-6001	FERTILIZER	AC	10.5
0192-6012	MULCH	CY	0
-	NOT USED	-	-
0192-6004	PLANT MATERIAL (3 GALLON)	EA	0
0192-6026	PLANT MATERIAL (65 GALLON)	EA	0
0192-6063	PLANT BED PREP (TYPE I)	SY	0
0192-6003	STRAW OR HAY MULCH	SY	4650
0192-6065	PLANT BED PREP (TYPE III)	SY	0
0192-6066	PLANT BED PREP (TYPE IV)	SY	17915
1006-6001	LANDSCAPE SOIL AMENDMENT (TYPE I)	EA	0
1006-6002	LANDSCAPE SOIL AMENDMENT (TYPE II)	SY	17915
1006-6003	LANDSCAPE SOIL AMENDMENT (TYPE III)	SY	0
1006-6004	LANDSCAPE SOIL AMENDMENT (TYPE IV)	SY	0

DRAWING LEGEND:

T1
3

PLANT MATERIAL SYMBOL
QUANTITY

T1
3

PLANT MATERIAL SYMBOL
QUANTITY

STATE OF TEXAS
MICHAEL P. MAUER
1510
REGISTERED LANDSCAPE ARCHITECT
February 7, 2022

FLATIRON/DRAGADOS LLC

M2L Associates Inc.
Houston, Texas 77024
T: 713-722-8897 F: 713-722-8048
•Landscape Architecture•
•Land Planning• Urban Design•

Texas Department of Transportation ® 2016

US 181 HARBOR BRIDGE

PLANTING PLAN

US 181
(STA 1071+00 -1061+00)

SHEET 07 OF 12

DESIGN	FED.RD. DIV.NO.	FEDERAL AID PROJECT NO.		HIGHWAY NO.
GRAPHICS	X	(See Title Sheet)		
	STATE	DISTRICT	COUNTY	SHEET NO.
CHECK	TEXAS	CRP	NUECES	B307
CHECK	CONTROL	SECTION	JOB	
	0101	06	095	78

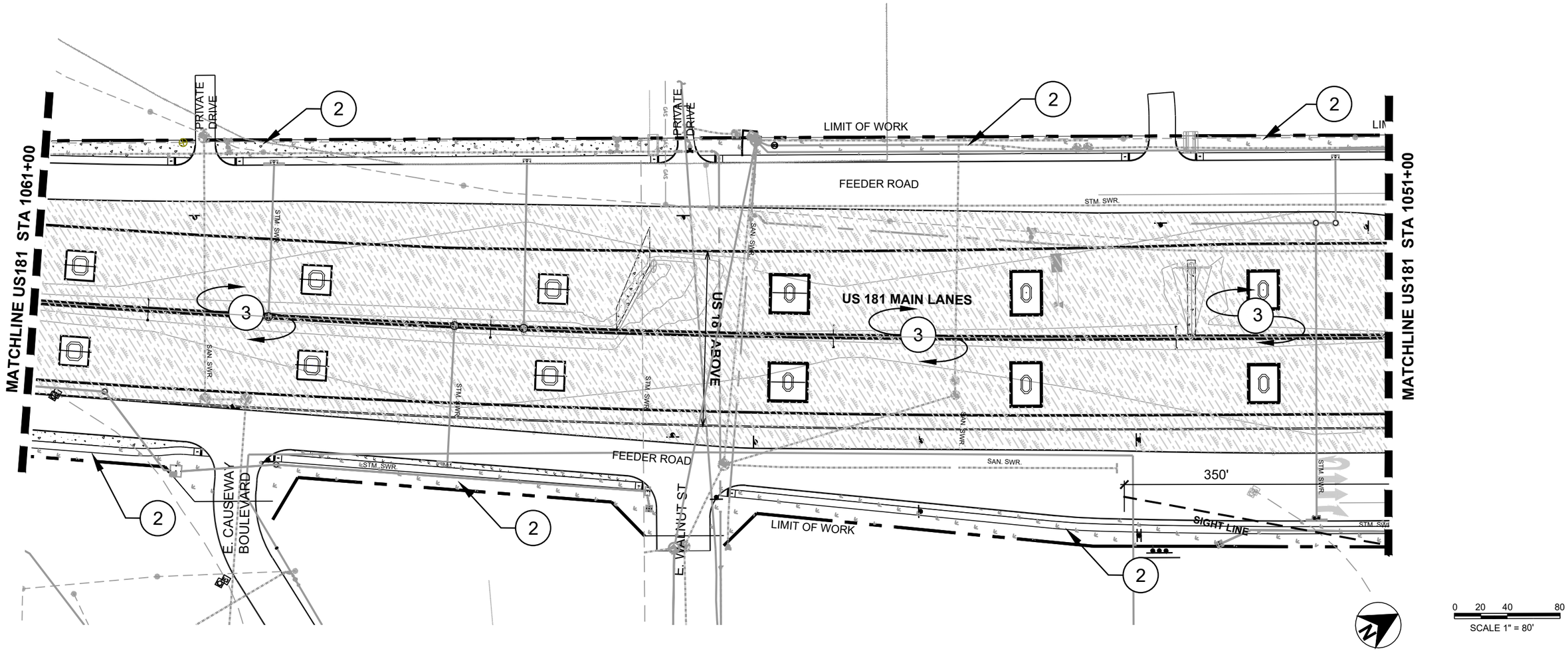

GENERAL NOTES:

1. SEE LANDSCAPE GENERAL NOTES SHEET 1 OF 1 FOR ADDITIONAL INFORMATION

DETAIL NOTES:

1. NOT USED
2. TYPE A SEEDING, **SEE FERTILIZER, SEED, SOD, STRAW, COMPOST AND WATER, SHEET 1 OF 1**
3. TYPE B SEEDING, **SEE FERTILIZER, SEED, SOD, STRAW, COMPOST AND WATER, SHEET 1 OF 1**
4. FULL COVERAGE TYPE A SEEDING BETWEEN SIDEWALK AND ROADWAY CURB
5. 4" MULCH TOP DRESSING

DRAWING LEGEND:

T1
3

PLANT MATERIAL SYMBOL

QUANTITY

SHEET QUANTITIES - PLANTING

ITEM	DESCRIPTION	UNIT	QNTY.
0161-6012	GENERAL USE COMPOST	CY	0
0168-6001	VEGETATIVE WATERING	MG	3755
0164-6066	DRILL SEEDING (PERM) (WARM, COOL)	SY	0
0164-6057	CELL FBR MLCH SEED(PERM)(SPECIAL MIX)	SY	19680
0166-6001	FERTILIZER	AC	14.7
0192-6012	MULCH	CY	0
	NOT USED		300
0192-6004	PLANT MATERIAL (3 GALLON)	EA	0
0192-6026	PLANT MATERIAL (65 GALLON)	EA	0
0192-6063	PLANT BED PREP (TYPE I)	SY	0
0192-6003	STRAW OR HAY MULCH	SY	300
0192-6065	PLANT BED PREP (TYPE III)	SY	0
0192-6066	PLANT BED PREP (TYPE IV)	SY	23435
1006-6001	LANDSCAPE SOIL AMENDMENT (TYPE I)	EA	0
1006-6002	LANDSCAPE SOIL AMENDMENT (TYPE II)	SY	23735
1006-6003	LANDSCAPE SOIL AMENDMENT (TYPE III)	SY	0
1006-6004	LANDSCAPE SOIL AMENDMENT (TYPE IV)	SY	0

STATE OF TEXAS
MICHAEL P. MAUER
1510
REGISTERED LANDSCAPE ARCHITECT
SEP 9, 2022

FLATIRON/DRAGADOS LLC

M2L Associates Inc.
Houston, Texas 77024
T: 713-722-8897 F: 713-722-8048
Landscape Architecture • Land Planning • Urban Design

Texas Department of Transportation ® 2016

US 181 HARBOR BRIDGE

PLANTING PLAN

US 181
(STA 1061+00 -1051+00)

SHEET 08 OF 12

DESIGN	FED.RD. DIV.NO.	FEDERAL AID PROJECT NO.		HIGHWAY NO.
GRAPHICS	X	(See Title Sheet)		
	STATE	DISTRICT	COUNTY	SHEET NO.
CHECK	TEXAS	CRP	NUECES	B308
CHECK	CONTROL	SECTION	JOB	
	0101	06	095	79

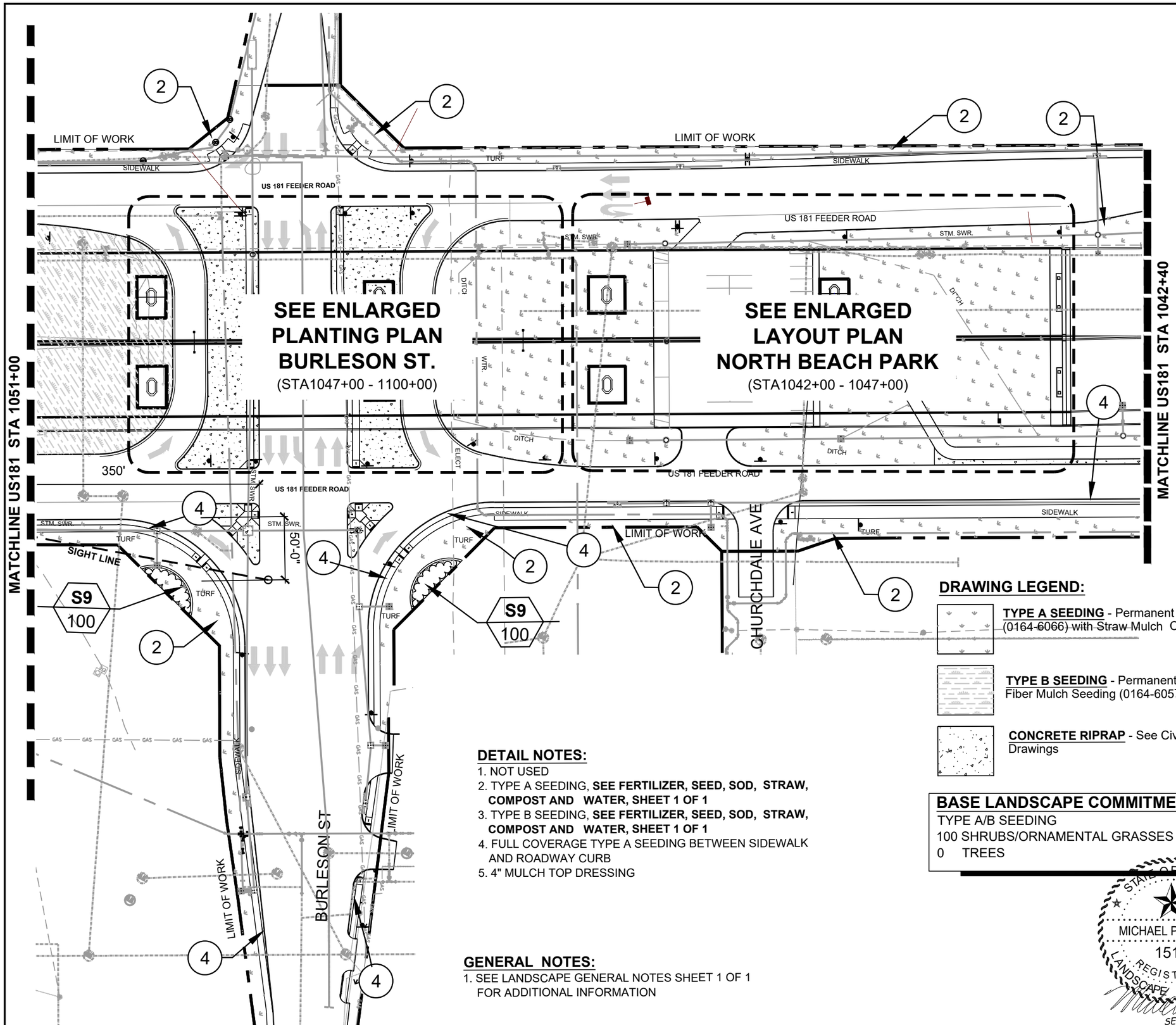

(SHEET QUANTITIES DO INCLUDE NORTH SUP PARKING)

SHEET QUANTITIES - PLANTING			
ITEM	DESCRIPTION	UNIT	QNTY.
0161-6012	GENERAL USE COMPOST	CY	253
0168-6001	VEGETATIVE WATERING	MG	154.4
0164-6066	DRILL SEEDING (PERM) (WARM, COOL)	SY	7422
0164-6057	CELL FBR MLCH SEED(PERM)(SPECIAL MIX)	SY	1722
0166-6001	FERTILIZER	AC	5.6
0192-6012	MULCH	CY	30
-	NOT USED	-	-
0192-6004	PLANT MATERIAL (3 GALLON)	EA	200
0192-6026	PLANT MATERIAL (65 GALLON)	EA	0
0192-6063	PLANT BED PREP (TYPE I)	SY	0
0192-6003	STRAW OR HAY MULCH	SY	7422
0192-6065	PLANT BED PREP (TYPE III)	SY	180
0192-6066	PLANT BED PREP (TYPE IV)	SY	9144
1006-6001	LANDSCAPE SOIL AMENDMENT (TYPE I)	EA	0
1006-6002	LANDSCAPE SOIL AMENDMENT (TYPE II)	SY	9144
1006-6003	LANDSCAPE SOIL AMENDMENT (TYPE III)	SY	0
1006-6004	LANDSCAPE SOIL AMENDMENT (TYPE IV)	SY	540

DRAWING LEGEND:

T1 / 3 — PLANT MATERIAL SYMBOL; QUANTITY

DRAWING LEGEND:

TYPE A SEEDING - Permanent Drill Seeding (0164-6066) with Straw Mulch Cover (0162-6033)

TYPE B SEEDING - Permanent Cellulose Fiber Mulch Seeding (0164-6057)

CONCRETE RIPRAP - See Civil Engineering Drawings

0 20 40 80
SCALE 1" = 80'

DETAIL NOTES:

1. NOT USED
2. TYPE A SEEDING, **SEE FERTILIZER, SEED, SOD, STRAW, COMPOST AND WATER, SHEET 1 OF 1**
3. TYPE B SEEDING, **SEE FERTILIZER, SEED, SOD, STRAW, COMPOST AND WATER, SHEET 1 OF 1**
4. FULL COVERAGE TYPE A SEEDING BETWEEN SIDEWALK AND ROADWAY CURB
5. 4" MULCH TOP DRESSING

GENERAL NOTES:

1. SEE LANDSCAPE GENERAL NOTES SHEET 1 OF 1 FOR ADDITIONAL INFORMATION

BASE LANDSCAPE COMMITMENT

TYPE A/B SEEDING
100 SHRUBS/ORNAMENTAL GRASSES
0 TREES

STATE OF TEXAS
MICHAEL P. MAUER
1510
REGISTERED LANDSCAPE ARCHITECT
SEP 9, 2022

FLATIRON/DRAGADOS LLC

M2L Associates Inc.
Houston, Texas 77024
T: 713-722-8897 F: 713-722-8048
Landscape Architecture • Land Planning • Urban Design

Texas Department of Transportation ® 2016

US 181 HARBOR BRIDGE

PLANTING PLAN

US 181
(STA 1051+00 -1042+40)

SHEET 09 OF 12

DESIGN	FED.RD. DIV.NO.	FEDERAL AID PROJECT NO.		HIGHWAY NO.
GRAPHICS	X	(See Title Sheet)		
	STATE	DISTRICT	COUNTY	SHEET NO.
CHECK	TEXAS	CRP	NUECES	B309
CHECK	CONTROL	SECTION	JOB	
	0101	06	095	80

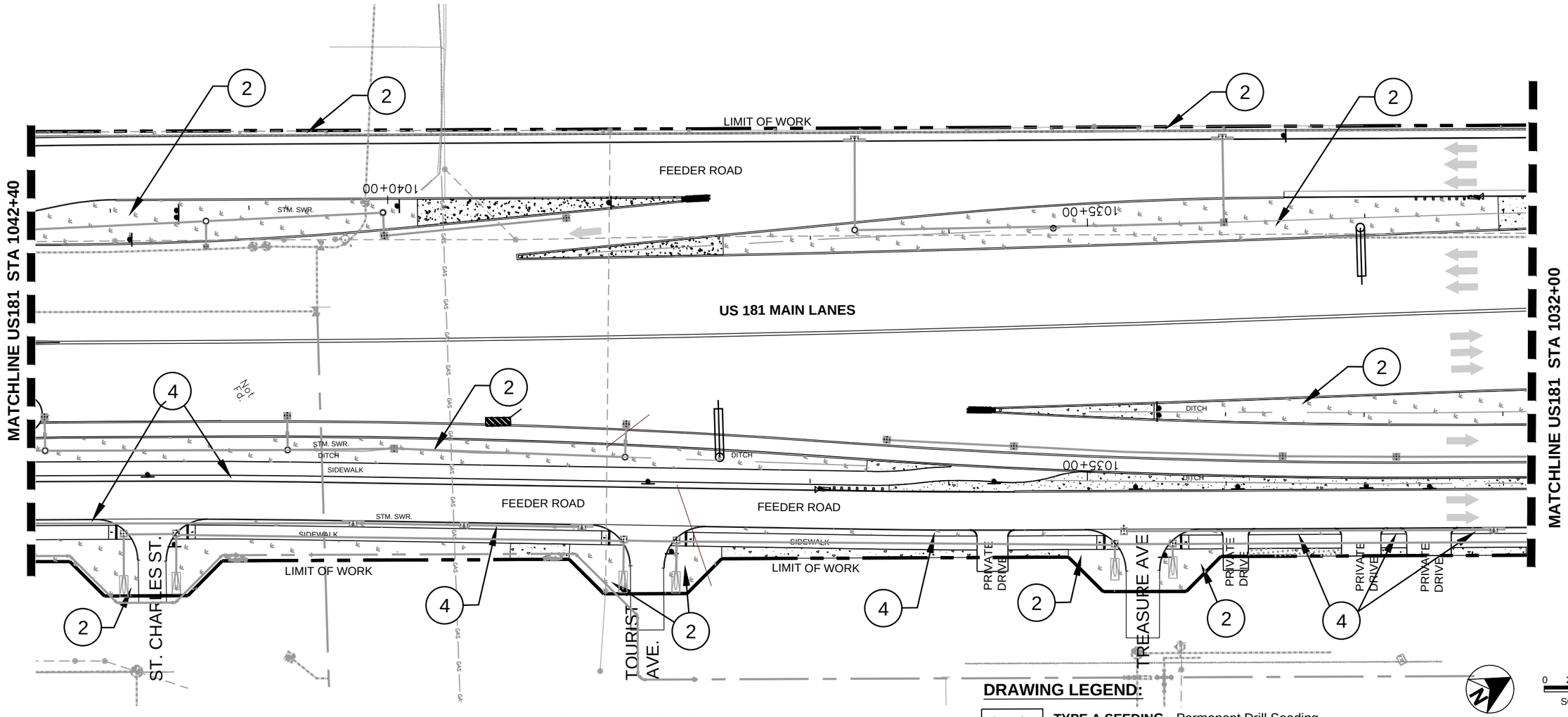

0 20 40 80
SCALE 1" = 80'

DRAWING LEGEND:

TYPE A SEEDING - Permanent Drill Seeding (0164-6066) with Straw Mulch Cover (0162-6033)

TYPE B SEEDING - Permanent Cellulose Fiber Mulch Seeding (0164-6057)

CONCRETE RIPRAP - See Civil Engineering Drawings

GENERAL NOTES:

1. SEE LANDSCAPE GENERAL NOTES SHEET 1 OF 1 FOR ADDITIONAL INFORMATION

DETAIL NOTES:

1. NOT USED
2. TYPE A SEEDING, **SEE FERTILIZER, SEED, SOD, STRAW, COMPOST AND WATER, SHEET 1 OF 1**
3. TYPE B SEEDING, **SEE FERTILIZER, SEED, SOD, STRAW, COMPOST AND WATER, SHEET 1 OF 1**
4. FULL COVERAGE TYPE A SEEDING BETWEEN SIDEWALK AND ROADWAY CURB
5. 4" MULCH TOP DRESSING

DRAWING LEGEND:

T1
3

PLANT MATERIAL SYMBOL

QUANTITY

SHEET QUANTITIES - PLANTING

ITEM	DESCRIPTION	UNIT	QNTY.
0161-6012	GENERAL USE COMPOST	CY	161
0168-6001	VEGETATIVE WATERING	MG	120.0
0164-6066	DRILL SEEDING (PERM) (WARM, COOL)	SY	5800
0164-6057	CELL FBR MLCH SEED(PERM)(SPECIAL MIX)	SY	0
0166-6001	FERTILIZER	AC	4.0
0192-6012	MULCH	CY	0
-	NOT USED	-	-
0192-6004	PLANT MATERIAL (3 GALLON)	EA	0
0192-6026	PLANT MATERIAL (65 GALLON)	EA	0
0192-6063	PLANT BED PREP (TYPE I)	SY	0
0192-6003	STRAW OR HAY MULCH	SY	5800
0192-6065	PLANT BED PREP (TYPE III)	SY	0
0192-6066	PLANT BED PREP (TYPE IV)	SY	5800
1006-6001	LANDSCAPE SOIL AMENDMENT (TYPE I)	EA	0
1006-6002	LANDSCAPE SOIL AMENDMENT (TYPE II)	SY	5800
1006-6003	LANDSCAPE SOIL AMENDMENT (TYPE III)	SY	0
1006-6004	LANDSCAPE SOIL AMENDMENT (TYPE IV)	SY	0

BASE LANDSCAPE COMMITMENT

TYPE A/B SEEDING
0 SHRUBS/ORNAMENTAL GRASSES
0 TREES

STATE OF TEXAS
MICHAEL P. MAUER
1510
REGISTERED LANDSCAPE ARCHITECT
April 6, 2021

FLATIRON/DRAGADOS LLC

M2L Associates Inc.
Houston, Texas 77024
T: 713-722-8897 F: 713-722-8048
Landscape Architecture • Land Planning • Urban Design

Texas Department of Transportation ® 2016

US 181 HARBOR BRIDGE

PLANTING PLAN

US 181
(STA 1042+40 -1032+00)

SHEET 10 OF 12

DESIGN	FED.RD. DIV.NO.	FEDERAL AID PROJECT NO.		HIGHWAY NO.
GRAPHICS	X	(See Title Sheet)		
	STATE	DISTRICT	COUNTY	SHEET NO.
CHECK	TEXAS	CRP	NUECES	B310
CHECK	CONTROL	SECTION	JOB	
	0101	06	095	81

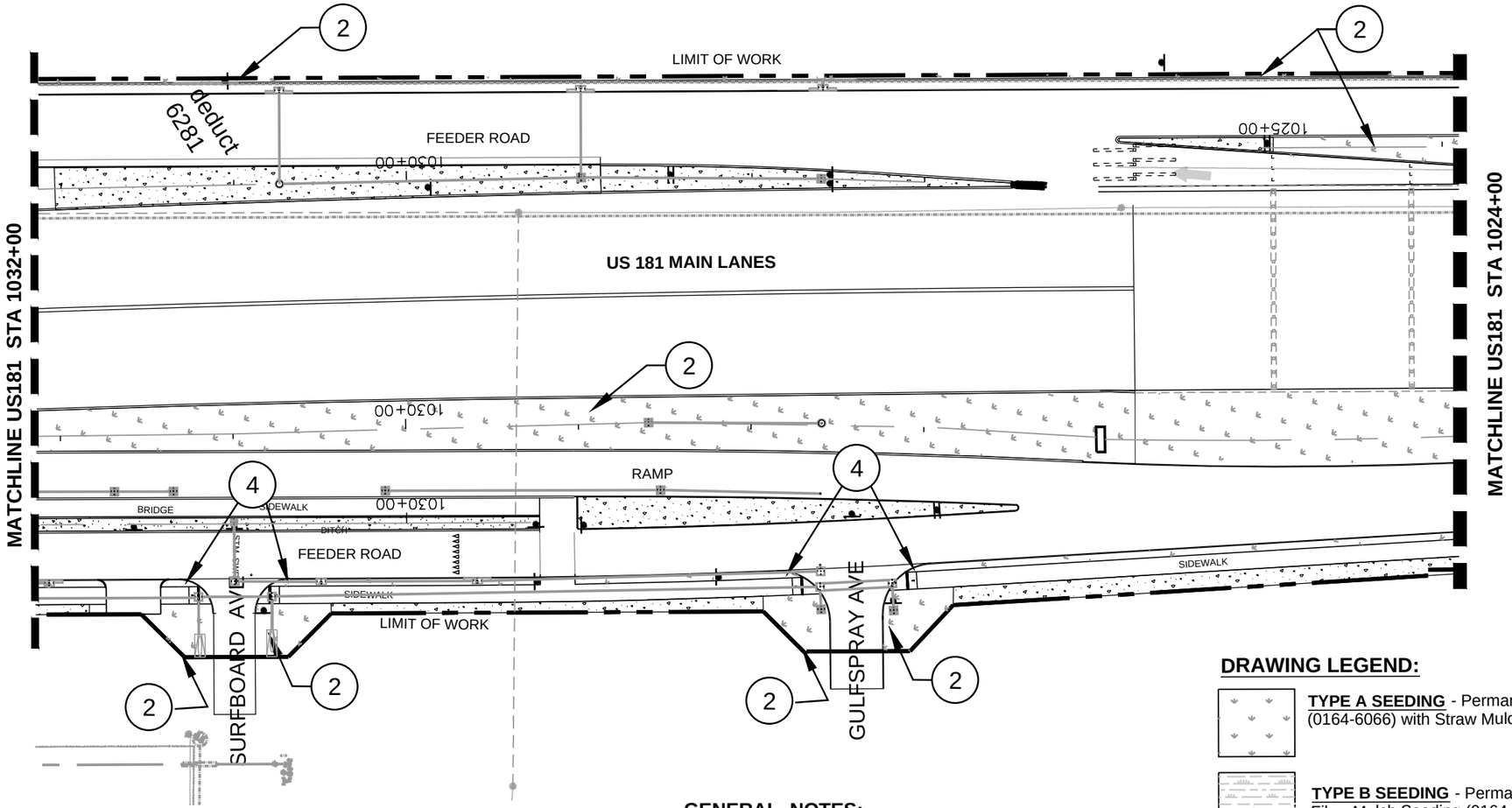

DETAIL NOTES:

1. NOT USED
2. TYPE A SEEDING, **SEE FERTILIZER, SEED, SOD, STRAW, COMPOST AND WATER, SHEET 1 OF 1**
3. TYPE B SEEDING, **SEE FERTILIZER, SEED, SOD, STRAW, COMPOST AND WATER, SHEET 1 OF 1**
4. FULL COVERAGE TYPE A SEEDING BETWEEN SIDEWALK AND ROADWAY CURB
5. 4" MULCH TOP DRESSING

DRAWING LEGEND:

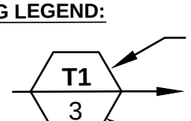

PLANT MATERIAL SYMBOL

QUANTITY

GENERAL NOTES:

1. SEE LANDSCAPE GENERAL NOTES SHEET 1 OF 1 FOR ADDITIONAL INFORMATION

SHEET QUANTITIES - PLANTING

ITEM	DESCRIPTION	UNIT	QNTY.
0161-6012	GENERAL USE COMPOST	CY	131
0168-6001	VEGETATIVE WATERING	MG	98.5
0164-6066	DRILL SEEDING (PERM) (WARM, COOL)	SY	4750
0164-6057	CELL FBR MLCH SEED(PERM)(SPECIAL MIX)	SY	0
0166-6001	FERTILIZER	AC	2.9
0192-6012	MULCH	CY	0
-	NOT USED	-	-
0192-6004	PLANT MATERIAL (3 GALLON)	EA	0
0192-6026	PLANT MATERIAL (65 GALLON)	EA	0
0192-6063	PLANT BED PREP (TYPE I)	SY	0
0192-6003	STRAW OR HAY MULCH	SY	4750
0192-6065	PLANT BED PREP (TYPE III)	SY	0
0192-6066	PLANT BED PREP (TYPE IV)	SY	4750
1006-6001	LANDSCAPE SOIL AMENDMENT (TYPE I)	EA	0
1006-6002	LANDSCAPE SOIL AMENDMENT (TYPE II)	SY	4750
1006-6003	LANDSCAPE SOIL AMENDMENT (TYPE III)	SY	0
1006-6004	LANDSCAPE SOIL AMENDMENT (TYPE IV)	SY	0

DRAWING LEGEND:

TYPE A SEEDING - Permanent Drill Seeding (0164-6066) with Straw Mulch Cover (0162-6033)

TYPE B SEEDING - Permanent Cellulose Fiber Mulch Seeding (0164-6057)

CONCRETE RIPRAP - See Civil Engineering Drawings

BASE LANDSCAPE COMMITMENT

TYPE A/B SEEDING
0 SHRUBS/ORNAMENTAL GRASSES
0 TREES

0 20 40 80
SCALE 1" = 80'

STATE OF TEXAS
MICHAEL P. MAUER
1510
REGISTERED
LANDSCAPE ARCHITECT
April 6, 2021

FLATIRON/DRAGADOS LLC

M2L Associates Inc.
Houston, Texas 77024
T: 713-722-8897 F: 713-722-8048
Landscape Architecture • Land Planning • Urban Design

Texas Department of Transportation 2016

US 181 HARBOR BRIDGE

PLANTING PLAN

US 181
(STA 1032+00 -1024+00)

SHEET 11 OF 12

DESIGN	FED.RD. DIV.NO.	FEDERAL AID PROJECT NO.		HIGHWAY NO.
GRAPHICS	X	(See Title Sheet)		
	STATE	DISTRICT	COUNTY	SHEET NO.
CHECK	TEXAS	CRP	NUECES	B311
CHECK	CONTROL	SECTION	JOB	
	0101	06	095	82

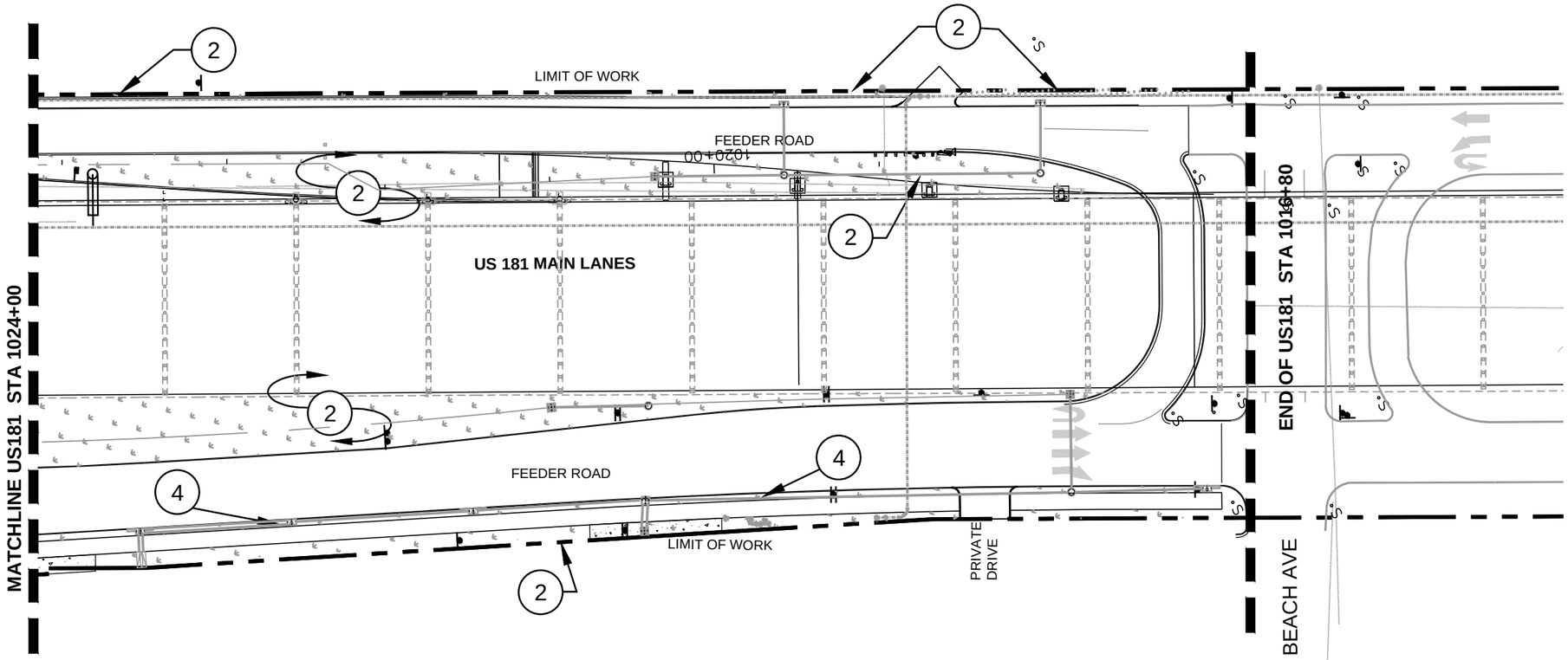

DRAWING LEGEND:

TYPE A SEEDING - Permanent Drill Seeding (0164-6066) with Straw Mulch Cover (0162-6033)

TYPE B SEEDING - Permanent Cellulose Fiber Mulch Seeding (0164-6057)

CONCRETE RIPRAP - See Civil Engineering Drawings

0 20 40 80
SCALE 1" = 80'

DETAIL NOTES:

1. NOT USED
2. TYPE A SEEDING, **SEE FERTILIZER, SEED, SOD, STRAW, COMPOST AND WATER, SHEET 1 OF 1**
3. TYPE B SEEDING, **SEE FERTILIZER, SEED, SOD, STRAW, COMPOST AND WATER, SHEET 1 OF 1**
4. FULL COVERAGE TYPE A SEEDING BETWEEN SIDEWALK AND ROADWAY CURB
5. 4" MULCH TOP DRESSING

GENERAL NOTES:

1. SEE LANDSCAPE GENERAL NOTES SHEET 1 OF 1 FOR ADDITIONAL INFORMATION

SHEET QUANTITIES - PLANTING

ITEM	DESCRIPTION	UNIT	QNTY.
0161-6012	GENERAL USE COMPOST	CY	122
0168-6001	VEGETATIVE WATERING	MG	109.2
0164-6066	DRILL SEEDING (PERM) (WARM, COOL)	SY	4406
0164-6057	CELL FBR MLCH SEED(PERM)(SPECIAL MIX)	SY	0
0166-6001	FERTILIZER	AC	2.8
0192-6012	MULCH	CY	0
-	NOT USED	-	-
0192-6004	PLANT MATERIAL (3 GALLON)	EA	0
0192-6026	PLANT MATERIAL (65 GALLON)	EA	0
0192-6063	PLANT BED PREP (TYPE I)	SY	0
0192-6003	STRAW OR HAY MULCH	SY	4406
0192-6065	PLANT BED PREP (TYPE III)	SY	0
0192-6066	PLANT BED PREP (TYPE IV)	SY	4406
1006-6001	LANDSCAPE SOIL AMENDMENT (TYPE I)	EA	0
1006-6002	LANDSCAPE SOIL AMENDMENT (TYPE II)	SY	4406
1006-6003	LANDSCAPE SOIL AMENDMENT (TYPE III)	SY	0
1006-6004	LANDSCAPE SOIL AMENDMENT (TYPE IV)	SY	0

BASE LANDSCAPE COMMITMENT

TYPE A/B SEEDING
0 SHRUBS/ORNAMENTAL GRASSES
0 TREES

DRAWING LEGEND:

T1
3

PLANT MATERIAL SYMBOL

QUANTITY

STATE OF TEXAS
MICHAEL P. MAUER
1510
REGISTERED LANDSCAPE ARCHITECT
April 6, 2021

FLATIRON/DRAGADOS LLC

M2L Associates Inc.
Houston, Texas 77024
T: 713-722-8897 F: 713-722-8048
Landscape Architecture • Land Planning • Urban Design

Texas Department of Transportation ® 2016

US 181 HARBOR BRIDGE

PLANTING PLAN

US 181
(STA 1024+00 -1016+80)

SHEET 12 OF 12

DESIGN	FED.RD. DIV.NO.	FEDERAL AID PROJECT NO.		HIGHWAY NO.
GRAPHICS	X	(See Title Sheet)		
	STATE	DISTRICT	COUNTY	SHEET NO.
CHECK	TEXAS	CRP	NUECES	B312
CHECK	CONTROL	SECTION	JOB	
	0101	06	095	83

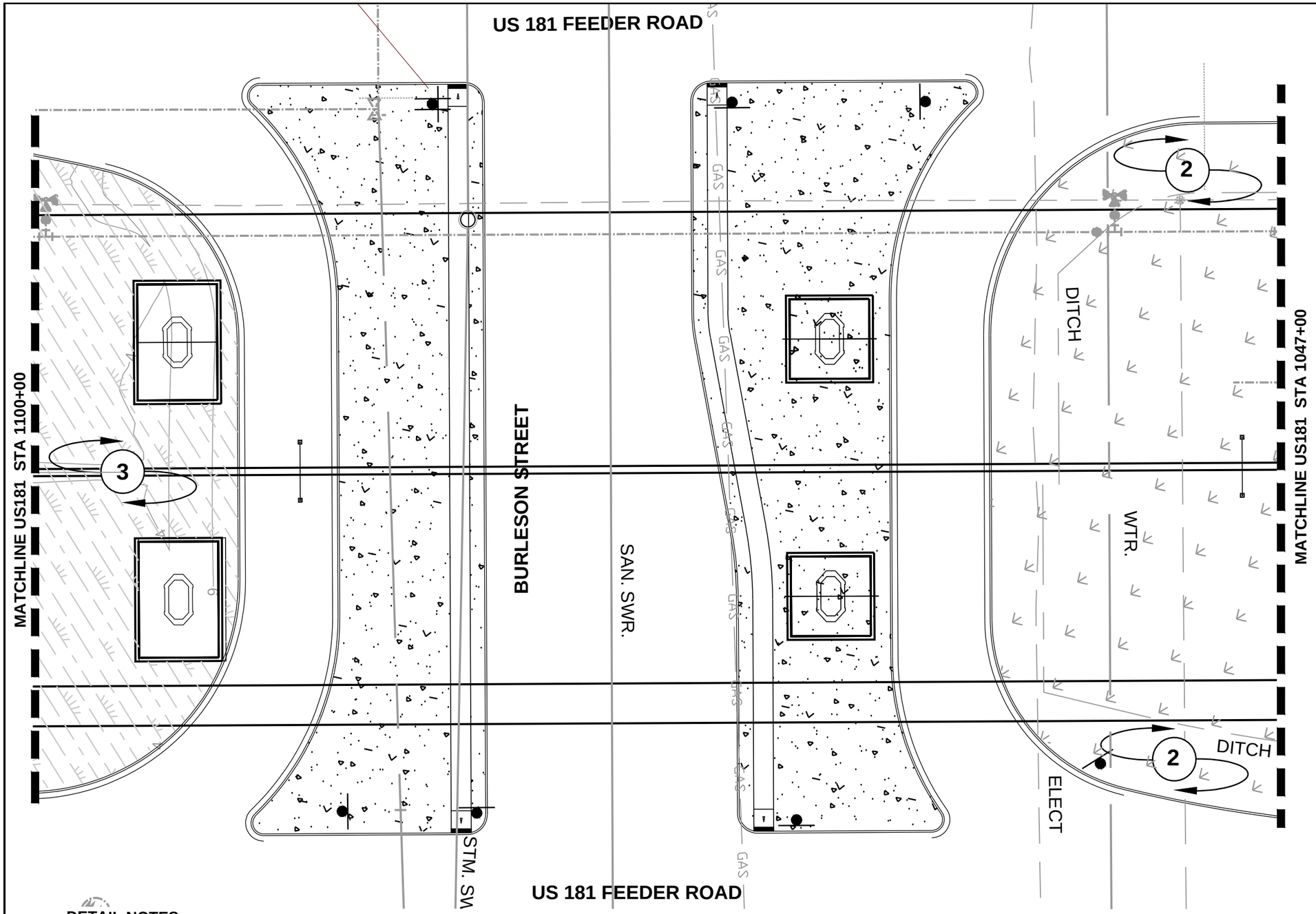

DRAWING LEGEND:

TYPE A SEEDING - Permanent Drill Seeding (0164-6066) with Straw Mulch Cover (0162-6033)

TYPE B SEEDING - Permanent Cellulose Fiber Mulch Seeding (0164-6057)

CONCRETE RIPRAP - See Civil Engineering Drawings

GENERAL NOTES:

1. SEE LANDSCAPE GENERAL NOTES SHEET 1 OF 1 FOR ADDITIONAL INFORMATION

0 5 15 30

SCALE 1" = 30'

DETAIL NOTES:

1. NOT USED
2. TYPE A SEEDING, **SEE FERTILIZER, SEE SOD SEE STRAW, AND WATER, SHEET 1 OF 1**
3. TYPE B SEEDING, **SEE FERTILIZER, SEE SOD SEE STRAW, AND WATER, SHEET 1 OF 1**
4. 4" MULCH TOP DRESSING

DRAWING LEGEND:

T1 / 3

PLANT MATERIAL SYMBOL

QUANTITY

STATE OF TEXAS
MICHAEL P. MAUER
1510
REGISTERED LANDSCAPE ARCHITECT
April 6, 2021

FLATIRON/DRAGADOS LLC

M2L Associates Inc.
Houston, Texas 77024
T: 713-722-8897 F: 713-722-8048
Landscape Architecture • Land Planning • Urban Design

Texas Department of Transportation ® 2016

US 181 HARBOR BRIDGE

ENLARGED PLANTING PLAN BURLESON ST.

US 181
(STA 1047+00 -1100+00)

SHEET 12 OF 12

DESIGN	FED.RD. DIV.NO.	FEDERAL AID PROJECT NO.		HIGHWAY NO.
GRAPHICS	X	(See Title Sheet)		
	STATE	DISTRICT	COUNTY	SHEET NO.
CHECK	TEXAS	CRP	NUECES	B313
CHECK	CONTROL	SECTION	JOB	
	0101	06	095	84

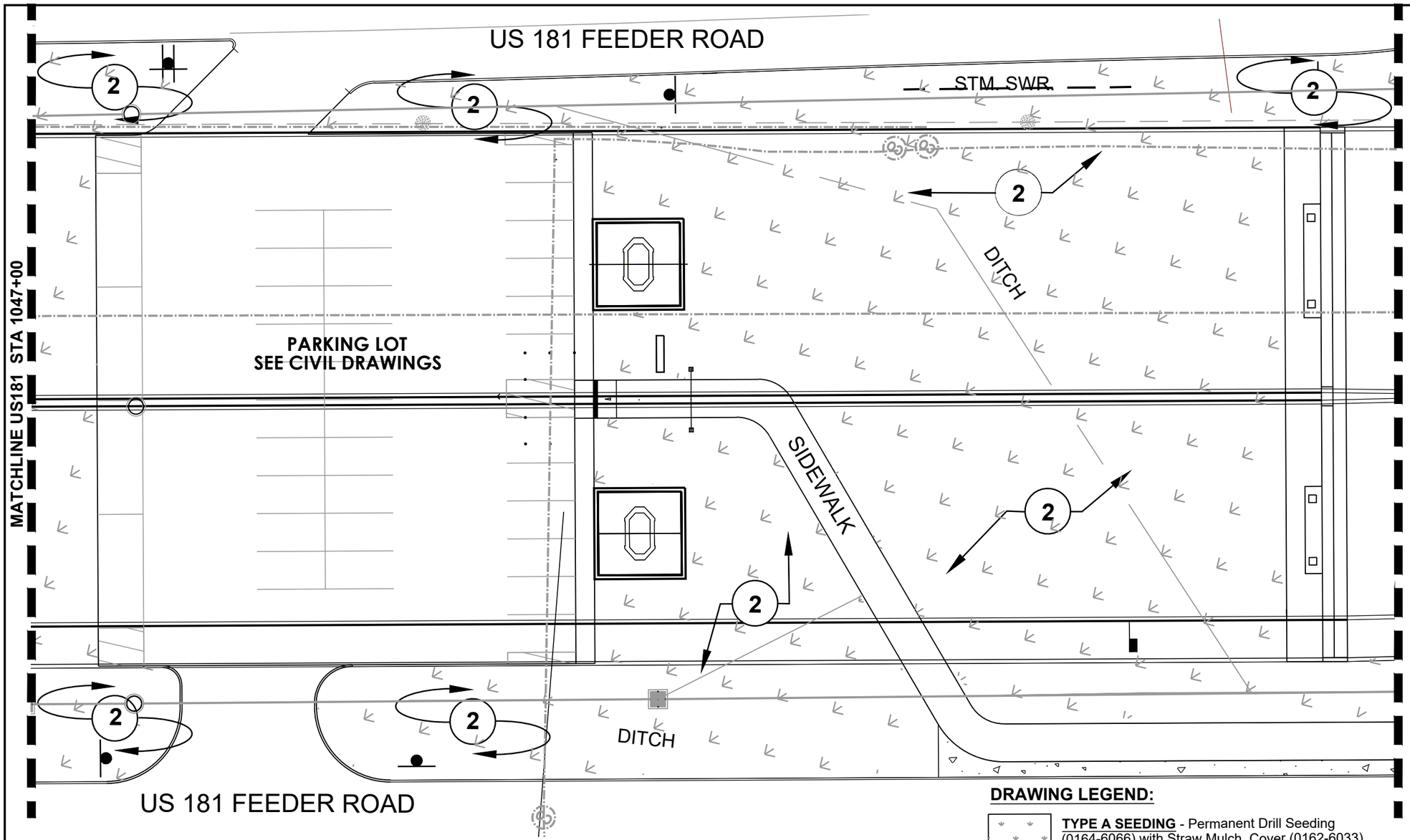

DRAWING LEGEND:

T1 / 3 — PLANT MATERIAL SYMBOL; QUANTITY

0 5 15 30
SCALE 1" = 30'

DRAWING LEGEND:

TYPE A SEEDING - Permanent Drill Seeding (0164-6066) with Straw Mulch Cover (0162-6033)

TYPE B SEEDING - Permanent Cellulose Fiber Mulch Seeding (0164-6057)

CONCRETE RIPRAP - See Civil Engineering Drawings

DETAIL NOTES:

1. NOT USED
2. TYPE A SEEDING, **SEE FERTILIZER, SEE SOD SEE STRAW, AND WATER, SHEET 1 OF 1**
3. TYPE B SEEDING, **SEE FERTILIZER, SEE SOD SEE STRAW, AND WATER, SHEET 1 OF 1**
4. 4" MULCH TOP DRESSING

GENERAL NOTES:

1. SEE LANDSCAPE GENERAL NOTES SHEET 1 OF 1 FOR ADDITIONAL INFORMATION

STATE OF TEXAS
MICHAEL P. MAUER
1510
REGISTERED LANDSCAPE ARCHITECT
SEP 9, 2022

FLATIRON/DRAGADOS LLC

M2L Associates Inc.
Houston, Texas 77024
T: 713-722-8897 F: 713-722-8048
•Landscape Architecture•
•Land Planning•Urban Design•

Texas Department of Transportation ©2016

US 181 HARBOR BRIDGE

ENLARGED PLANTING PLAN NORTH BEACH PARK

US 181

(STA 1042+80 -1047+40)

SHEET 12 OF 12

DESIGN	FED.RD. DIV.NO.	FEDERAL AID PROJECT NO.		HIGHWAY NO.
GRAPHICS	X	(See Title Sheet)		
	STATE	DISTRICT	COUNTY	SHEET NO.
CHECK	TEXAS	CRP	NUECES	B314
CHECK	CONTROL	SECTION	JOB	
	0101	06	095	85

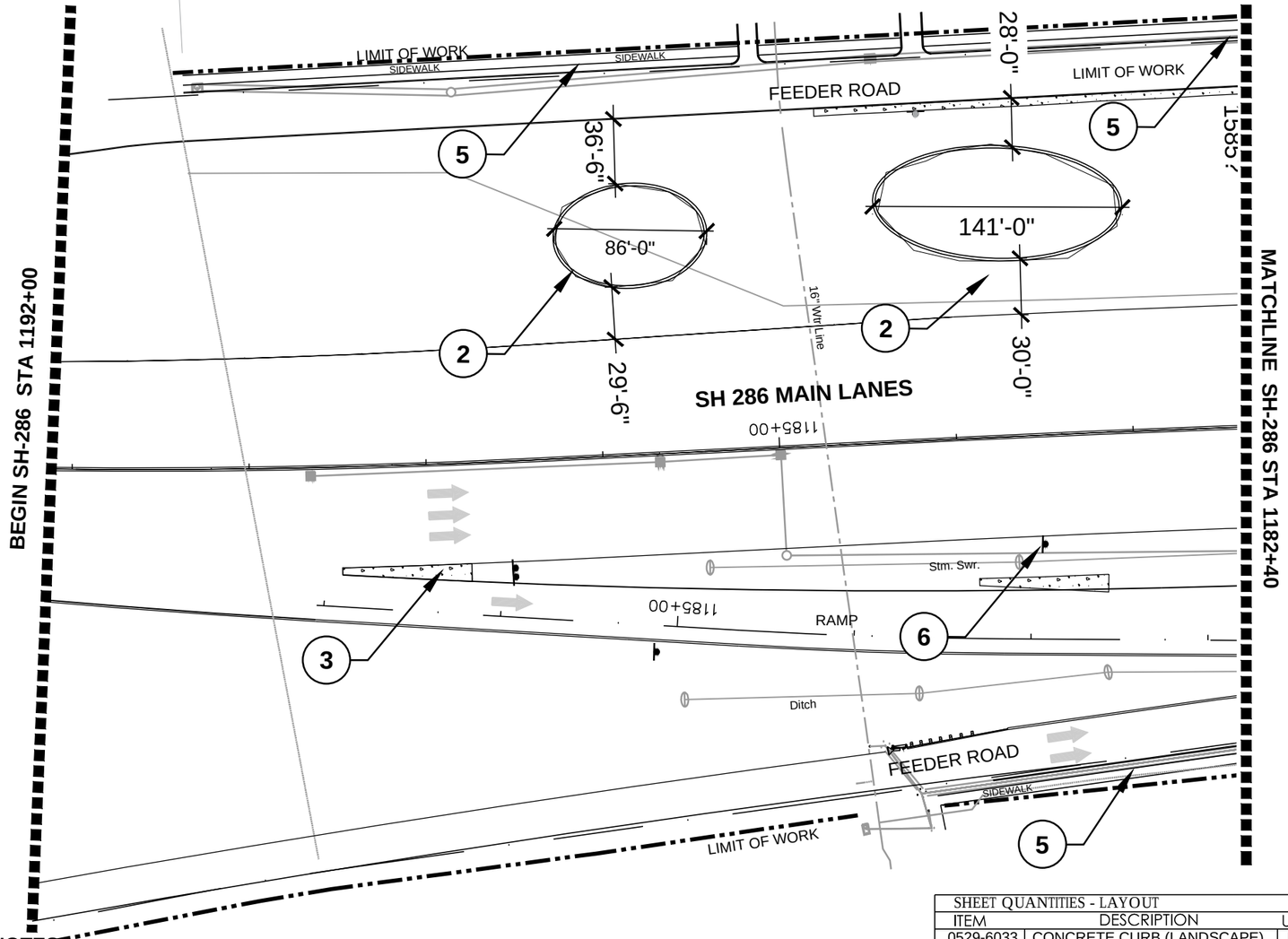

GENERAL NOTES:

1. SEE LANDSCAPE GENERAL NOTES SHEET 1 OF 1 FOR ADDITIONAL INFORMATION

DRAWING LEGEND:

3 — DETAIL REFERENCE

0 20 40 80
SCALE 1" = 80'

DETAIL NOTES:

1. **NOT USED**
2. CONCRETE LANDSCAPE CURBING, **SEE CONSTRUCTION DETAILS SHEET 3 OF 10**
3. CONCRETE RIP RAP, **SEE CIVIL ENGINEERING DRAWINGS**
4. ACCESS RAMP, **SEE SITE CIVIL ENGINEERING DRAWINGS**
5. SIDEWALK, **SEE SITE CIVIL ENGINEERING DRAWINGS**
6. PROPOSED STREETSIGNS - TYP

SHEET QUANTITIES - LAYOUT

ITEM	DESCRIPTION	UNIT	QNTY.
0529-6033	CONCRETE CURB (LANDSCAPE)	LF	530

STATE OF TEXAS
MICHAEL P. MAUER
1510
REGISTERED LANDSCAPE ARCHITECT
April 6, 2021

FLATIRON/DRAGADOS LLC

M2L Associates Inc.
Houston, Texas 77024
T: 713-722-8897 F: 713-722-8048
Landscape Architecture
Land Planning Urban Design

Texas Department of Transportation 2016

US 181 HARBOR BRIDGE

LAYOUT PLAN

SH 286
(STA 1192+00 -1182+40)

SHEET 1 OF 4

DESIGN	FED.RD. DIV.NO.	FEDERAL AID PROJECT NO.		HIGHWAY NO.
GRAPHICS	X	(See Title Sheet)		
	STATE	DISTRICT	COUNTY	SHEET NO.
CHECK	TEXAS	CRP	NUECES	C101
	CONTROL	SECTION	JOB	
CHECK	0101	06	095	86

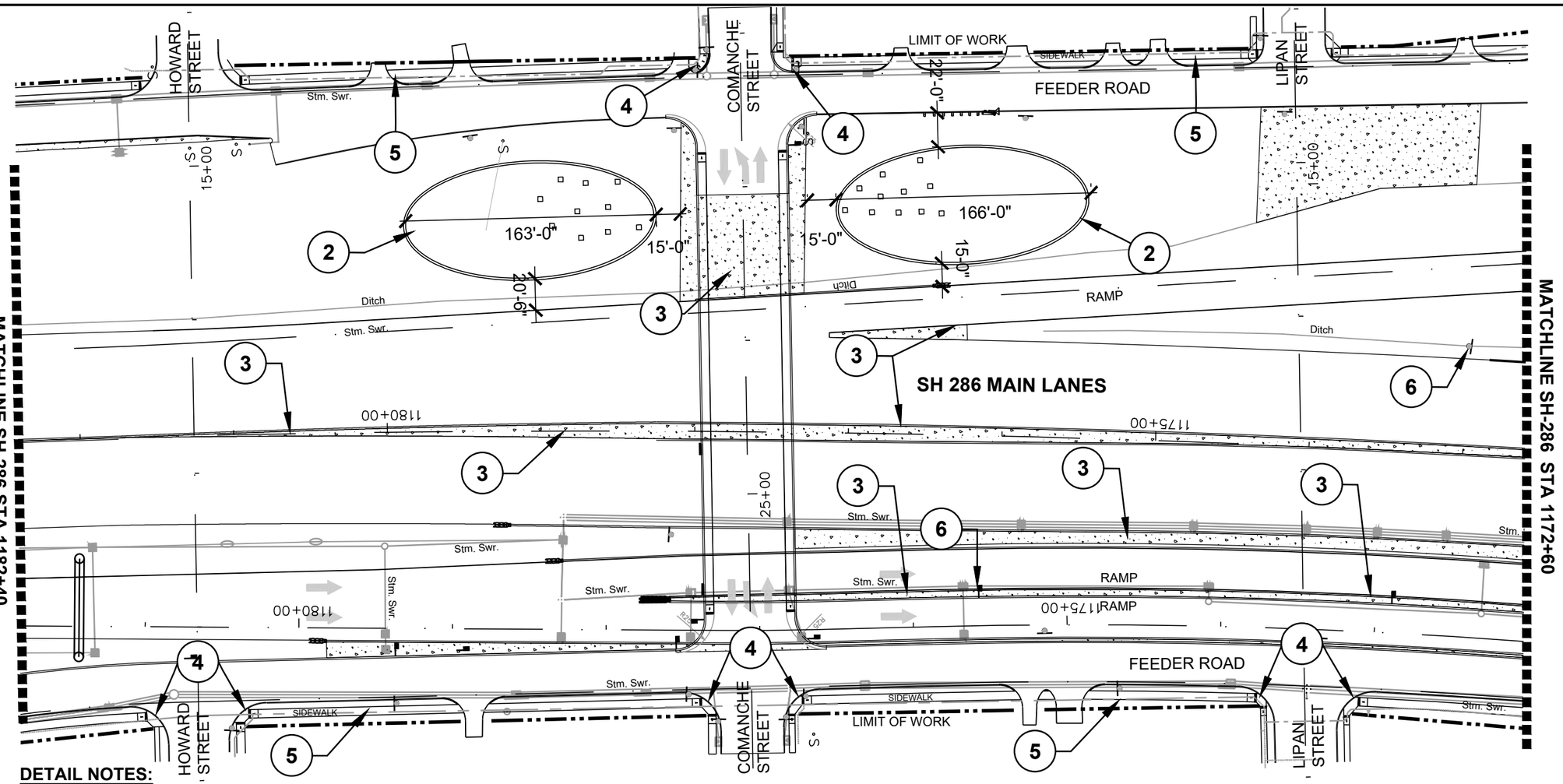

0 20 40 80
SCALE 1" = 80'

DETAIL NOTES:

1. **NOT USED**
2. CONCRETE LANDSCAPE CURBING, **SEE CONSTRUCTION DETAILS SHEET 3 OF 10**
3. CONCRETE RIP RAP, **SEE CIVIL ENGINEERING DRAWINGS**
4. ACCESS RAMP, **SEE SITE CIVIL ENGINEERING DRAWINGS**
5. SIDEWALK, **SEE SITE CIVIL ENGINEERING DRAWINGS**
6. PROPOSED STREETSIGNS - TYP

SHEET QUANTITIES - LAYOUT

ITEM	DESCRIPTION	UNIT	QNTY.
0529-6033	CONCRETE CURB (LANDSCAPE)	LF	770

GENERAL NOTES:

1. SEE LANDSCAPE GENERAL NOTES SHEET 1 OF 1 FOR ADDITIONAL INFORMATION

DRAWING LEGEND:

3 — DETAIL REFERENCE

STATE OF TEXAS
MICHAEL P. MAUER
1510
REGISTERED LANDSCAPE ARCHITECT
SEP 9, 2022

FLATIRON/DRAGADOS LLC

M2L Associates Inc.
Houston, Texas 77024
T: 713-722-8897 F: 713-722-8048
Landscape Architecture
Land Planning Urban Design

Texas Department of Transportation ® 2016

US 181 HARBOR BRIDGE

LAYOUT PLAN

SH 286
(STA 1182+40 -1172+60)

SHEET 2 OF 4

DESIGN	FED.RD. DIV.NO.	FEDERAL AID PROJECT NO.		HIGHWAY NO.
GRAPHICS	X	(See Title Sheet)		
	STATE	DISTRICT	COUNTY	SHEET NO.
CHECK	TEXAS	CRP	NUECES	C102
CHECK	CONTROL	SECTION	JOB	87
	0101	06	095	

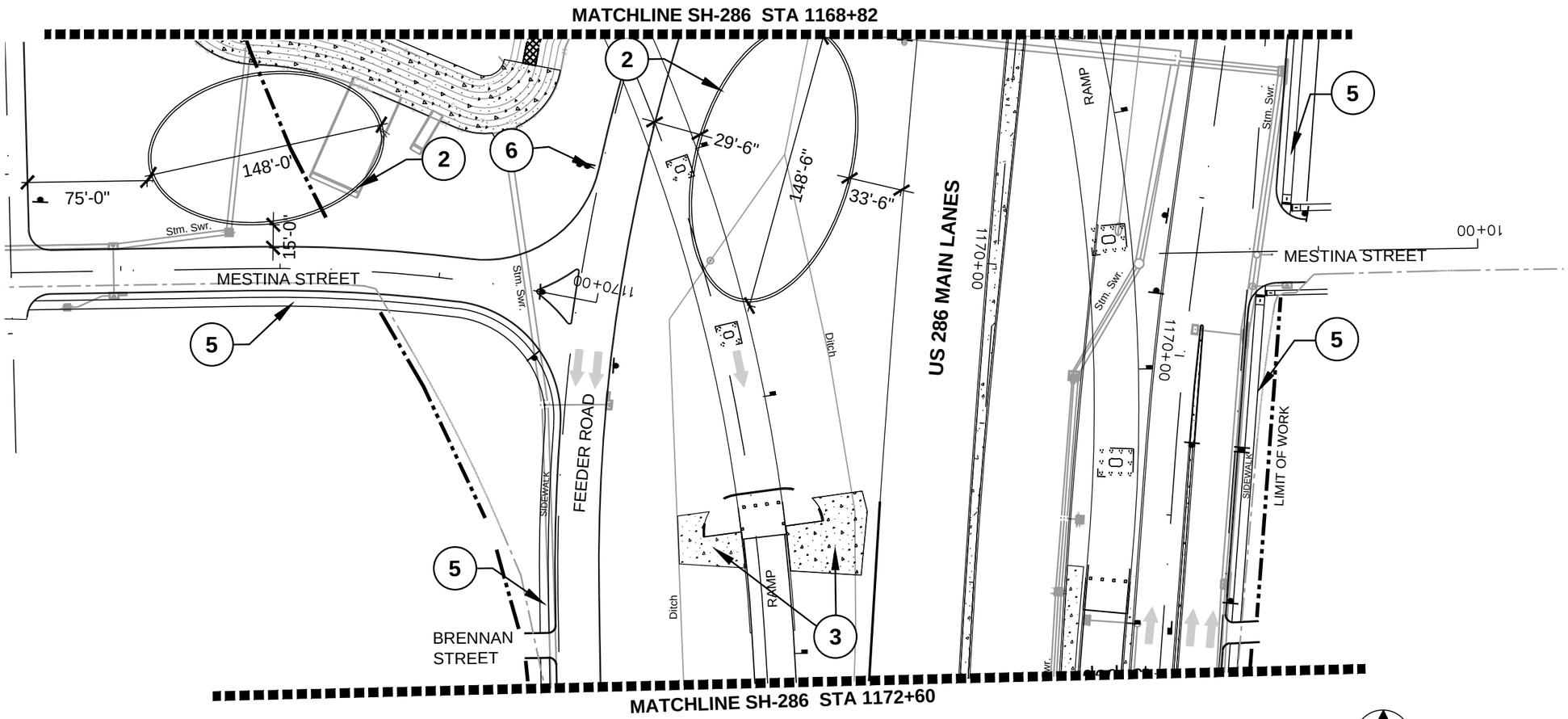

DRAWING LEGEND:

3 — DETAIL REFERENCE

DETAIL NOTES:

1. **NOT USED**
2. CONCRETE LANDSCAPE CURBING, **SEE CONSTRUCTION DETAILS SHEET 3 OF 10**
3. CONCRETE RIP RAP, **SEE CIVIL ENGINEERING DRAWINGS**
4. ACCESS RAMP, **SEE SITE CIVIL ENGINEERING DRAWINGS**
5. SIDEWALK, **SEE SITE CIVIL ENGINEERING DRAWINGS**
6. PROPOSED STREETSIGNS - TYP

SHEET QUANTITIES - LAYOUT

ITEM	DESCRIPTION	UNIT	QNTY.
0529-6033	CONCRETE CURB (LANDSCAPE)	LF	820

N

0 20 40 80

SCALE 1" = 80'

GENERAL NOTES:

1. SEE LANDSCAPE GENERAL NOTES SHEET 1 OF 1 FOR ADDITIONAL INFORMATION

STATE OF TEXAS
MICHAEL P. MAUER
1510
REGISTERED LANDSCAPE ARCHITECT
April 6, 2021

FLATIRON/DRAGADOS LLC

M2L Associates Inc.
Houston, Texas 77024
T: 713-722-8897 F: 713-722-8048
Landscape Architecture • Land Planning • Urban Design

Texas Department of Transportation ® 2016

US 181 HARBOR BRIDGE

LAYOUT PLAN

SH 286
(STA 1172+60 -1168+82)

SHEET 3 OF 4

DESIGN	FED.RD. DIV.NO.	FEDERAL AID PROJECT NO.		HIGHWAY NO.
GRAPHICS	X	(See Title Sheet)		
	STATE	DISTRICT	COUNTY	SHEET NO.
CHECK	TEXAS	CRP	NUECES	C103
	CONTROL	SECTION	JOB	
CHECK	0101	06	095	88

SH-286 STA 1165+98 (SEE I-37 STA 132+00 - 122+00)

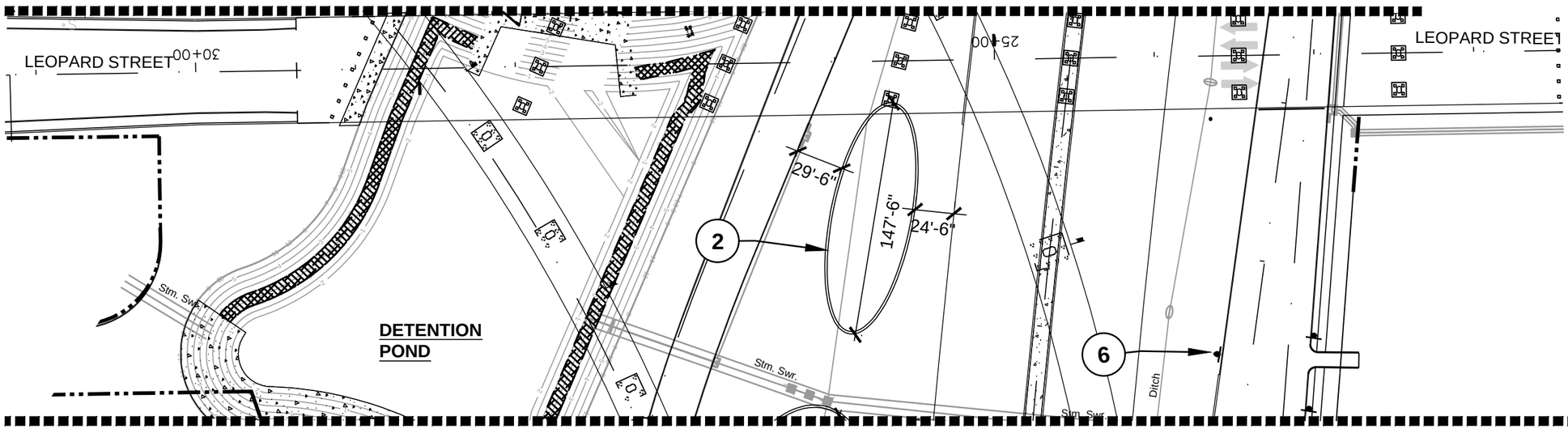

DRAWING LEGEND:

3 — DETAIL REFERENCE

N

0 20 40 80
SCALE 1" = 80'

SHEET QUANTITIES - LAYOUT			
ITEM	DESCRIPTION	UNIT	QNTY.
0529-6033	CONCRETE CURB (LANDSCAPE)	LF	325

DETAIL NOTES:

1. **NOT USED**
2. CONCRETE LANDSCAPE CURBING, **SEE CONSTRUCTION DETAILS SHEET 3 OF 10**
3. CONCRETE RIP RAP, **SEE CIVIL ENGINEERING DRAWINGS**
4. ACCESS RAMP, **SEE SITE CIVIL ENGINEERING DRAWINGS**
5. SIDEWALK, **SEE SITE CIVIL ENGINEERING DRAWINGS**
6. PROPOSED STREETSIGNS - TYP

GENERAL NOTES:

1. SEE LANDSCAPE GENERAL NOTES SHEET 1 OF 1 FOR ADDITIONAL INFORMATION

STATE OF TEXAS
MICHAEL P. MAUER
1510
REGISTERED
LANDSCAPE ARCHITECT
April 6, 2021

FLATIRON/DRAGADOS LLC

M2L Associates Inc.
Houston, Texas 77024
T: 713-722-8897 F: 713-722-8048
Landscape Architecture • Land Planning • Urban Design

Texas Department of Transportation ® 2016

US 181 HARBOR BRIDGE

LAYOUT PLAN

SH 286
(STA 1168+82 -1165+98)

SHEET 4 OF 4

DESIGN	FED.RD. DIV.NO.	FEDERAL AID PROJECT NO.		HIGHWAY NO.
GRAPHICS	X	(See Title Sheet)		
	STATE	DISTRICT	COUNTY	SHEET NO.
CHECK	TEXAS	CRP	NUECES	C104
CHECK	CONTROL	SECTION	JOB	
	0101	06	095	

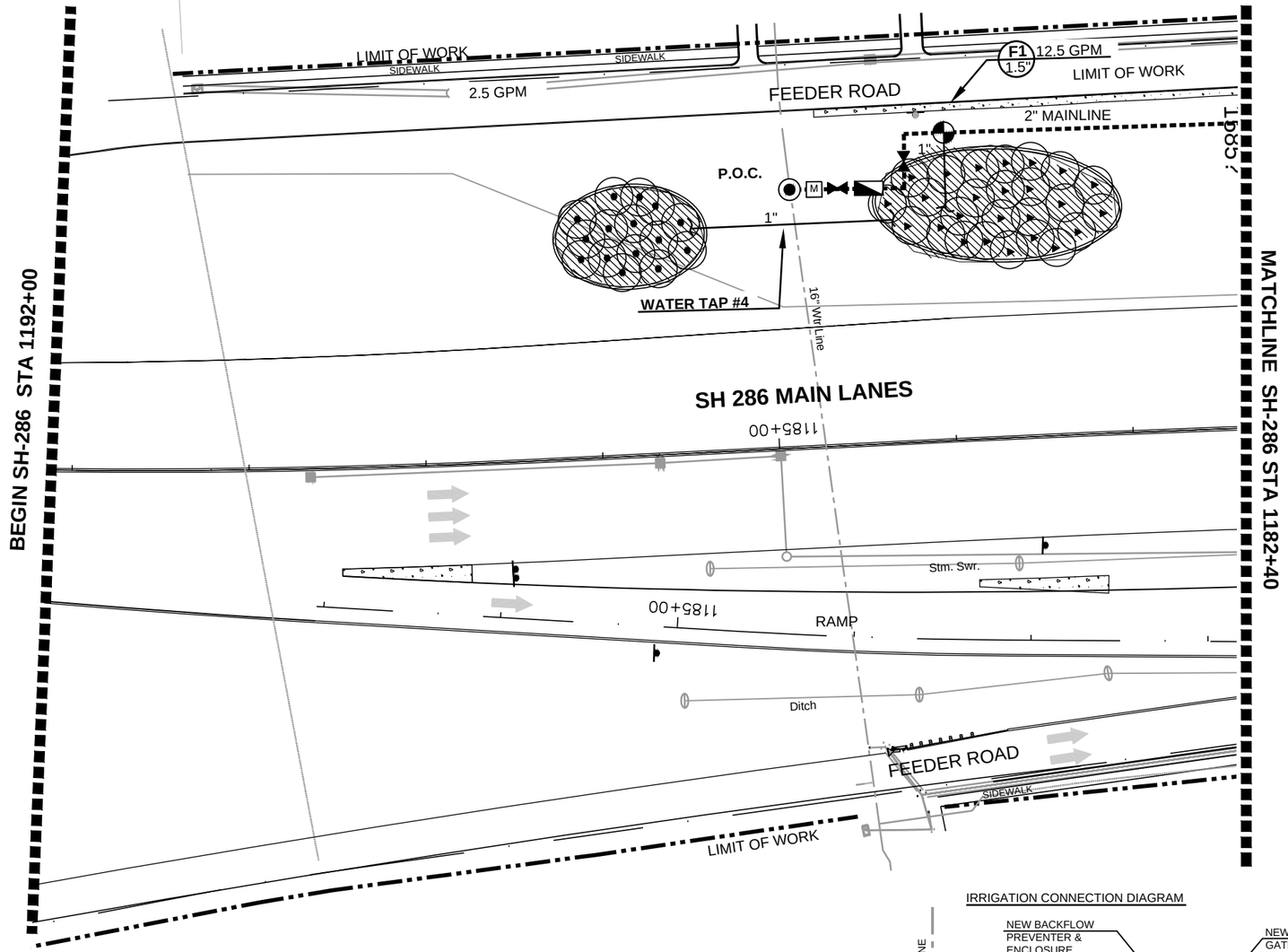

GENERAL NOTES:

1. SEE LANDSCAPE GENERAL NOTES SHEET 1 OF 1 FOR ADDITIONAL INFORMATION
2. SEE IRRIGATION DETAILS SHEETS
3. IRRIGATION SYSTEM PAID FOR UNDER 0170-6002

0 20 40 80
SCALE 1" = 80'

IRRIGATION CONNECTION DIAGRAM

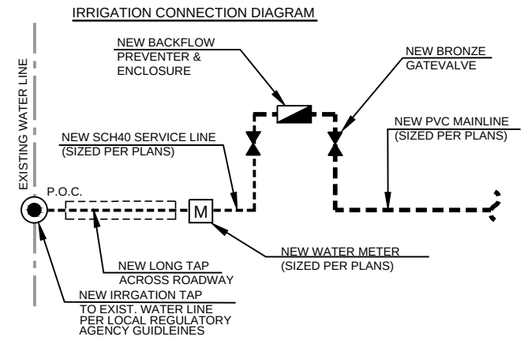

IRRIGATION LEGEND

- CLASS 315 LATERAL
- SCH-40 PVC MAINLINE
- 1 6" SCH-40 PVC SLEEVE/BORE
- 2 4" SCH-40 PVC SLEEVE/BORE
- TREE DRIP SYSTEM
- SHRUB GROUND COVER DRIP SYSTEM
- HUNTER ICV SERIES VALVE(SIZE AS NOTED)
- GATE VALVE
- POINT OF CONNECTION, ***SEE DIAGRAM, THIS SHEET***
- C XC HYBRID CONTROLLER
- MS RAIN MOISTURE SENSOR

A2 15.0 GPM
1.0"

- CONTROLLER NUMBER
- ZONE NUMBER
- ZONE GALLONAGE PER MINUTE - ACTUAL
- VALVE SIZE (INCHES)

STATE OF TEXAS
MICHAEL P. MAUER
1510
REGISTERED LANDSCAPE ARCHITECT
April 6, 2021

FLATIRON/DRAGADOS LLC

M2L Associates Inc.
Houston, Texas 77024
T: 713-722-8897 F: 713-722-8048
Landscape Architecture
Land Planning Urban Design

Texas Department of Transportation ® 2016

US 181 HARBOR BRIDGE

IRRIGATION PLAN

SH 286
(STA 1192+00 -1182+40)

SHEET 1 OF 4

DESIGN	FED.RD. DIV.NO.	FEDERAL AID PROJECT NO.		HIGHWAY NO.
	X	(See Title Sheet)		
GRAPHICS	STATE	DISTRICT	COUNTY	SHEET NO.
CHECK	TEXAS	CRP	NUECES	C201
CHECK	CONTROL	SECTION	JOB	
	0101	06	095	90

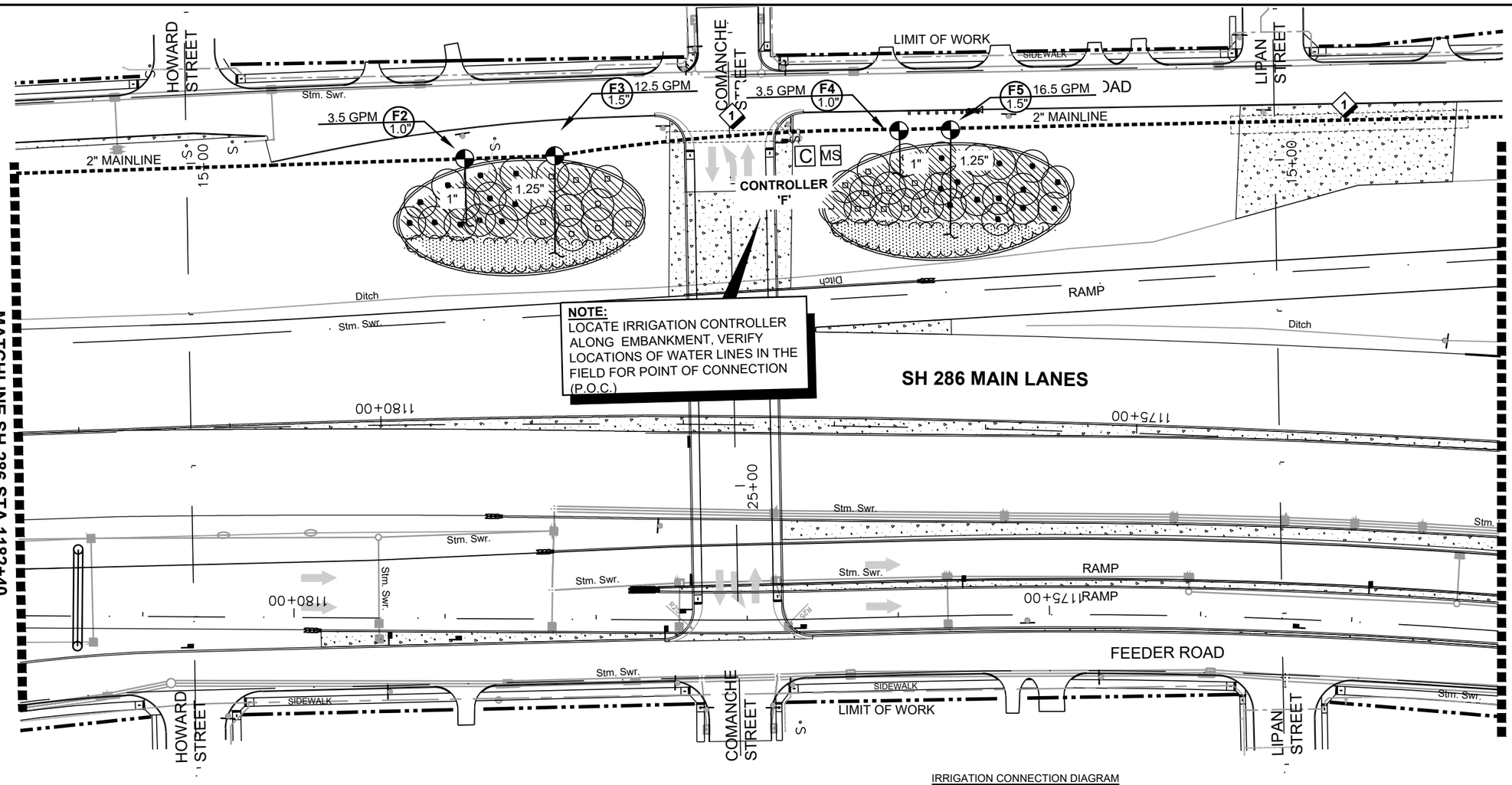

NOTE:
LOCATE IRRIGATION CONTROLLER ALONG EMBANKMENT, VERIFY LOCATIONS OF WATER LINES IN THE FIELD FOR POINT OF CONNECTION (P.O.C.)

0 20 40 80
SCALE 1" = 80'

IRRIGATION CONNECTION DIAGRAM

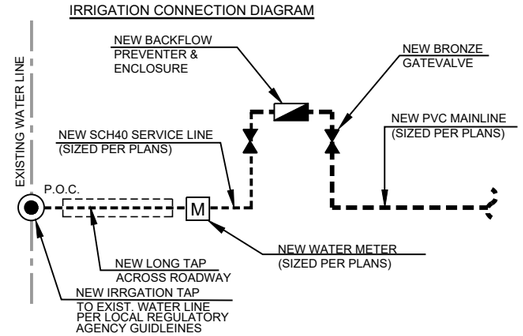

GENERAL NOTES:

1. SEE LANDSCAPE GENERAL NOTES SHEET 1 OF 1 FOR ADDITIONAL INFORMATION
2. SEE IRRIGATION DETAILS SHEETS
3. IRRIGATION SYSTEM PAID FOR UNDER 0170-6002

IRRIGATION LEGEND

- CLASS 315 LATERAL
- SCH-40 PVC MAINLINE
- 1 6" SCH-40 PVC SLEEVE/BORE
- 2 4" SCH-40 PVC SLEEVE/BORE
- TREE DRIP SYSTEM
- SHRUB GROUND COVER DRIP SYSTEM
- HUNTER ICV SERIES VALVE(SIZE AS NOTED)
- GATE VALVE
- POINT OF CONNECTION, ***SEE DIAGRAM, THIS SHEET***
- C XC HYBRID CONTROLLER
- MS RAIN MOISTURE SENSOR

A2 1.0" 15.0 GPM
- CONTROLLER NUMBER
- ZONE NUMBER
- ZONE GALLONAGE PER MINUTE - ACTUAL
- VALVE SIZE (INCHES)

STATE OF TEXAS
MICHAEL P. MAUER
1510
REGISTERED LANDSCAPE ARCHITECT
SEP 9, 2022

FLATIRON/DRAGADOS LLC

M2L Associates Inc.
Houston, Texas 77024
T: 713-722-8897 F: 713-722-8048
Landscape Architecture • Land Planning • Urban Design

Texas Department of Transportation ®2016

US 181 HARBOR BRIDGE

IRRIGATION PLAN

SH 286
(STA 1182+40 -1172+60)

SHEET 2 OF 4

DESIGN	FED. RD. DIV. NO.	FEDERAL AID PROJECT NO.		HIGHWAY NO.
GRAPHICS	X	(See Title Sheet)		
	STATE	DISTRICT	COUNTY	SHEET NO.
CHECK	TEXAS	CRP	NUECES	C202
CHECK	CONTROL	SECTION	JOB	
	0101	06	095	

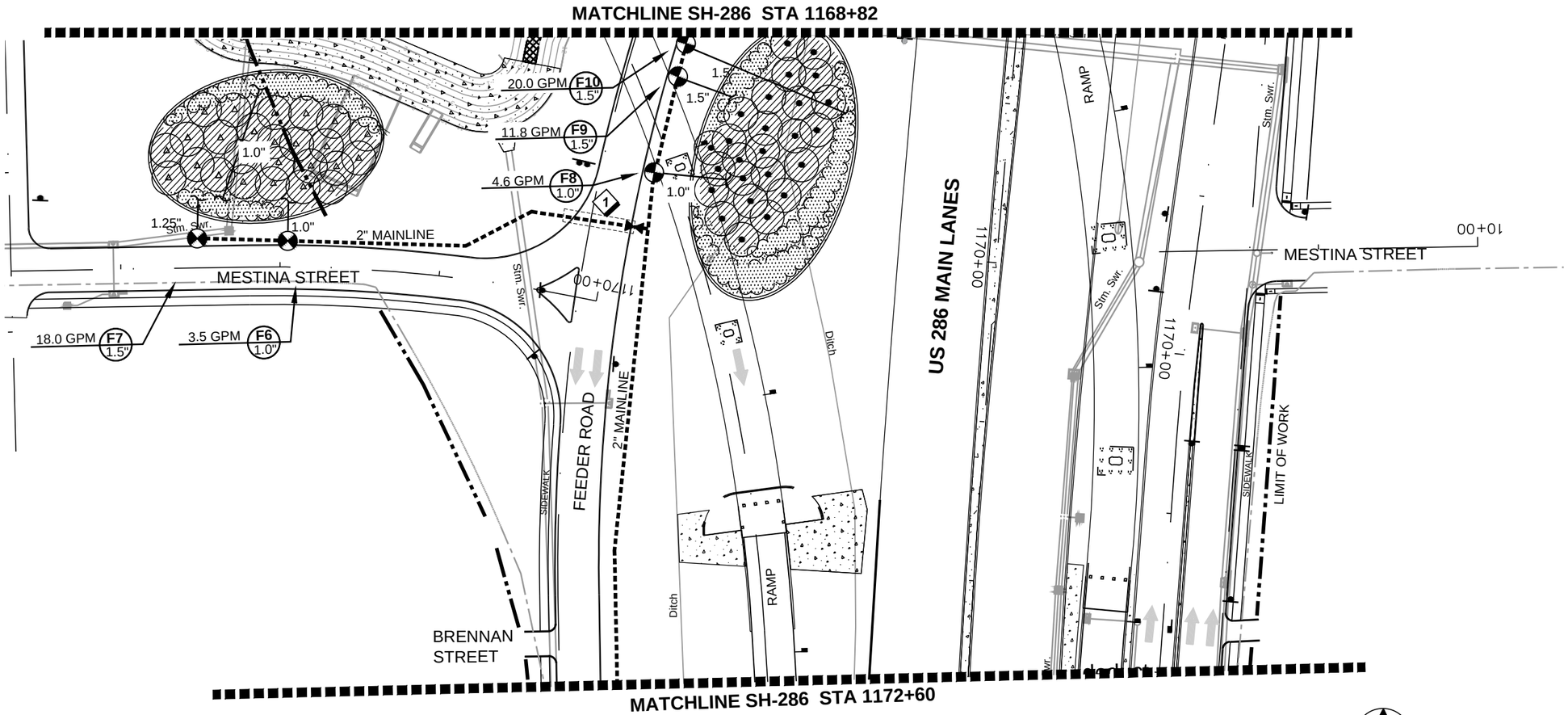

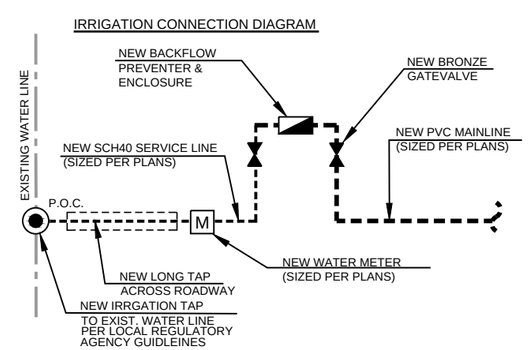

N

0 20 40 80

SCALE 1" = 80'

GENERAL NOTES:

1. SEE LANDSCAPE GENERAL NOTES SHEET 1 OF 1 FOR ADDITIONAL INFORMATION
2. SEE IRRIGATION DETAILS SHEETS
3. IRRIGATION SYSTEM PAID FOR UNDER 0170-6002

IRRIGATION LEGEND

- CLASS 315 LATERAL
- SCH-40 PVC MAINLINE
- 1 6" SCH-40 PVC SLEEVE/BORE
- 2 4" SCH-40 PVC SLEEVE/BORE
- TREE DRIP SYSTEM
- SHRUB GROUND COVER DRIP SYSTEM
- HUNTER ICV SERIES VALVE(SIZE AS NOTED)
- GATE VALVE
- POINT OF CONNECTION, ***SEE DIAGRAM, THIS SHEET***
- C XC HYBRID CONTROLLER
- MS RAIN MOISTURE SENSOR
- A2 / 1.0" / 15.0 GPM — CONTROLLER NUMBER; ZONE NUMBER; ZONE GALLONAGE PER MINUTE - ACTUAL; VALVE SIZE (INCHES)

STATE OF TEXAS
MICHAEL P. MAUER
1510
REGISTERED LANDSCAPE ARCHITECT
April 6, 2021

FLATIRON/DRAGADOS LLC

M2L Associates Inc.
Houston, Texas 77024
T: 713-722-8897 F: 713-722-8048
Landscape Architecture • Land Planning • Urban Design

Texas Department of Transportation ® 2016

US 181 HARBOR BRIDGE

IRRIGATION PLAN

SH 286
(STA 1172+60 -1168+82)

SHEET 3 OF 4

DESIGN	FED.RD. DIV.NO.	FEDERAL AID PROJECT NO.		HIGHWAY NO.
GRAPHICS	X	(See Title Sheet)		
	STATE	DISTRICT	COUNTY	SHEET NO.
CHECK	TEXAS	CRP	NUECES	C203
CHECK	CONTROL	SECTION	JOB	
	0101	06	095	92

SH-286 STA 1165+98 (SEE I-37 STA 132+00 - 122+00)

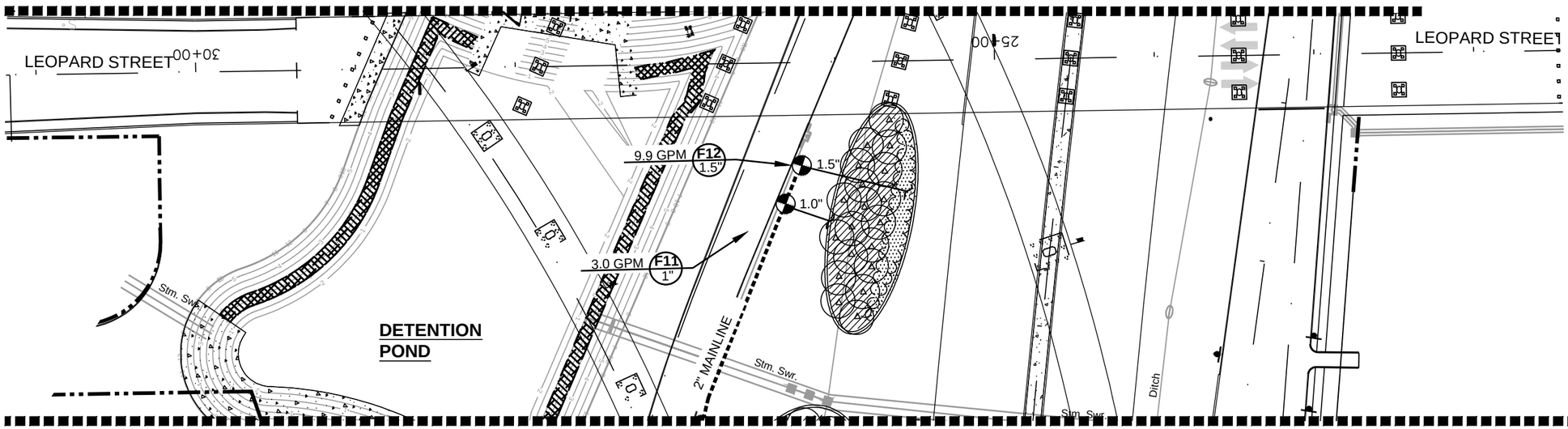

MATCHLINE SH-286 STA 1168+82

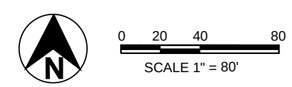

IRRIGATION CONNECTION DIAGRAM

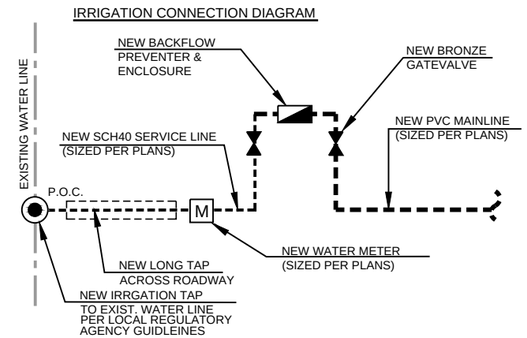

GENERAL NOTES:

1. SEE LANDSCAPE GENERAL NOTES SHEET 1 OF 1 FOR ADDITIONAL INFORMATION
2. SEE IRRIGATION DETAILS SHEETS
3. IRRIGATION SYSTEM PAID FOR UNDER 0170-6002

IRRIGATION LEGEND

- CLASS 315 LATERAL
- SCH-40 PVC MAINLINE
- 1 — 6" SCH-40 PVC SLEEVE/BORE
- 2 — 4" SCH-40 PVC SLEEVE/BORE
- TREE DRIP SYSTEM
- SHRUB GROUND COVER DRIP SYSTEM
- HUNTER ICV SERIES VALVE(SIZE AS NOTED)
- GATE VALVE
- POINT OF CONNECTION, ***SEE DIAGRAM, THIS SHEET***
- C — XC HYBRID CONTROLLER
- MS — RAIN MOISTURE SENSOR
- A2 — CONTROLLER NUMBER
- 15.0 GPM — ZONE NUMBER; ZONE GALLONAGE PER MINUTE - ACTUAL
- 1.0" — VALVE SIZE (INCHES)

STATE OF TEXAS
MICHAEL P. MAUER
1510
REGISTERED LANDSCAPE ARCHITECT
April 6, 2021

FLATIRON/DRAGADOS LLC

M2L Associates Inc.
Houston, Texas 77024
T: 713-722-8897 F: 713-722-8048
Landscape Architecture • Land Planning • Urban Design

Texas Department of Transportation ® 2016

US 181 HARBOR BRIDGE

IRRIGATION PLAN

SH 286
(STA 1168+82 -1165+98)

SHEET 4 OF 4

DESIGN	FED.RD. DIV.NO.	FEDERAL AID PROJECT NO.		HIGHWAY NO.
GRAPHICS	X	(See Title Sheet)		
	STATE	DISTRICT	COUNTY	SHEET NO.
CHECK	TEXAS	CRP	NUECES	C204
CHECK	CONTROL	SECTION	JOB	
	0101	06	095	93

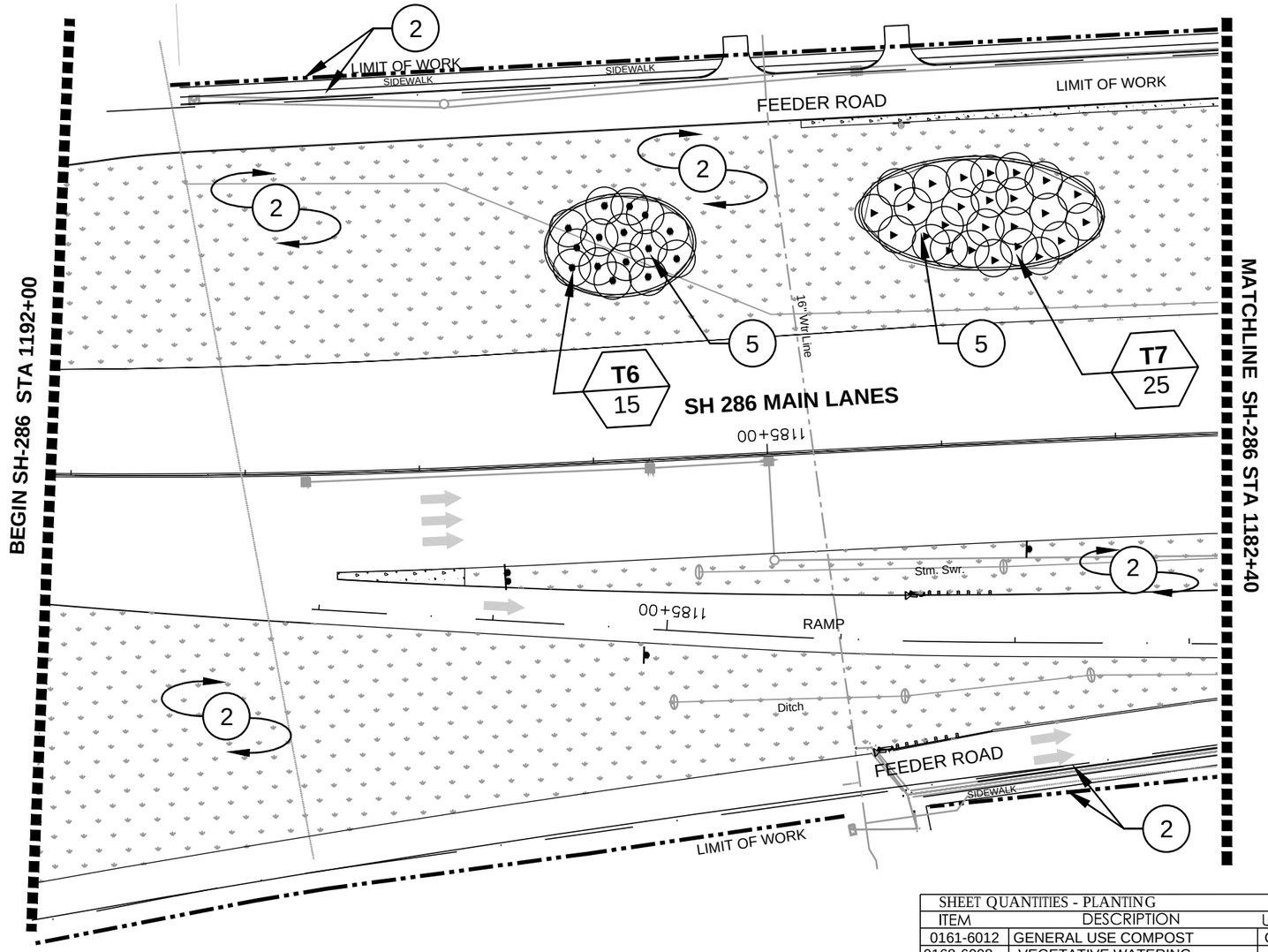

BASE LANDSCAPE COMMITMENT

TYPE A/B SEEDING
0 SHRUBS/ORNAMENTAL GRASSES
40 TREES

GENERAL NOTES:

1. SEE LANDSCAPE GENERAL NOTES SHEET 1 OF 1 FOR ADDITIONAL INFORMATION

DRAWING LEGEND:

T1 / 3 — PLANT MATERIAL SYMBOL; QUANTITY

0 20 40 80
SCALE 1" = 80'

DETAIL NOTES:

1. **NOT USED**
2. TYPE A SEEDING , **SEE FERTILIZER, SEED, SOD, STRAW, COMPOST AND WATER, SHEET 1 OF 1**
3. **NOT USED**
4. **NOT USED**
5. 4" MULCH/TOP DRESSING
6. TYPE B SEEDING, **SEE FERTILIZER, SEED, SOD, STRAW, COMPOST AND WATER, SHEET 1 OF 1**

DRAWING LEGEND:

TYPE A SEEDING - Permanent Drill Seeding (0164-6066) with Straw Mulch

TYPE B SEEDING - Permanent Cellulose Fiber Mulch Seeding (0164-6057)

CONCRETE RIPRAP - See Civil Engineering Drawings

SHEET QUANTITIES - PLANTING

ITEM	DESCRIPTION	UNIT	QNTY.
0161-6012	GENERAL USE COMPOST	CY	685
0168-6008	VEGETATIVE WATERING	MG	460.8
0164-6066	DRILL SEEDING (PERM) (WARM OF COOL)	SY	18577
0164-6057	CELL FBR MLCH SEED (PERM)(SPECIAL MIX)	SY	0
0166-6001	FERTILIZER	AC	10.2
0192-6012	MULCH	CY	287
0162-6003	STRAW OR HAY MULCH	SY	18577
0192-6004	PLANT MATERIAL (3 GALLON)(SHRUB)	EA	0
0192-6026	PLANT MATERIAL (65 GALLON)(TREE)	EA	40
0192-6063	PLANT BED PREP (TYPE I)	SY	1145
	NOT USED	-	-
0192-6065	PLANT BED PREP (TYPE III)	SY	0
0192-6066	PLANT BED PREP (TYPE IV)	SY	18577
1006-6001	LANDSCAPE SOIL AMENDMENT (TYPE I)	EA	40
1006-6002	LANDSCAPE SOIL AMENDMENT (TYPE II)	SY	18577
1006-6003	LANDSCAPE SOIL AMENDMENT (TYPE III)	SY	40
1006-6004	LANDSCAPE SOIL AMENDMENT (TYPE IV)	SY	0

STATE OF TEXAS
MICHAEL P. MAUER
1510
REGISTERED LANDSCAPE ARCHITECT
April 6, 2021

FLATIRON/DRAGADOS LLC

M2L Associates Inc.
Houston, Texas 77024
T: 713-722-8897 F: 713-722-8048
Landscape Architecture • Land Planning • Urban Design

Texas Department of Transportation ® 2016

US 181 HARBOR BRIDGE

PLANTING PLAN

SH 286
(STA 1192+00 -1182+40)

SHEET 1 OF 4

DESIGN	FED.RD. DIV.NO.	FEDERAL AID PROJECT NO.		HIGHWAY NO.
GRAPHICS	X	(See Title Sheet)		
	STATE	DISTRICT	COUNTY	SHEET NO.
CHECK	TEXAS	CRP	NUECES	C301
CHECK	CONTROL	SECTION	JOB	
	0101	06	095	94

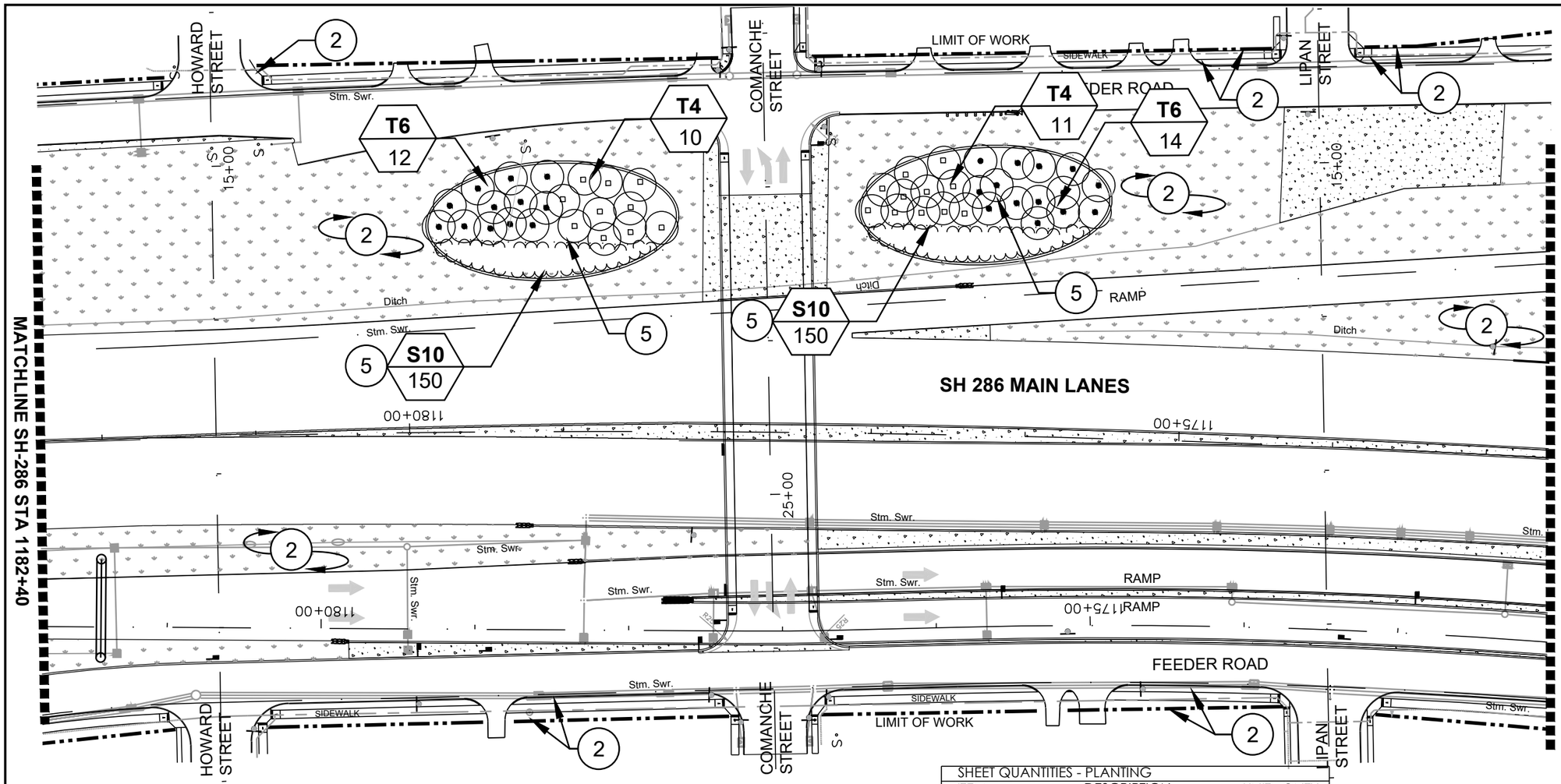

BASE LANDSCAPE COMMITMENT

TYPE A/B SEEDING
300 SHRUBS/ORNAMENTAL GRASSES
47 TREES

0 20 40 80
SCALE 1" = 80'

DETAIL NOTES:

1. **NOT USED**
2. TYPE A SEEDING , **SEE FERTILIZER, SEED, SOD, STRAW, COMPOST AND WATER, SHEET 1 OF 1**
3. **NOT USED**
4. **NOT USED**
5. 4" MULCH/TOP DRESSING
6. TYPE B SEEDING, **SEE FERTILIZER, SEED, SOD, STRAW, COMPOST AND WATER, SHEET 1 OF 1**

GENERAL NOTES:

1. SEE LANDSCAPE GENERAL NOTES SHEET 1 OF 1 FOR ADDITIONAL INFORMATION

DRAWING LEGEND:

TYPE A SEEDING - Permanent Drill Seeding (0164-6066) with Straw Mulch

TYPE B SEEDING - Permanent Cellulose Fiber Mulch Seeding (0164-6057)

CONCRETE RIPRAP - See Civil Engineering Drawings

DRAWING LEGEND:

T1 / 3

PLANT MATERIAL SYMBOL

QUANTITY

SHEET QUANTITIES - PLANTING

ITEM	DESCRIPTION	UNIT	QNTY.
0161-6012	GENERAL USE COMPOST	CY	520
0168-6008	VEGETATIVE WATERING	MG	385.6
0164-6066	DRILL SEEDING (PERM) (WARM OF COOL)	SY	15553
0164-6057	CELL FBR MLCH SEED (PERM)(SPECIAL MIX)	SY	0
0166-6001	FERTILIZER	AC	8.6
0192-6012	MULCH	CY	440
0162-6003	STRAW OR HAY MULCH	SY	15553
0192-6004	PLANT MATERIAL (3 GALLON)(SHRUB)	EA	300
0192-6026	PLANT MATERIAL (65 GALLON)(TREE)	EA	47
0192-6063	PLANT BED PREP (TYPE I)	SY	1160
	NOT USED		0
0192-6065	PLANT BED PREP (TYPE III)	SY	295
0192-6066	PLANT BED PREP (TYPE IV)	SY	15553
1006-6001	LANDSCAPE SOIL AMENDMENT (TYPE I)	EA	47
1006-6002	LANDSCAPE SOIL AMENDMENT (TYPE II)	SY	15553
1006-6003	LANDSCAPE SOIL AMENDMENT (TYPE III)	SY	47
1006-6004	LANDSCAPE SOIL AMENDMENT (TYPE IV)	SY	885

STATE OF TEXAS
MICHAEL P. MAUER
1510
REGISTERED LANDSCAPE ARCHITECT
SEP 9, 2022

FLATIRON/DRAGADOS LLC

M2L Associates Inc.
Houston, Texas 77024
T: 713-722-8897 F: 713-722-8048
•Landscape Architecture•
•Land Planning•Urban Design•

Texas Department of Transportation ®2016

US 181 HARBOR BRIDGE

PLANTING PLAN

SH 286
(STA 1182+40 -1172+60)

SHEET 2 OF 4

DESIGN	FED. RD. DIV.NO.	FEDERAL AID PROJECT NO.		HIGHWAY NO.
GRAPHICS	X	(See Title Sheet)		
	STATE	DISTRICT	COUNTY	SHEET NO.
CHECK	TEXAS	CRP	NUECES	C302
CHECK	CONTROL	SECTION	JOB	95
	0101	06	095	

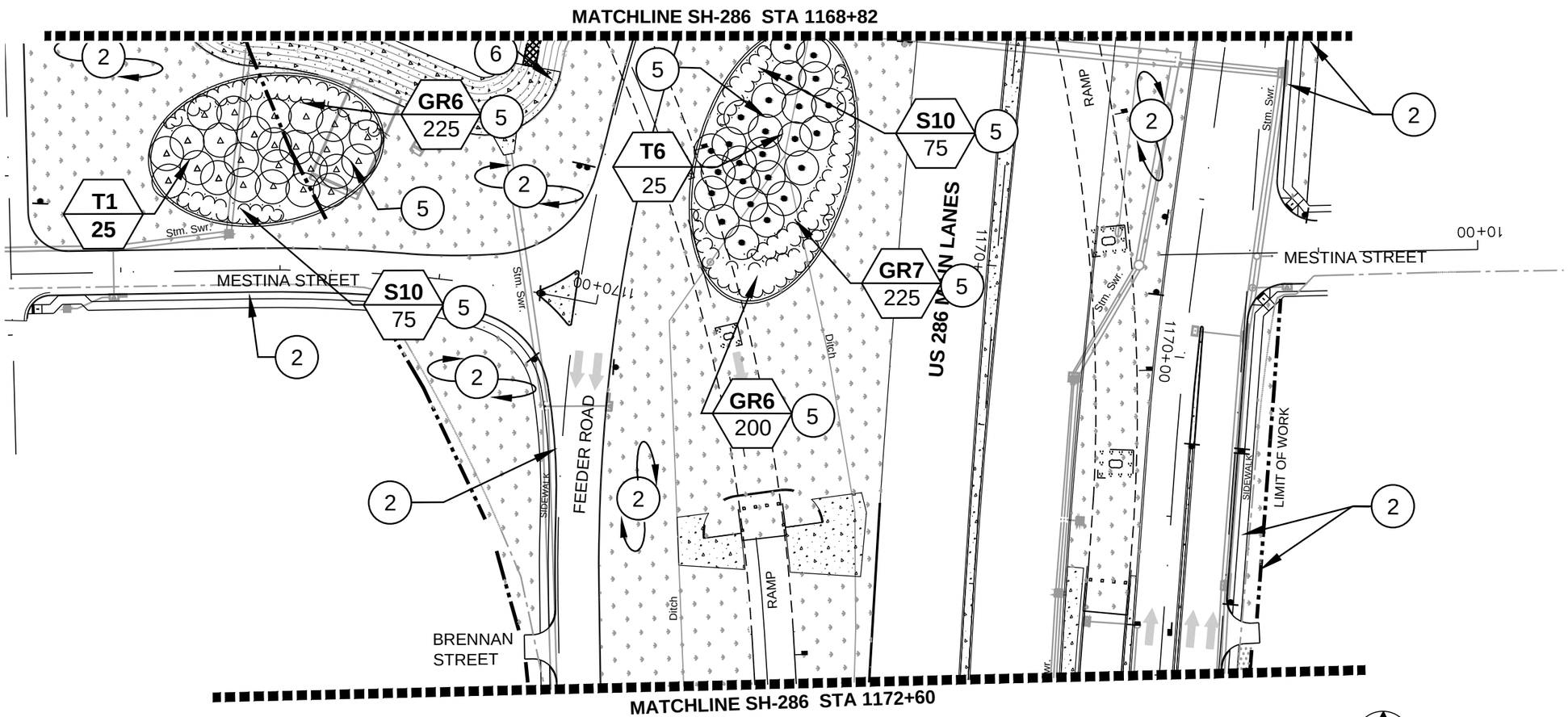

BASE LANDSCAPE COMMITMENT

TYPE A/B SEEDING
50 TREES
800 SHRUBS / GROUND COVERS

DRAWING LEGEND:

T1 / 3 — PLANT MATERIAL SYMBOL; QUANTITY

DRAWING LEGEND:

TYPE A SEEDING - Permanent Drill Seeding (0164-6066) with Straw Mulch

TYPE B SEEDING - Permanent Cellulose Fiber Mulch Seeding (0164-6057)

CONCRETE RIPRAP - See Civil Engineering Drawings

N

0 20 40 80
SCALE 1" = 80'

DETAIL NOTES:

1. **NOT USED**
2. TYPE A SEEDING , **SEE FERTILIZER, SEED, SOD, STRAW, COMPOST AND WATER, SHEET 1 OF 1**
3. **NOT USED**
4. **NOT USED**
5. 4" MULCH/TOP DRESSING
6. TYPE B SEEDING, **SEE FERTILIZER, SEED, SOD, STRAW, COMPOST AND WATER, SHEET 1 OF 1**

GENERAL NOTES:

1. SEE LANDSCAPE GENERAL NOTES SHEET 1 OF 1 FOR ADDITIONAL INFORMATION

SHEET QUANTITIES - PLANTING

ITEM	DESCRIPTION	UNIT	QNTY.
0161-6012	GENERAL USE COMPOST	CY	688
0168-6008	VEGETATIVE WATERING	MG	336.2
0164-6066	DRILL SEEDING (PERM) (WARM OF COOL)	SY	13562
0164-6057	CELL FBR MLCH SEED (PERM)(SPECIAL MIX)	SY	0
0166-6001	FERTILIZER	AC	8.4
0192-6012	MULCH	CY	784
0162-6003	STRAW OR HAY MULCH	SY	13562
0192-6004	PLANT MATERIAL (3 GALLON)(SHRUB)	EA	800
0192-6026	PLANT MATERIAL (65 GALLON)(TREE)	EA	50
0192-6063	PLANT BED PREP (TYPE I)	SY	2350
	NOT USED	-	-
0192-6065	PLANT BED PREP (TYPE III)	SY	785
0192-6066	PLANT BED PREP (TYPE IV)	SY	13562
1006-6001	LANDSCAPE SOIL AMENDMENT (TYPE I)	EA	50
1006-6002	LANDSCAPE SOIL AMENDMENT (TYPE II)	SY	13562
1006-6003	LANDSCAPE SOIL AMENDMENT (TYPE III)	SY	50
1006-6004	LANDSCAPE SOIL AMENDMENT (TYPE IV)	SY	2355

STATE OF TEXAS
MICHAEL P. MAUER
1510
REGISTERED LANDSCAPE ARCHITECT
April 6, 2021

FLATIRON/DRAGADOS LLC

M2L Associates Inc.
Houston, Texas 77024
T: 713-722-8897 F: 713-722-8048
Landscape Architecture • Land Planning • Urban Design

Texas Department of Transportation ® 2016

US 181 HARBOR BRIDGE

PLANTING PLAN

SH 286
(STA 1172+60 -1168+82)

SHEET 3 OF 4

DESIGN	FED.RD. DIV.NO.	FEDERAL AID PROJECT NO.		HIGHWAY NO.
GRAPHICS	X	(See Title Sheet)		
	STATE	DISTRICT	COUNTY	SHEET NO.
CHECK	TEXAS	CRP	NUECES	C303
CHECK	CONTROL	SECTION	JOB	96
	0101	06	095	

DRAWING LEGEND:

TYPE A SEEDING - Permanent Drill Seeding (0164-6066) with Straw Mulch

TYPE B SEEDING - Permanent Cellulose Fiber Mulch Seeding (0164-6057)

CONCRETE RIPRAP - See Civil Engineering Drawings

BASE LANDSCAPE COMMITMENT

TYPE A/B SEEDING
200 SHRUBS/ORNAMENTAL GRASSES
20 TREES

SH-286 STA 1165+98 (SEE I-37 STA 132+00 - 122+00)

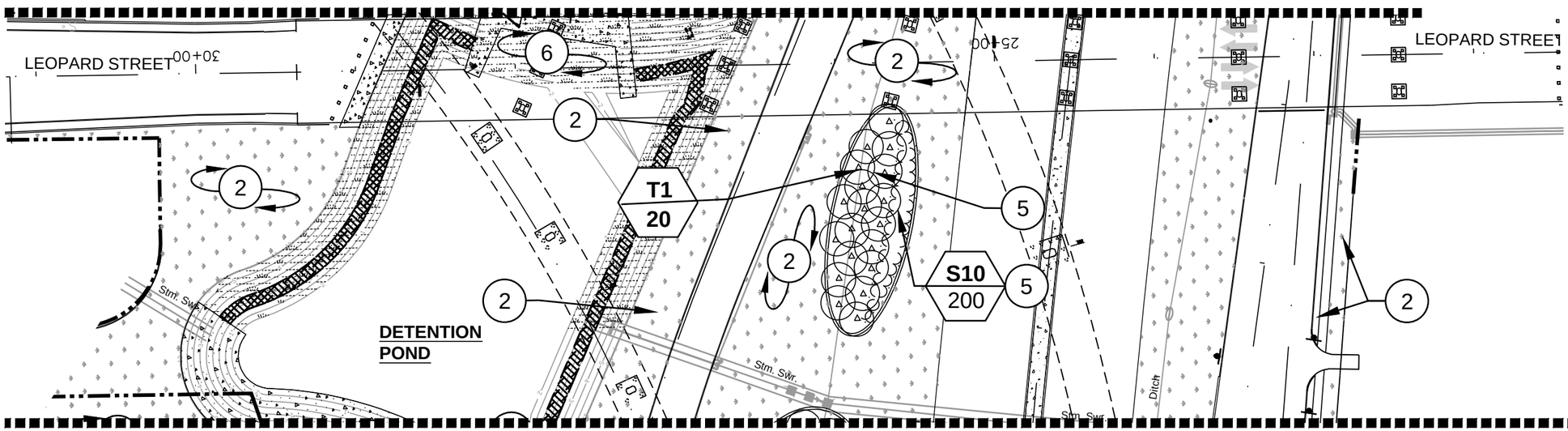

MATCHLINE SH-286 STA 1168+82

DRAWING LEGEND:

T1 / 3 — PLANT MATERIAL SYMBOL; QUANTITY

N

0 20 40 80
SCALE 1" = 80'

DETAIL NOTES:

1. **NOT USED**
2. TYPE A SEEDING , **SEE FERTILIZER, SEED, SOD, STRAW, COMPOST AND WATER, SHEET 1 OF 1**
3. **NOT USED**
4. **NOT USED**
5. 4" MULCH/TOP DRESSING
6. TYPE B SEEDING, **SEE FERTILIZER, SEED, SOD, STRAW, COMPOST AND WATER, SHEET 1 OF 1**

GENERAL NOTES:

1. SEE LANDSCAPE GENERAL NOTES SHEET 1 OF 1 FOR ADDITIONAL INFORMATION

SHEET QUANTITIES - PLANTING

ITEM	DESCRIPTION	UNIT	QNTY.
0161-6012	GENERAL USE COMPOST	CY	310
0168-6008	VEGETATIVE WATERING	MG	216.2
0164-6066	DRILL SEEDING (PERM) (WARM OF COOL)	SY	5837
0164-6057	CELL FBR MLCH SEED (PERM)(SPECIAL MIX)	SY	2882
0166-6001	FERTILIZER	AC	5.1
0192-6012	MULCH	CY	159
0162-6003	STRAW OR HAY MULCH	SY	5837
0192-6004	PLANT MATERIAL (3 GALLON)(SHRUB)	EA	200
0192-6026	PLANT MATERIAL (65 GALLON)(TREE)	EA	20
0192-6063	PLANT BED PREP (TYPE I)	SY	490
	NOT USED	-	-
0192-6065	PLANT BED PREP (TYPE III)	SY	146
0192-6066	PLANT BED PREP (TYPE IV)	SY	8719
1006-6001	LANDSCAPE SOIL AMENDMENT (TYPE I)	EA	20
1006-6002	LANDSCAPE SOIL AMENDMENT (TYPE II)	SY	8719
1006-6003	LANDSCAPE SOIL AMENDMENT (TYPE III)	SY	20
1006-6004	LANDSCAPE SOIL AMENDMENT (TYPE IV)	SY	438

STATE OF TEXAS
MICHAEL P. MAUER
1510
REGISTERED LANDSCAPE ARCHITECT
April 6, 2021

FLATIRON/DRAGADOS LLC

M2L Associates Inc.
Houston, Texas 77024
T: 713-722-8897 F: 713-722-8048
Landscape Architecture • Land Planning • Urban Design

Texas Department of Transportation ® 2016

US 181 HARBOR BRIDGE

PLANTING PLAN

SH 286
(STA 1168+82 -1165+98)

SHEET 4 OF 4

DESIGN	FED.RD. DIV.NO.	FEDERAL AID PROJECT NO.		HIGHWAY NO.
GRAPHICS	X	(See Title Sheet)		
	STATE	DISTRICT	COUNTY	SHEET NO.
CHECK	TEXAS	CRP	NUECES	C304
CHECK	CONTROL	SECTION	JOB	
	0101	06	095	97

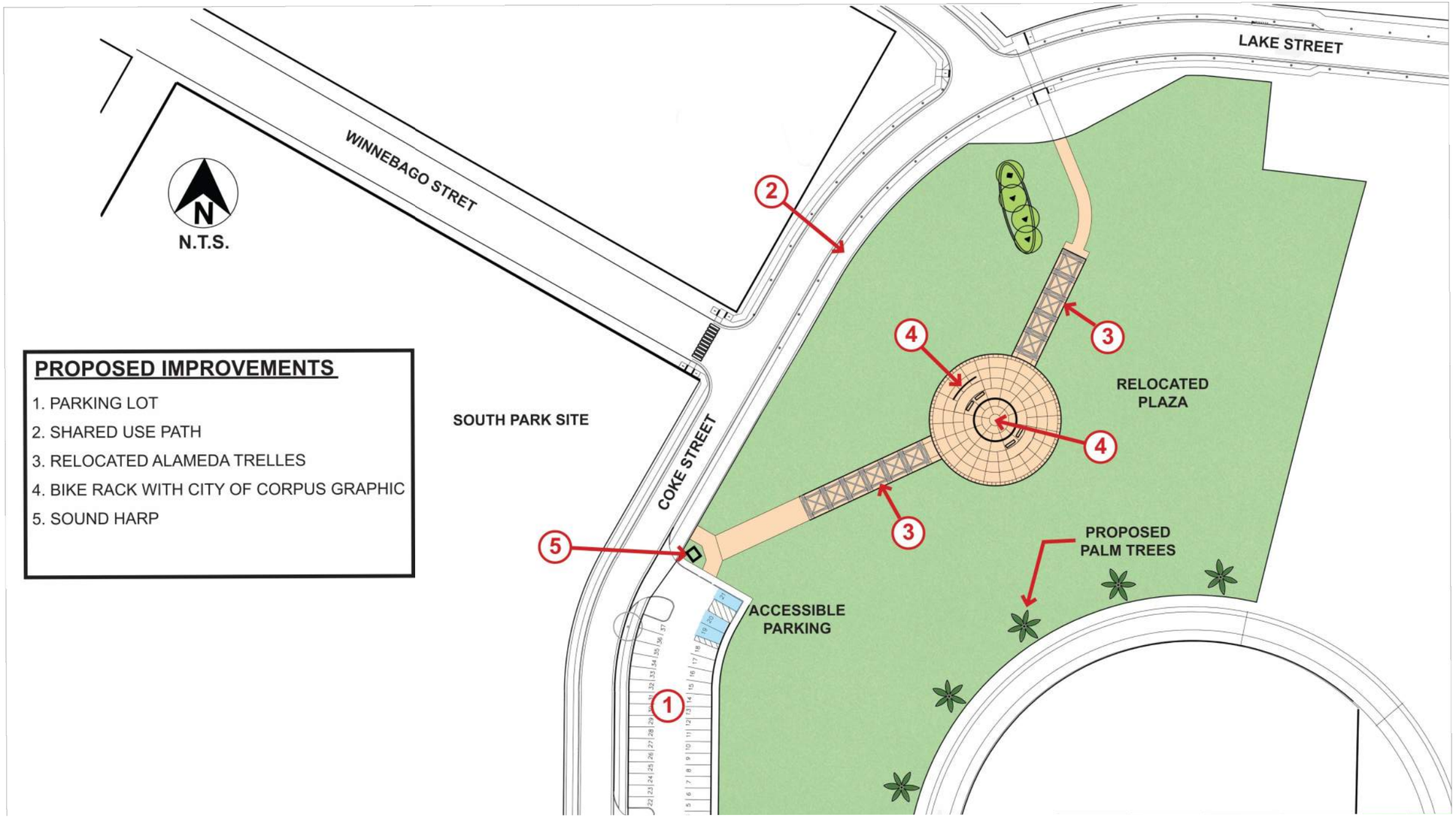

PROPOSED IMPROVEMENTS

1. PARKING LOT
2. SHARED USE PATH
3. RELOCATED ALAMEDA TRELLES
4. BIKE RACK WITH CITY OF CORPUS GRAPHIC
5. SOUND HARP

STATE OF TEXAS
MICHAEL P. MAUER
1510
REGISTERED LANDSCAPE ARCHITECT
MAR 13, 2023

FLATIRON/DRAGADOS LLC

M2L Associates Inc.
Houston, Texas 77024
T: 713-722-8897 F: 713-722-8048
• Landscape Architecture •
• Land Planning • Urban Design •

Texas Department of Transportation ® 2016

US 181 HARBOR BRIDGE

SOUTH PARK MASTER PLAN

SHEET 1 OF 1

DESIGN	FED.RD. DIV.NO.	FEDERAL AID PROJECT NO.		HIGHWAY NO.
GRAPHICS	X	(See Title Sheet)		
	STATE	DISTRICT	COUNTY	SHEET NO.
CHECK	TEXAS	CRP	NUECES	D101
CHECK	CONTROL	SECTION	JOB	
	0101	06	095	98

SHEET QUANTITIES - PLANTING			
ITEM	DESCRIPTION	UNIT	QNTY.
0450-6051	RAIL (HANDRAIL) (TY E)	LF	430
0528-6033	CONCRETE CURB (LANDSCAPE)	LF	150
0528-6005	COLORED TEXTURED CONCRETE(6") (TY4)	SY	860
0531-6001	CONCRETE SIDEWALKS (4")	SY	1040
1002-6005	LANDSCAPE AMENITY (TY 4)	EA	1
1002-6007	LANDSCAPE AMENITY (TY 7)	SY	400
1002-6009	LANDSCAPE AMENITY (TY 8)	EA	1
1002-6002	LANDSCAPE AMENITY (TY 1)	EA	4

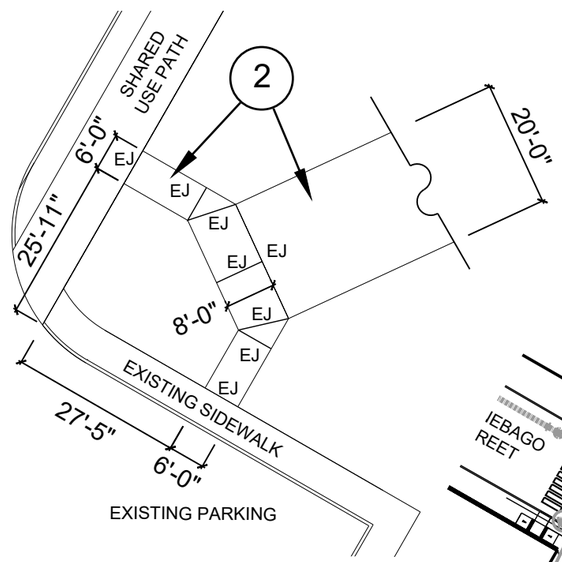

DETAIL ENLARGEMENT
N.T.S.

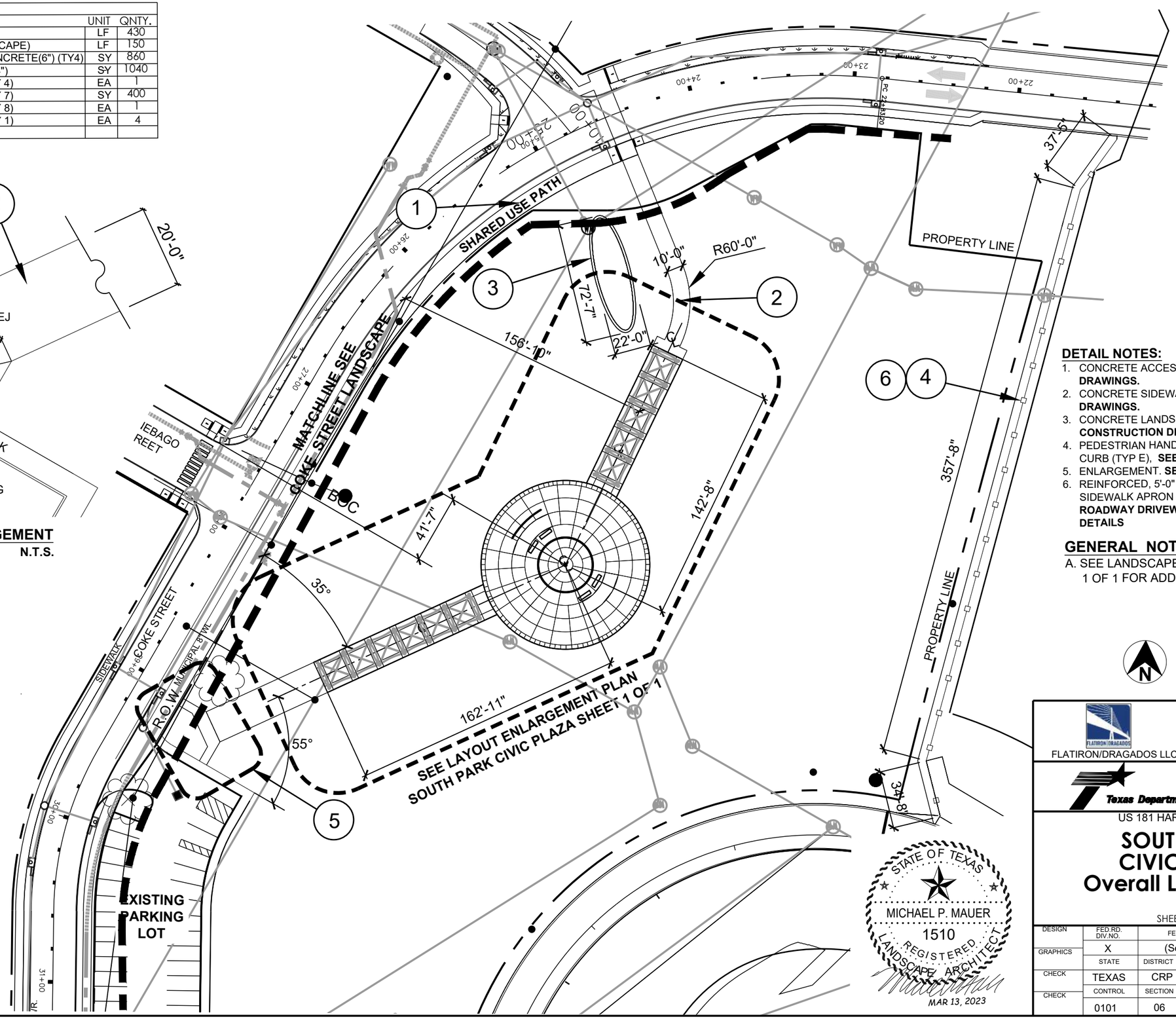

DETAIL NOTES:

1. CONCRETE ACCESS RAMPS, **SEE SITE CIVIL DRAWINGS.**
2. CONCRETE SIDEWALKS, **SEE SITE CIVIL DRAWINGS.**
3. CONCRETE LANDSCAPE CURBING. **SEE CONSTRUCTION DETAILS SHEET 3 OF 10.**
4. PEDESTRIAN HANDRAIL DETAIL WITHOUT CURB (TYP E), **SEE PRD-13**
5. ENLARGEMENT. **SEE DETAIL ON THIS SHEET.**
6. REINFORCED, 5'-0" WIDE CONCRETE SIDEWALK APRON (0531-6001), **SEE ROADWAY DRIVEWAY AND SIDEWALK DETAILS**

GENERAL NOTES:

A. SEE LANDSCAPE GENERAL NOTES SHEET 1 OF 1 FOR ADDITIONAL INFORMATION

N

0 10 30 60
SCALE 1" = 60'

FLATIRON/DRAGADOS LLC

M2L Associates Inc.
Houston, Texas 77024
T: 713-722-8897 F: 713-722-8048
•Landscape Architecture•
•Land Planning• Urban Design•

Texas Department of Transportation ® 2016

US 181 HARBOR BRIDGE

SOUTH PARK CIVIC PLAZA Overall Layout Plan

SHEET 1 OF 1

STATE OF TEXAS
MICHAEL P. MAUER
1510
REGISTERED LANDSCAPE ARCHITECT
MAR 13, 2023

DESIGN	FED.RD. DIV.NO.	FEDERAL AID PROJECT NO.		HIGHWAY NO.
	X	(See Title Sheet)		
GRAPHICS	STATE	DISTRICT	COUNTY	SHEET NO.
CHECK	TEXAS	CRP	NUECES	D102
CHECK	CONTROL	SECTION	JOB	
	0101	06	095	99

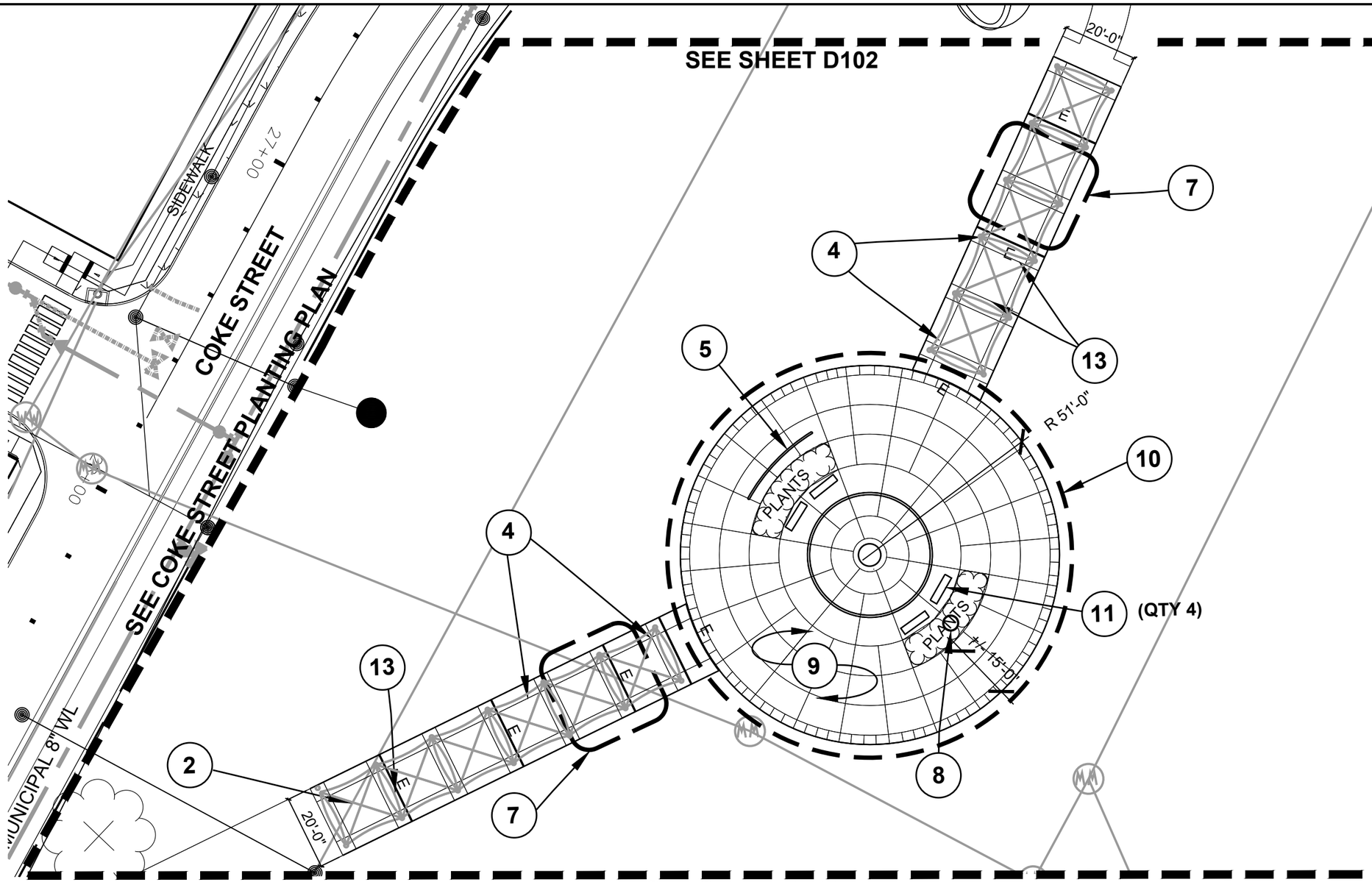

N

0 5 15 30

SCALE 1" = 30'

DETAIL NOTES:

1. CONCRETE SIDEWALK, **SEE CIVIL DRAWINGS.**
2. CONCRETE PAVEMENT JOINT, TYPICALS. **SEE CONSTRUCTION DETAILS 1 OF 10**.
3. CONCRETE ACCESS RAMP, TYPE 1 **, SEE CIVIL DRAWINGS**
4. RELOCATED, GALVANIZED TRELLIS, SEE CONSTRUCTION DETAILS SHEET 7 0F 10 **(SEE STRUCTURAL DRAWINGS SHEETS 143 AND 144**)
5. ORNAMENTAL BIKE RACK, **SEE CONSTRUCTION DETAILS SHEET 6 OF 10**
6. NOT USED.
7. CONCRETE SIDEWALK AT SOUTH PARK PLAZA TRELLIS, **SEE DETAIL #1, CONSTRUCTION DETAILS SHEET 2 OF 10**.
8. WIND CHIME, **SEE DETAIL #4, CONSTRUCTION DETAILS SHEET 9 OF 10**
9. SOUTH PARK PLAZA TYPICAL PAVING DETAIL, **SEE DETAIL #4, CONSTRUCTION DETAILS SHEET 2 OF 10**.
10. SOUTH PARK PLAZA ENLARGEMENT, **SEE DETAIL #3, CONSTRUCTION DETAILS SHEET 2 OF 10** FOR DIMENSIONING AND ADDITIONAL LAYOUT INFORMATION
11. RECYCLED CONCRETE/PLASTIC BENCH, **SEE DETAIL #3, CONSTRUCTION DETAILS 9 OF 10**.
12. NOT USED
13. EXPANSION JOINT WITH SEALANT(NOTED BY '**E**' OR AS REUIRED BY CONSTRUCTION DETAILS, **SEE DETAIL #2, CONSTRUCTION DETAILS SHEET 1 OF 10**.

GENERAL NOTES:

A. SEE LANDSCAPE GENERAL NOTES SHEET 1 OF 1 FOR ADDITIONAL INFORMATION
B. SEE PEDESTRIAN FACILITIES CURB RAMPS PED-18.
C. CONTROL JOINTS AND EXPANSION JOINTS ARE INCIDENTAL TO OTHER PAY ITEMS.

STATE OF TEXAS
MICHAEL P. MAUER
1510
REGISTERED LANDSCAPE ARCHITECT
MAR 13, 2023

FLATIRON/DRAGADOS LLC

M2L Associates Inc.
Houston, Texas 77024
T: 713-722-8897 F: 713-722-8048
• Landscape Architecture • Land Planning • Urban Design •

Texas Department of Transportation ® 2016

US 181 HARBOR BRIDGE

SOUTH PARK CIVIC PLAZA Layout Enlargement

SHEET 1 OF 1

DESIGN	FED.RD. DIV.NO.	FEDERAL AID PROJECT NO.		HIGHWAY NO.
GRAPHICS	X	(See Title Sheet)		
	STATE	DISTRICT	COUNTY	SHEET NO.
CHECK	TEXAS	CRP	NUECES	D103
CHECK	CONTROL	SECTION	JOB	
	0101	06	095	100

GENERAL NOTES:

1. SEE LANDSCAPE GENERAL NOTES SHEET 1 OF 1 FOR ADDITIONAL INFORMATION
2. SEE IRRIGATION DETAILS SHEETS
3. IRRIGATION SYSTEM PAID FOR UNDER 0170-6002
4. DRIP ZONE TYPICAL

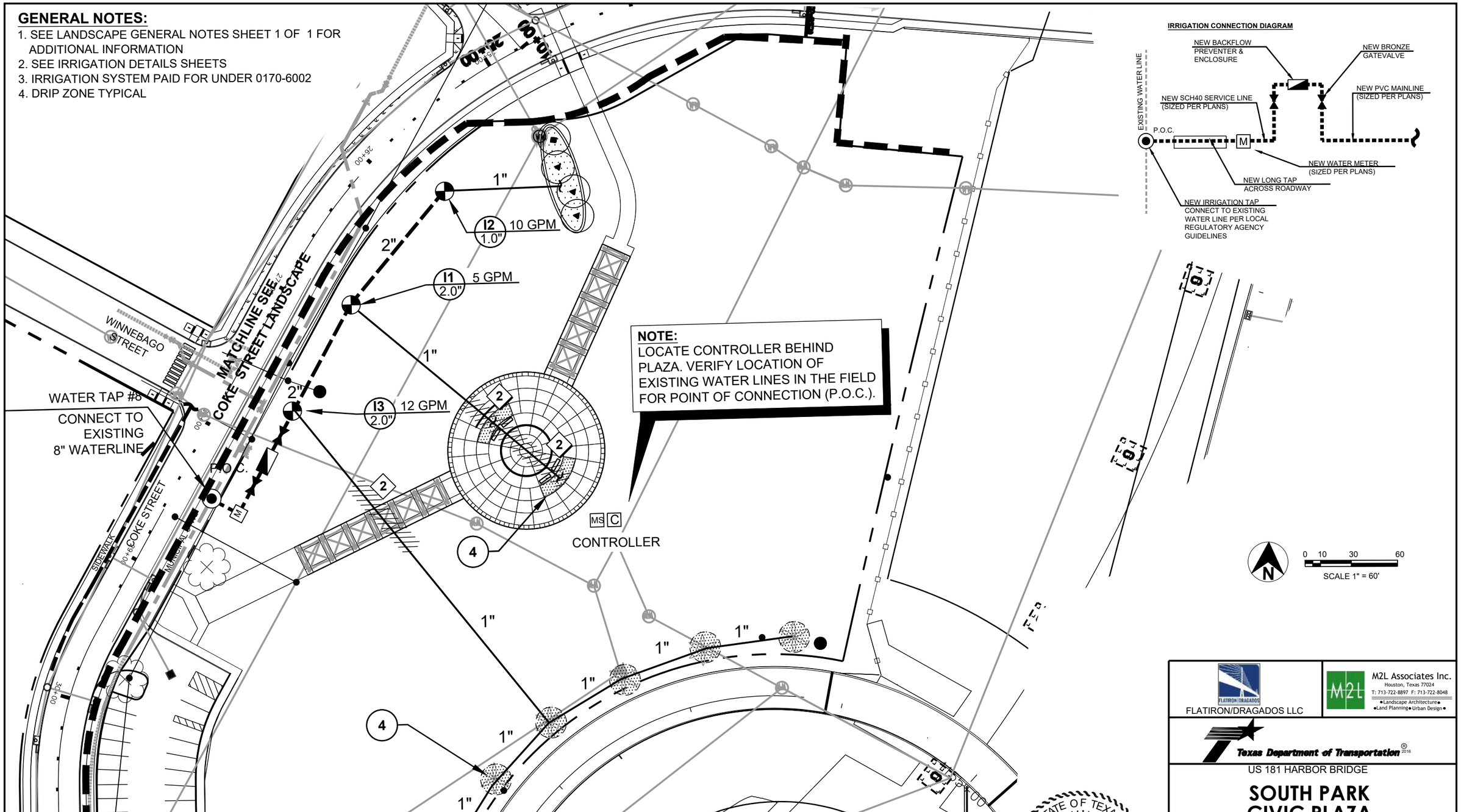

IRRIGATION LEGEND

- CLASS 315 LATERAL
- SCH-40 PVC MAINLINE
- 1 — 6" SCH-40 PVC SLEEVE/BORE
- 2 — 4" SCH-40 PVC SLEEVE/BORE
- TREE DRIP SYSTEM
- SHRUB GROUND COVER DRIP SYSTEM
- HUNTER ICV SERIES VALVE(SIZE AS NOTED)
- GATE VALVE
- POINT OF CONNECTION, ***SEE DIAGRAM, THIS SHEET***
- C — XC HYBRID CONTROLLER
- MS — RAIN MOISTURE SENSOR

A2 / 1.0" / 15.0 GPM
- CONTROLLER NUMBER
- ZONE NUMBER
- ZONE GALLONAGE PER MINUTE - ACTUAL
- VALVE SIZE (INCHES)

STATE OF TEXAS
MICHAEL P. MAUER
1510
REGISTERED LANDSCAPE ARCHITECT
MAR 13, 2023

FLATIRON/DRAGADOS LLC

M2L Associates Inc.
Houston, Texas 77024
T: 713-722-8897 F: 713-722-8048
●Landscape Architecture● ●Land Planning● Urban Design●

Texas Department of Transportation ©2016

US 181 HARBOR BRIDGE

SOUTH PARK CIVIC PLAZA IRRIGATION MAINLINE

SHEET 1 OF 1

DESIGN	FED.RD. DIV.NO.	FEDERAL AID PROJECT NO.		HIGHWAY NO.
GRAPHICS	X	(See Title Sheet)		
	STATE	DISTRICT	COUNTY	SHEET NO.
CHECK	TEXAS	CRP	NUECES	D201
CHECK	CONTROL	SECTION	JOB	
	0101	06	095	101

SHEET QUANTITIES - PLANTING			
ITEM	DESCRIPTION	UNIT	QNTY.
0161-6012	GENERAL USE COMPOST	SY	82
0164-6066	DRILL SEEDING (PERM) (WARM OR COOL)	SY	16,474
0166-6001	FERTILIZER	AC	1.8
0162-6033	STRAW OR HAY MULCH	SY	16,474
0168-6001	VEGETATIVE WATERING	MG	73.6
0192-6063	PLANT BED PREP (TYPE I)	SY	0
0192-6004	PLANT MATERIAL 3 GAL(SHRUB)	EA	100
0192-6026	PLANT MATERIAL 65 GAL(TREE)	EA	4
0192-6059	PALM MATERIAL (TYPE 1)	EA	6
0192-6065	PLANT BED PREP (TYPE III)	SY	56
0192-6066	PLANT BED PREP (TYPE IV)	SY	16,474
0192-6012	MULCH	CY	35
1006-6001	LANDSCAPE SOIL AMENDMENT AMENDMENT (TYPE 1)	SY	10
1006-6002	LANDSCAPE SOIL AMENDMENT (TYPE II)	SY	16,474
1006-6003	LANDSCAPE SOIL AMENDMENT (TYPE III)	SY	10
1006-6004	LANDSCAPE SOIL AMENDMENT (TYPE IV)	SY	168

DRAWING LEGEND:

TYPE A SEEDING - Permanent Drill Seeding (0164-6066) with Straw Mulch Cover (0162-6033)

TYPE B SEEDING - Permanent Cellulose Fiber Mulch Seeding (0164-6057)

DETAIL NOTES:

1. 4" HARD WOOD BARK MULCH.
2. TYPE A SEEDING, PERMANENT DRILL SEEDING WITH STRAW MULCH, **SEE FERTILIZER, SEED, AND SOD, STRAW AND WATER, SHEET 1 OF 1**

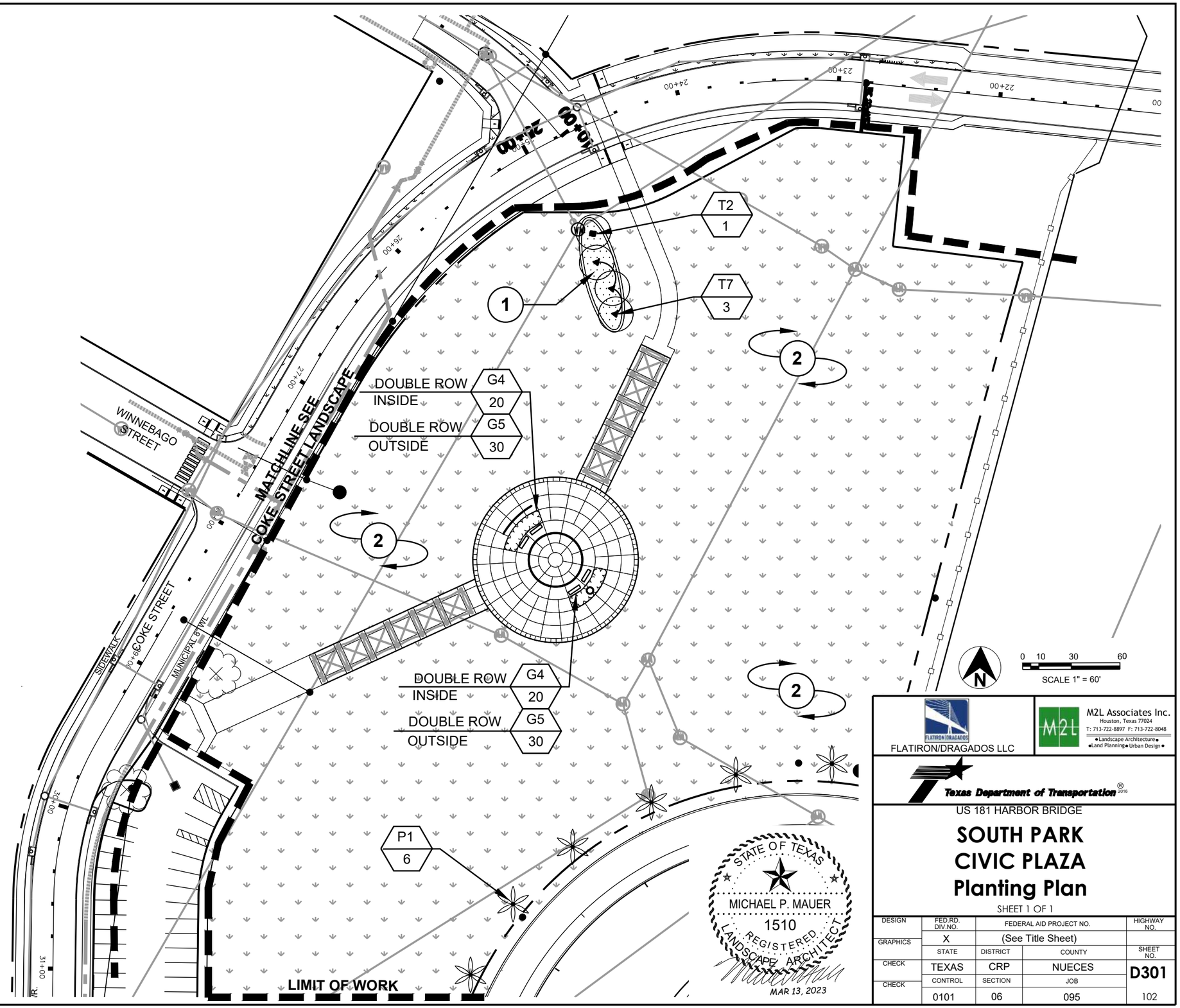

FLATIRON/DRAGADOS LLC

M2L Associates Inc.
Houston, Texas 77024
T: 713-722-8897 F: 713-722-8048
Landscape Architecture • Land Planning • Urban Design

Texas Department of Transportation ®2016

US 181 HARBOR BRIDGE

SOUTH PARK CIVIC PLAZA Planting Plan

SHEET 1 OF 1

DESIGN	FED.RD. DIV.NO.	FEDERAL AID PROJECT NO.		HIGHWAY NO.
GRAPHICS	X	(See Title Sheet)		
	STATE	DISTRICT	COUNTY	SHEET NO.
CHECK	TEXAS	CRP	NUECES	D301
CHECK	CONTROL	SECTION	JOB	
	0101	06	095	102

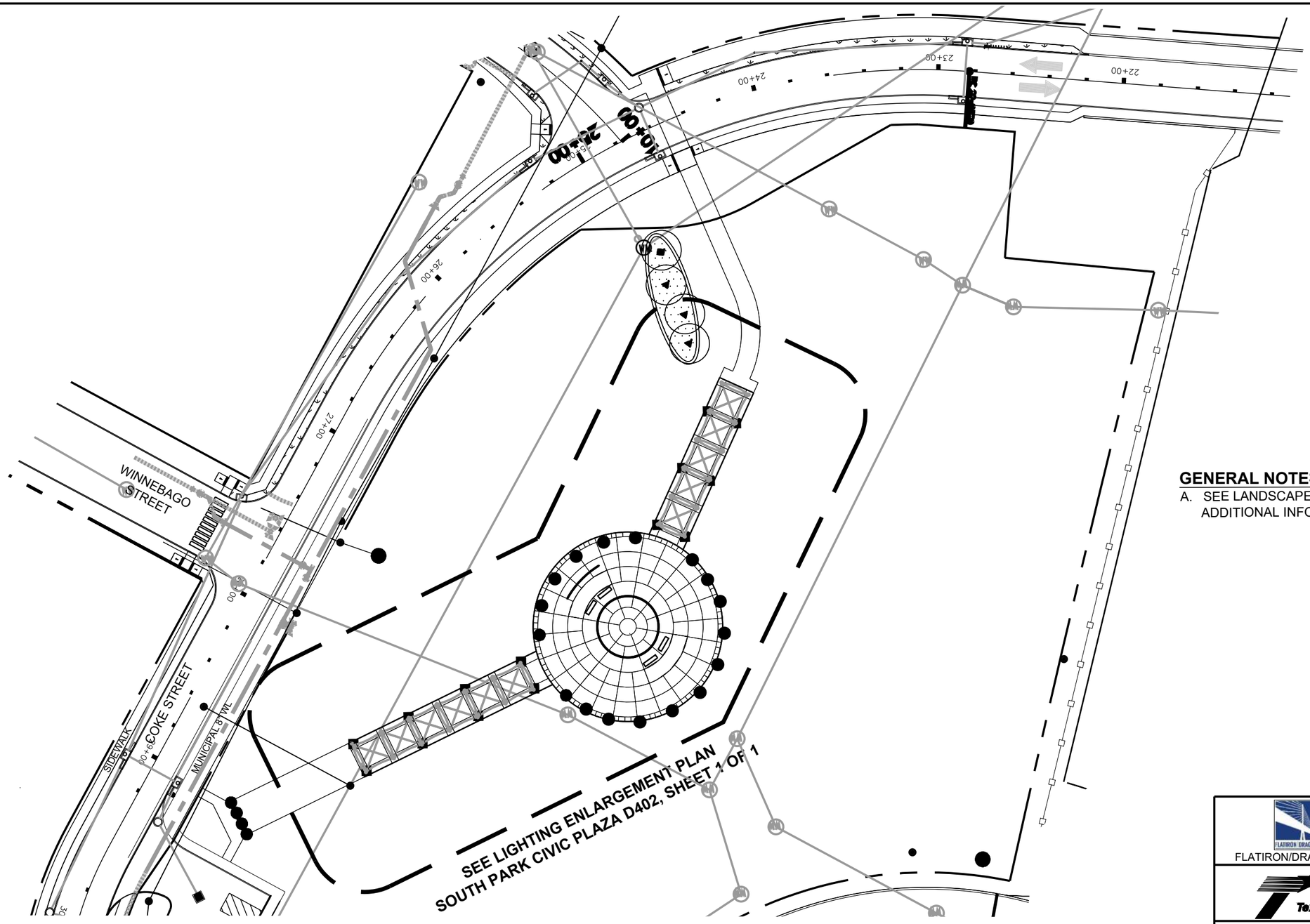

GENERAL NOTES:

A. SEE LANDSCAPE GENERAL NOTES SHEET 1 OF 1 FOR ADDITIONAL INFORMATION

N

0 10 30 60

SCALE 1" = 60'

SYMBOL	TYPE	REFERENCE
■	**METAL TRELLIS POST TOP LED LIGHT** PBDP102-101W128LED4K-MP-PC-LE5-DMG-HS-RCD7-PH8-MGY (LANDSCAPE AMENITY TY 9)	**SEE DETAIL #4, SHEET LD107**
●	**LED PAVEMENT LIGHTS** 4" DIA. EMBEDDED PAVEMENT LIGHTS (LANDSCAPE AMENITY TY 10)	**SEE DETAIL #2, SHEET LD106**

MANUFACTURER:
LUMEC BY SIGNIFY NORTH AMERICA
200 Franklin Square Drive
Somerset, NT 08873
https://www.signify.com, Tel: +1 (855) 486-2216

SOLARPATH INC.
123 Town Square Place #333
Jersey City, NJ 07310
Tel: (888) 333-7652
Contact @Solarpathusa.com

GENERAL NOTES

A. CONTRACTOR TO PROVIDE SHOP DRAWINGS FOR REVIEW AND APPROVAL FOR ATTACHMENT TO RELOCATED TRELLIS.
B. SEE LANDSCAPE GENERAL NOTES SHEET 1 OF 1 FOR ADDITIONAL INFORMATION.
C. SEE SOUTH PARK CIVIC PLAZA ILLUMINATION PLAN SHEET FOR TRELLIS ACCENT LIGHTING

STATE OF TEXAS
MICHAEL P. MAUER
1510
REGISTERED LANDSCAPE ARCHITECT
MAR 13, 2023

FLATIRON/DRAGADOS LLC

M2L Associates Inc.
Houston, Texas 77024
T: 713-722-8897 F: 713-722-8048
•Landscape Architecture•
•Land Planning•Urban Design•

Texas Department of Transportation ® 2016

US 181 HARBOR BRIDGE

SOUTH PARK CIVIC PLAZA Lighting Plan

SHEET 1 OF 2

DESIGN	FED.RD. DIV.NO.	FEDERAL AID PROJECT NO.		HIGHWAY NO.
GRAPHICS	X	(See Title Sheet)		
	STATE	DISTRICT	COUNTY	SHEET NO.
CHECK	TEXAS	CRP	NUECES	D401
CHECK	CONTROL	SECTION	JOB	
	0101	06	095	

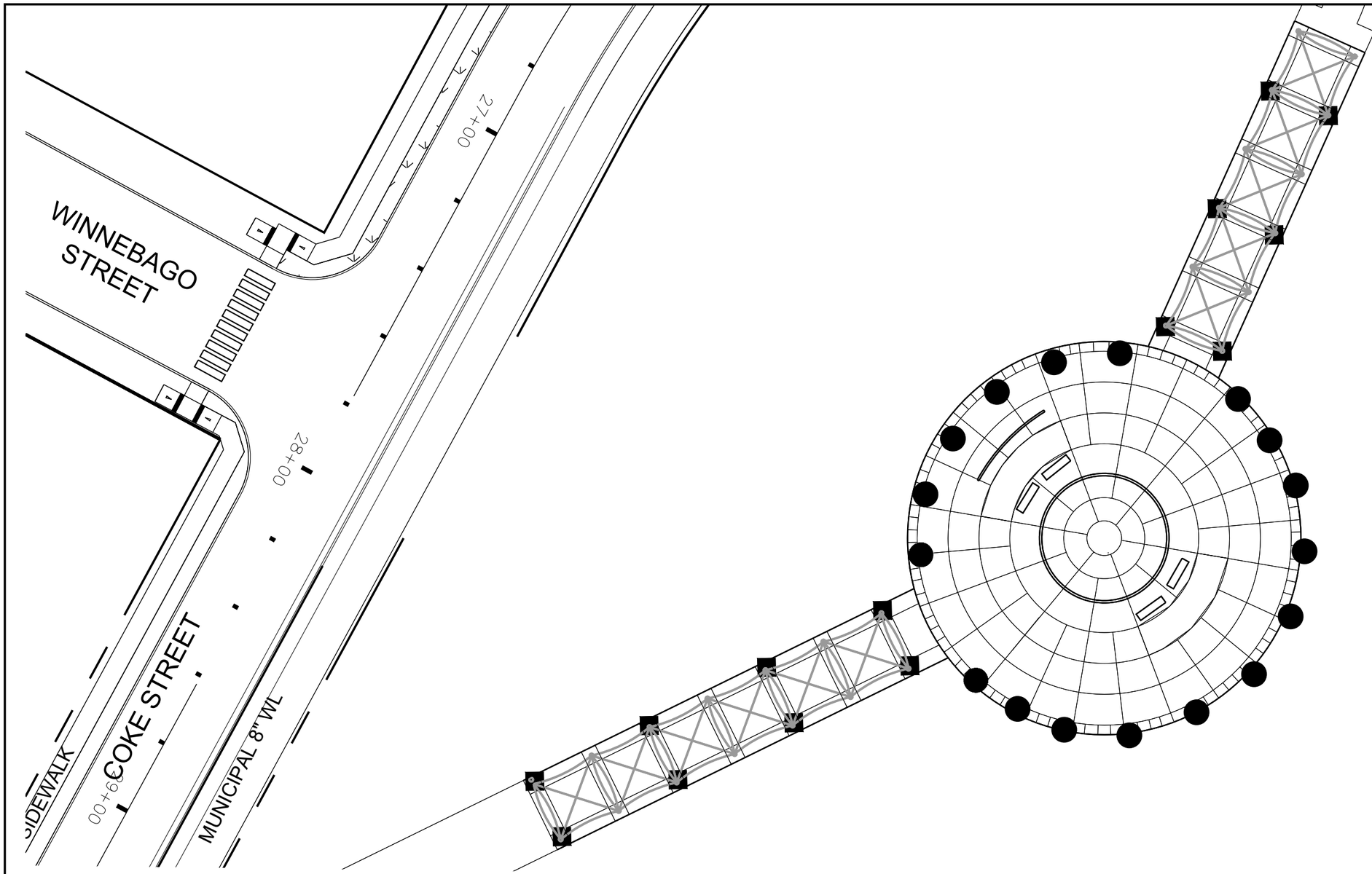

N

0 5 15 30

SCALE 1" = 30'

SYMBOL	TYPE	REFERENCE
■	**METAL TRELLIS POST TOP LED LIGHT** PBDP102-101W128LED4K-MP-PC-LE5-DMG-HS-RCD7-PH8-MGY (LANDSCAPE AMENITY TY 9)	**SEE DETAIL #4, SHEET LD107**
●	**LED PAVEMENT LIGHTS** 4" DIA. EMBEDDED PAVEMENT LIGHTS (LANDSCAPE AMENITY TY 10)	**SEE DETAIL #2, SHEET LD106**

MANUFACTURER:
LUMEC BY SIGNIFY NORTH AMERICA
200 Franklin Square Drive
Somerset, NT 08873
https://www.signify.com, Tel: +1 (855) 486-2216

SOLARPATH INC.
123 Town Square Place #333
Jersey City, NJ 07310
Tel: (888) 333-7652
Contact @Solarpathusa.com

GENERAL NOTES

A. CONTRACTOR TO PROVIDE SHOP DRAWINGS FOR REVIEW AND APPROVAL FOR ATTACHMENT TO RELOCATED TRELLIS.
B. SEE LANDSCAPE GENERAL NOTES SHEET 1 OF 1 FOR ADDITIONAL INFORMATION.
C. SEE SOUTH PARK CIVIC PLAZA ILLUMINATION PLAN SHEET FOR TRELLIS ACCENT LIGHTING

SHEET QUANTITIES - PLANTING

ITEM	DESCRIPTION	UNIT	QNTY.
0618-2012	COND (PVC) (SCH 40)(1")	EA	0
0620-2014	ELEC CONDR (NO. 10) INSULATED	EA	0
0628-2170	ELECTRICAL SRV TY I 120 / 240 000 (NS) GS (N) GC(0)	EA	0
0624-2140	GROUND BOX TY D (162922) W/APRON	EA	0
1002-6010	LANDSCAPE AMENITY (TY 9)	EA	14
1002-6011	LANDSCAPE AMENITY (TY 10)	EA	21

STATE OF TEXAS
MICHAEL P. MAUER
1510
REGISTERED LANDSCAPE ARCHITECT
MAR 13, 2023

FLATIRON/DRAGADOS LLC

M2L Associates Inc.
Houston, Texas 77024
T: 713-722-8897 F: 713-722-8048
Landscape Architecture
Land Planning Urban Design

Texas Department of Transportation 2016

US 181 HARBOR BRIDGE

SOUTH PARK CIVIC PLAZA Lighting Plan

SHEET 2 OF 2

DESIGN	FED.RD. DIV.NO.	FEDERAL AID PROJECT NO.		HIGHWAY NO.
GRAPHICS	X	(See Title Sheet)		
	STATE	DISTRICT	COUNTY	SHEET NO.
CHECK	TEXAS	CRP	NUECES	D402
CHECK	CONTROL	SECTION	JOB	
	0101	06	095	104

GRADING NOTES

A. CONTRACTOR TO VERIFY THE LOCATION AND CONDITIONS OF ALL UNDERGROUND UTILITIES IN THE FIELD.
B. ALL LANDSCAPE BERMS SHALL BE GRADED IN A SMOOTH AND CONTINUOUS MANNER WITH NO ABRUPT GRADE TRANSITIONS .
C. LANDSCAPE BERM ROUGH GRADING ELEVATIONS SHALL BE ±2" BELOW FINISHED GRADE TO ALLOW FOR INSTALLATION OF TOPSOIL DRESSING AND TURF SODDING/HYDROSEEDING.
D. CONTRACTOR TO VERIFY EXISTING PROPERTY CORNER ELEVATIONS AND SITE BENCH MARKS SPOT ELEVATIONS IN THE FIELD. NOTIFY LANDSCAPE ARCHITECT IF DISCREPANCIES ARE PRESENT THAT WOULD OTHERWISE AFFECT THE PROPOSED LANDSCAPE GRADING DESIGN.
E. LANDSCAPE AREAS SHALL DRAIN AT A MINIMUM SLOPE OF 2%, 1% FOR CONCENTRATED SWALES OR AS NOTED ON THE DRAWINGS. HARDSCAPE AREAS SHALL DRAIN AT A MINIMUM SLOPE OF 1% TO A MAXIMUM OF 5%. CROSS SLOPES FOR SIDEWALKS SHALL NOT EXCEED 2%.
F. CONSTRUCTED PAVEMENT AREAS SHALL NOT HAVE MORE THAN 1/8" HIGH STANDING WATER IN A 10'-0" AREA.
G. CONTRACTOR TO PROTECT EXISTING TREES THAT FALL WITHIN OR ADJACENT TO SITE GRADING ACTIVITIES. TREE PRESERVATION DEVICES SHALL BE INSTALLED AND MAINTAINED FOR THE DURATION OF THE CONSTRUCTION PERIOD. **SEE TREE PRESERVATION DETAILS, SHEET 1 OF 1**
H. ALL RIGHTS-OF-WAY SHALL DRAIN TO PUBLIC STREET, ALL OTHERS AREAS TO DRAIN INTERNALLY UNLESS OTHERWISE NOTED ON THE DRAWINGS.
I. CONTRACTOR SHALL IMPORT OFF-SITE FILL MATERIAL AS NECESSARY TO CREATE LANDSCAPE BERMS OR STOCKPILE FROM ON-SITE SOURCES IF AVAILABLE..
J. REFER TO CIVIL ENGINEERING DRAWINGS FOR ROADWAY PAVEMENT AND SIDEWALK ELEVATIONS. COORDINATE AND MAKE ADJUSTMENTS AS NEEDED ADJACENT TO EXISTING PAVEMENT AREAS.
K. PAY ITEMS - ALL ROUGH/FINE GRADING, CUTTING, EMBANKMENT, IMPORTED FILL, WASTE MATERIAL DISPOSAL, TREE PRESERVATION, DEMOLITION, AND MISCELLANEOUS COSTS FOR SITE PREPARATION AND GRADING IS INCIDENTAL AND NOT PAID FOR SEPARATELY.

PLAN NOTES

1. DRAINAGE CROSSING. **SEE DETAIL #3 SHEET LD103, 3 OF 10**
2. COORDINATE TRANSITION TO EXISTING RAMPS AND SIDEWALKS, **SEE CIVIL ENGINEERING DRAWINGS**

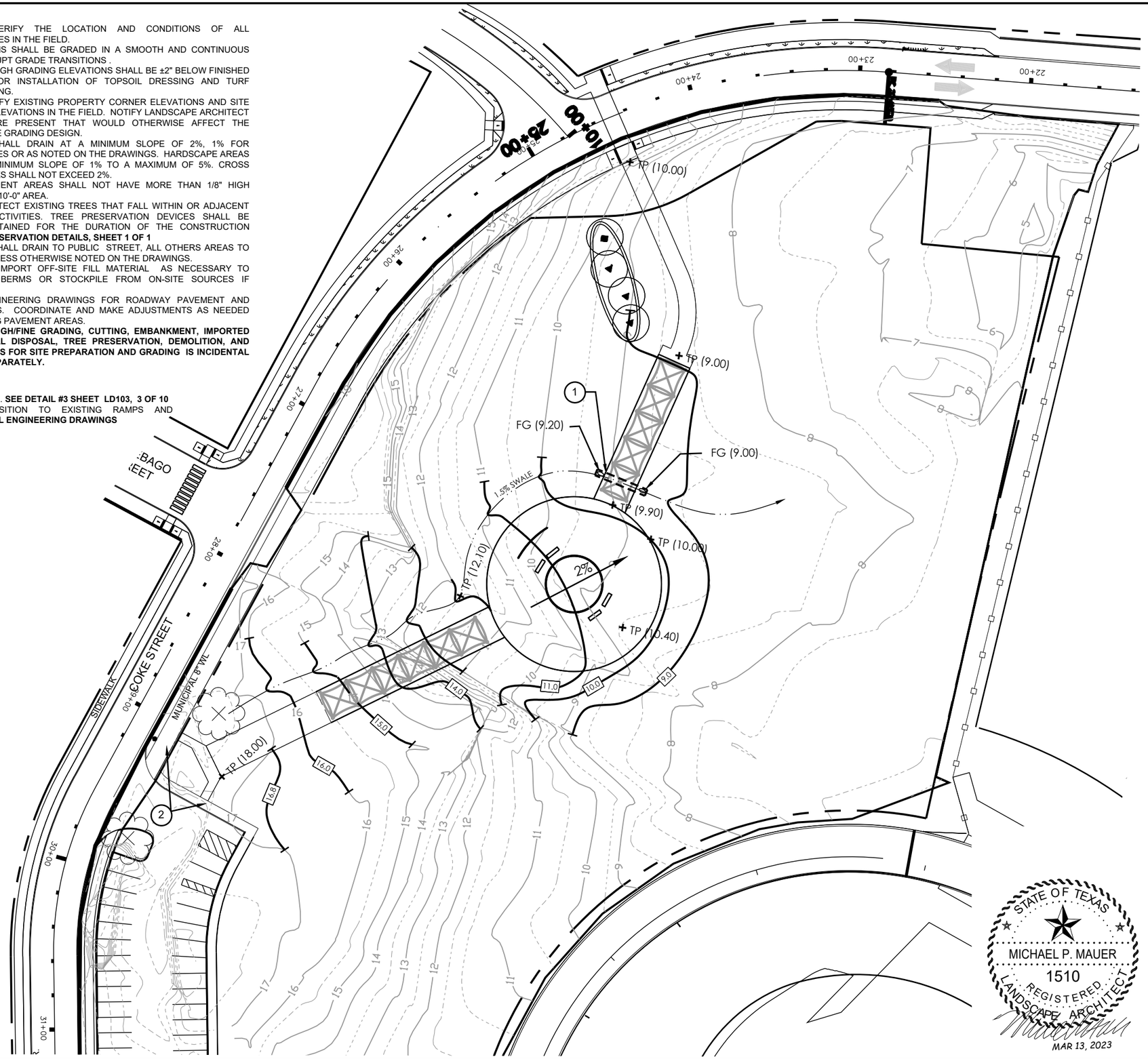

GRADING LEGEND			
+ TW	TOP OF WALL		DRAIN PIPE UNDER FALL SURFACE
+ TF	TOP OF FOOTING		
+ TC	TOP OF CURB		PROPOSED STORM SEWER SEE CIVIL DRAWINGS)
+ BC	BOTTOM OF CURB		
+ TP	TOP OF PAVEMENT		SWALE
+ FG	FINISH GRADE		
+ FFS	FINISH FALL SURFACE TOP		SURFACE FLOW
+ FFG	FINISH FALL SURFACE BOTTOM		
+ FL	FLOW LINE		
+ TG	TOP OF GRATE/RIM		PERFORATED DRAIN PIPE (1% FLOW LINE SLOPE
+ HP	HIGH POINT		
AD	PROP. INLET DRAIN. (SEE CIVIL DRAWINGS)		TRENCH DRAIN
JB	JUNCTION BOX (SEE CIVIL DRAWINGS)		PROPOSED CONTOUR LINE
	MANNHOLE		
PP	POWER POLE	84	EXISTING CONTOUR LINE
+ TR	TOP OF RAMP		
+ BR	BOTTOM OF RAMP		EXISTING TREE
+ TS	TOP OF STEP		
+ BS	BOTTOM OF STEP		
+ 75.60	EXISTING ELEVATION		
+ (75.60)	PROPOSED ELEVATION		

N

0 10 30 60
SCALE 1" = 60'

FLATIRON/DRAGADOS LLC

M2L Associates Inc.
Houston, Texas 77024
T: 713-722-8897 F: 713-722-8048
•Landscape Architecture•
•Land Planning• Urban Design •

Texas Department of Transportation ® 2016

US 181 HARBOR BRIDGE

SOUTH PARK CIVIC PLAZA Grading Plan

SHEET 1 OF 1

STATE OF TEXAS
MICHAEL P. MAUER
1510
REGISTERED LANDSCAPE ARCHITECT
MAR 13, 2023

DESIGN	FED.RD. DIV.NO.	FEDERAL AID PROJECT NO.		HIGHWAY NO.
GRAPHICS	X	(See Title Sheet)		
	STATE	DISTRICT	COUNTY	SHEET NO.
CHECK	TEXAS	CRP	NUECES	D501
CHECK	CONTROL	SECTION	JOB	
	0101	06	095	105

TYPE OF WORK

ITEMS AND REQUIREMENTS FOR EACH TYPE OF WORK

Reference Item 161, 162, 164, 166, 168 of the Texas Standard Specifications for Construction and Maintenance of Highways, Streets and Bridges 2014 for specifications, dimensions, volumes and measurements that are not shown. Use latest Corpus Christi District, Special Provisions for those items indicated.

	PERMANENT SEEDING	TEMPORARY SEEDING			
	✓		161-6012 GENERAL USE COMPOST	APPLICATION RATE Item 161.2.1. General use compost, apply in 1 layers and till into 4" of existing soil	Item 161.2. Materials. Submit quality control (QC) documentation to the Engineer. Compost producer's STA certification must be dated to meet STA requirements (certification must be within 30 or 90 days per STA requirements). Lab analysis performed by an STA-certified lab must be dated within 30 days before delivery of the compost.
	✓		164-6057 PERMANENT CELLULOS FIBER SEEDING SY	GRASS SPECIES Item 164.2. Materials. Jan. 1 - May 1: Green Sprangletop (Leptochloa dubia) - 0.3 lbs PLS/acre; Sideoats Grama (Bouteloua curtipendula) - 3.6 lbs PLS/acre; Hulled - Bermudagrass (Cynodon dactylon) - 2.4 lbs PLS/acre; Buffalograss(Texoka) - 1.6 lbs PLS/acre	Item 164.2.4.2 Cellulose Fiber Mulch Use only cellulose fiber mulches that are on the Approved Products List, Erosion Control Approved Products. (http://www.txdot.gov/business/resources/erosion-control.html) Submit one full set of manufacturer's literature for the selected material. Keep mulch dry until applied. Do not use molded or rotted material.
	✓		164-6066 DRILL SEEDING(PERM)(WARM OR COOL) SY Item 164.1. Description Provide and install seeding as shown on District Standard	PLANTING MONTH / SEED MIX Jan. 1 - May 1: Green Sprangletop (Leptochloa dubia) - 0.3 lbs PLS/acre; Sideoats Grama (Bouteloua curtipendula) - 3.6 lbs PLS/acre; Hulled - Bermudagrass (Cynodon dactylon) - 2.4 lbs PLS/acre; Buffalograss(Texoka) - 1.6 lbs PLS/acre	PLS (Pure Live Seed) Provide documentation of PLS requirements per Item 164.2.1. CONSTRUCTION. Cultivate the area to a depth of 4 inches before placing the seed unless otherwise directed. When performing permanent seeding after an established temporary seeding, cultivate the seedbed to a depth of 4 inches or mow the area before placement of the permanent seed. Plant the seed and place the straw or hay mulch after the area has been completed to lines and grades as shown on the plans. Drill Seeding. Plant seed or seed mixture uniformly over the area shown on the plans at a depth of 1/4 to 1/3 inch using a cultipacker(turfgrass) type seeder. Plant seed along the contour of the slopes. Use broadcast seeding method where site conditions prevent drill seeding method. Broadcast Seeding. Distribute the dry seed or dry seed mixture uniformly over the areas shown on the plans using hand or mechanical distribution on top of soil.
		✓	164-6051 DRILL SEED(TEMP)(WARM OR COOL) SY Item 164.1. Description Provide and install seeding as shown on District Standard	PLANTING MONTH / SEED MIX March, April, May, June, July, August, September, October: Foxtail Millet (Setaria italica) - 34.0 lbs PLS/acre	
		✓	164-6009 BROADCAST SEED(TEMP)(WARM) SY Item 164.1. Description Provide and install seeding as shown on District Standard	November, December, January, February,: Oats (Avena sativa - 72.0 lbs PLS/acre	
	✓	✓	162-6003 STRAW OR HAY MULCH SY	APPLICATION RATE Immediately after planting the seed or seed mixture, apply straw or hay mulch uniformly over the seeded area. Apply straw or hay mulch at 2 tons per acre. Use tacking agent with straw or hay mulch as described on this sheet.	Use straw or hay mulch in conformance with Article 162.2.5, "Mulch." Use biodegradable tacking agents only applied at a rate in accordance with manufacturer's recommendations. Use the following products or an approved equal(see note this sheet): Conweb/Contac Guar Gum, Profile Products Corporation, (307) 655-9565, Ramtec/Procol/Viscol Guar Gum, Ramtec Corporation, (800) 366-1180
✓	✓	✓	166-6001 FERTILIZER AC Item 166.2. Materials Use fertilizer as shown on District Standard	APPLICATION RATE Deliver and evenly distribute fertilizer at a rate of 4000 lbs/acre.	Use a NON-CHEMICAL fertilizer which meets all the following criteria: (1) BRAND NAME must be registered with the Texas State Chemist as a commercial fertilizer. (2) Meets USEPA guidelines for unrestricted use. (3) Derived from biological sources such as, but not limited to: sewage sludge, manures, vegetation, etc. (4) In granular form and essentially dust free. Submit proof of registration and nutrient source to Engineer. Use the following products or an approved equal(see note this sheet): Sigma, SIGMA AgriScience, 281-851-6749 Sustanite-standard grade, Automation Nation, Inc., 713-675-4999 Milorganite, MMSD, 800-287-9645 Agricultural Organic P/L, Ag Org, INC., 713-523-4396
✓	✓	✓	168-6001 VEGETATIVE WATERING MG	APPLICATION RATE Item 168.3 Construction. 6000 gallons/acre per working day X 20 consecutive working days = 120,000 gallons total/acre	Begin watering immediately after installation of seed or sod. Replace, fertilize, and water any seed or sod in poor condition due to the failure to apply the specified amount of water within the time allowed at no expense to the Department.

SEQUENCE OF WORK

BLOCK SOD	PERMANENT SEEDING	TEMPORARY SEEDING
1.FERTILIZER 2.CULTIVATE SOIL (ITEM 162.3) 3.SOD 4.VEGETATIVE WATERING	1.FERTILIZER 2.COMPOST MANUFACTURED TOPSOIL 3.CULTIVATE SOIL (ITEMS 164.3 AND 161.3.1) 4.PERMANENT SEEDING 5.STRAW OR HAY MULCH 6.VEGETATIVE WATERING	1.FERTILIZER 2.CULTIVATE SOIL (PER ITEM 164.3) 3.TEMPORARY SEEDING 4.STRAW OR HAY MULCH 5.VEGETATIVE WATERING

04/06/20201

STATE OF TEXAS
MICHAEL P. MAUER
1510
REGISTERED
LANDSCAPE ARCHITECT

© 2014

Texas Department of Transportation

HOUSTON DISTRICT

FERTILIZER, SEED, SOD,
STRAW, COMPOST, AND WATER (MOD)

SHEET 1 OF 1
(P 101)

FILE:	FED DIV	STATE	PROJECT NUMBER			SHEET
FILE:	X	TEXAS	(See Title Sheet)			106
ORIGINAL:	DIST	COUNTY	CONTROL	SECT	JOB	HIGHWAY
	CRP	NUECES	0101	06	095	

4" thick layer erosion control compost over entire critical root zone. See notes this sheet.

Protective fence and posts located at the edge of the critical root zone. See notes this sheet.

Protective filter berm. Completely enclose critical root zone. See notes and detail this sheet.

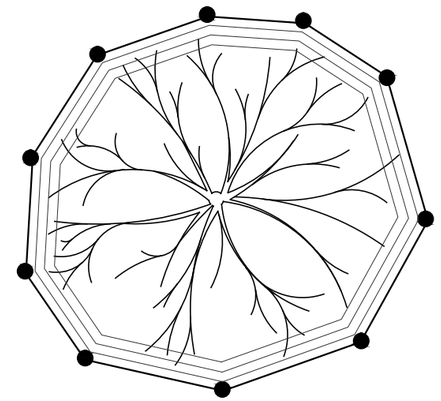

PLAN VIEW OF INDIVIDUAL TREE AND PROTECTIVE FENCE

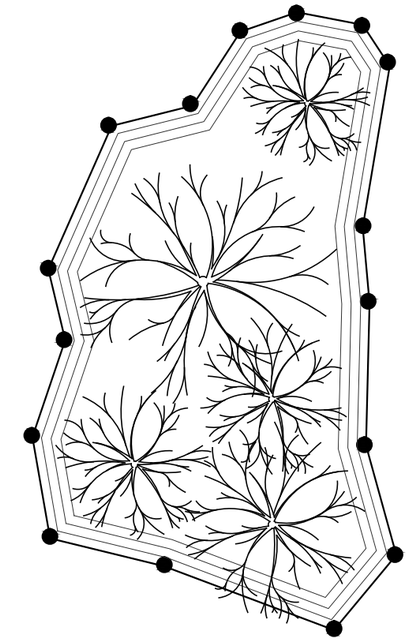

PLAN VIEW OF TREE GROUP AND PROTECTIVE FENCE

STATE OF TEXAS
MICHAEL P. MAUER
1510
REGISTERED
LANDSCAPE ARCHITECT
04/06/2021

Bound wood planking, see notes this sheet.

4" thick layer erosion control compost over entire critical root zone. See notes this sheet.

Undisturbed grade to protective fence. See notes this sheet.

Protective filter berm. Completely enclose critical root zone. See notes and detail this sheet.

Preferred fence location. Protective fence and posts located at the edge of the critical root zone. See notes this sheet.

DRIPLINE
outer edge of tree limbs

Fence location in constricted areas.

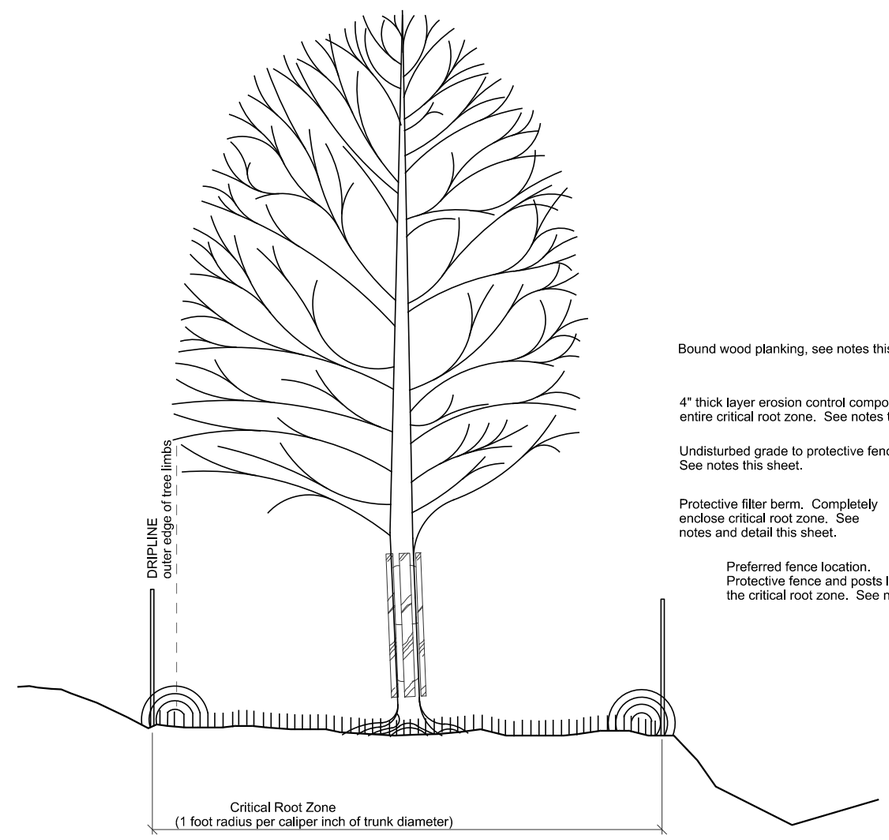

Critical Root Zone
(1 foot radius per caliper inch of trunk diameter)

TYPICAL TREE PROTECTION

PAY ITEMS: (ALL TREE PRESERVATION REQUIREMENTS ARE CONSIDERED INCIDENTAL AND NOT PAID FOR SEPARATELY INCLUDING, BUT NOT LIMITED TO; GENERAL TREE PROTECTION, EROSION CONTROL COMPOST, FENCING, VEGETATIVE WATERING, WATER COSTS, AND MISCELLANEOUS FEES AND EXPENSES.

© 2014

Texas Department of Transportation
HOUSTON DISTRICT

TREE PROTECTION

SHEET 1 OF 1
(P 102)

Details not to scale

FILE:	FED DIV	STATE	PROJECT NUMBER			SHEET
	X	TEXAS	(See Title Sheet)			107
REVISED:	DIST	COUNTY	CONTROL	SECT	JOB	HIGHWAY
	CRP	NUECES	0101	06	095	

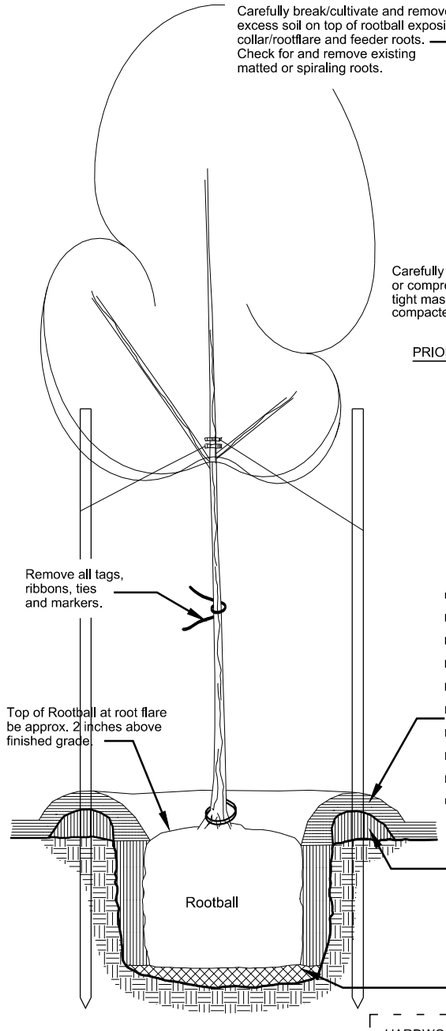

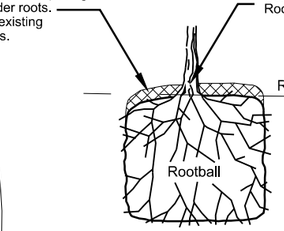

Carefully remove from container. Check for tightly bound or compressed roots. Carefully pull roots away from the tight mass and spread prior to planting. Extremely woody compacted roots may require cutting to open root system.

PRIOR TO PLACING ROOTBALL IN HOLE

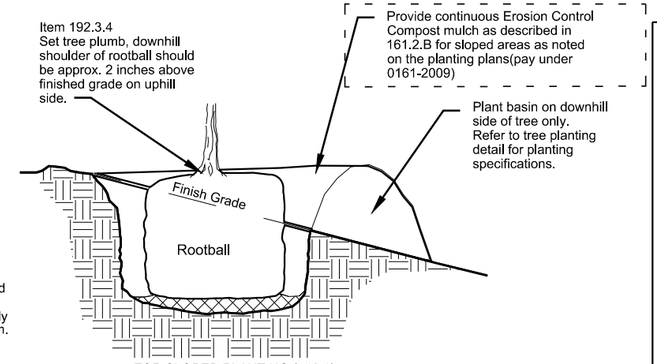

FOR SLOPED PLANTING (>10:1)

PLANT SUPPORT INSTALLATION Item 192.3.10
Submit plant support system detail to engineer for approval. Replace approved plant support system if fails or if causes any damage to plant material. Stake in the direction of the prevailing winds, multiple ties may be required.

PLANT INSTALLATION , Item 192.3.5
Set tree plumb, shoulders of rootball should be approximately 2 inches above finished grade.

SOIL AMENDMENTS
Fertilizers, Root stimulators, and other Soil Amendments at time of planting and subsequent maintenance applications shall be paid for under the appropriate Landscape Soil Amendment category. Trees - Pay item 1009-2002, Shrubs and Ground Covers - Pay item 1009-2005.

TREE GROVE PREPARATION
At time of initial planting, two (2) inch layer of General Use Compost to be used as a top dressing for tree grove area and tilled to a depth of 12". General Use compost shall be paid for under 0161-2012 for tree grove area. Apply 4" of 100% hardwood bark mulch over entire tree grove area. DO NOT PLACE BACKFILL MIX OVER TOP OF TREE ROOT BALL. Initial and subsequent maintenance top dressings shal be paid for under 0192-2012. Plant bed prep for Tree Grove, including tree pit, shall be paid for under 0192-20163.

TREE PIT PREPARATION
Excavate additional depth/width for tree pit. Backfill mix for tree pit shall consist of 70% of existing soil removed from the plant pit and 30% General Use Compost (GUC) as described in 161.2.3. When used as a backfill mix and bed preparation under item 192, GUC is incidental to this item and not paid for separately.

SHRUB AND GROUND COVER PREPARATION
At time of initial planting, four (4) inch layer of General Use Compost to be used as a top dressing for planting bed areas and tilled to a depth of 12". General Use compost shall be paid for under 0161-2012 for tree grove area. Apply 4" of 100% hardwood bark mulch over planting bed area. Initial and subsequent maintenance top dressings shall be paid for under 0192-2012. Plant bed prep for shrub and ground covers shall be paid for under 0192-2065. General use compost for plant bed prep is incidental and not paid for separately

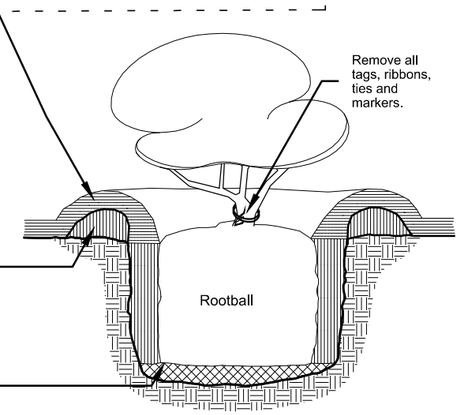

Plant Basin Construction, Item 192.3.6

Plant Pit Excavation, Item 192.3.4
Complete planting bed preparation before excavation.

Existing soil, see planting bed preparation detail sheet.

One (1) inch layer of compacted backfill, see "Plant Installation" this detail.

TREE PLANTING DETAIL

FOR PALM TREE PLANTING DETAIL SEE PLANTING AND ESTABLISHMENT SHEET 2 of 7

HARDWOOD BARK MULCH TOP DRESSING (AS APPROVED BY LANDSCAPE ARCHITECT)

1. Raw materials and feedstock: Virgin yard trimmings and vegetation - includes grass clippings, leaves, branches, trees, pine needles, native woods.
2. Pallets, treated lumber, plastics, and other construction debris shall not be used in production
3. Raw materials aged for a minimum of 3 to 6 months in a windrow configuration.
4. First Grind: Aged raw materials shall go through a 1st grind with a 6"X9" screen then aged in a windros for a minimum of 3 months - internal windrow temperatures shall range from 150 to 170 degrees F.
5. Second Grind: Aged 1st grind materials shall pass through a 2nd grind process with a 1.5" screen.

SHRUB AND VINE PLANTING DETAIL

VEGETATIVE WATERING SCHEDULE FOR TREES, SHRUBS, VINES

(NOT COVERED BY AN AUTOMATED IRRIGATION SYSTEM)

PHASE	ITEM DESCRIPTION	FREQUENCY	RATE / PLANT
Item 192.3 Construction	Item 192.3.7. Watering is incidental to Item 192 and is not paid for separately See Initial Watering note	Begin same day as planting then: 3 times per week with 1 day minimum between waterings See Initial Watering note	CNTR SIZE / WATER QTY 30 GAL = 16 gallons 15 GAL = 10 gallons 5 GAL = 4 gallons 3 GAL = 2 gallons 1 GAL = 2 gallons (1/2 X plant CNTR gallon size per plant for sizes not shown, one (1) gallon minimum) See Initial Watering Note
Item 192.3.15 Maintenance	Item 192.3.15.1. Watering is incidental to Item 192 and is not paid for separately		
Item 193 Landscape Establishment (When Shown In Plans)	Item 193.3.3. Watering is incidental to Item 193 and is not paid for separately	2 times per week with 2 days minimum between waterings	

FOR VEGETATIVE WATERING FOR PALMS(If Applicable) ONLY SEE PLANTING AND ESTABLISHMENT SHEET 2 of 7

NOTES:
Apply water over the rootball within the tree well only, unless otherwise shown on plans. Adjust rate and frequency to meet site conditions and weather as approved or directed by engineer.

Plant material in poor condition due to the failure to apply the specified amount of water within the time allowed or overwatering will be replaced at contractor's expense.

PROVIDE MONTHLY METER READINGS OF WATER APPLIED.

Prior to arrival at project or storage area, provide watering plan(s) of plants to be installed or stored. Watering plan(s) must be approved by engineer prior to delivery to project or storage area.

INITIAL WATERING AND ROOT STIMULATOR REQUIREMENTS

PHASE	Item 192.3 Construction. Initial watering.
ITEM DESCRIPTION	Item 192.3.5. Plant Installation. Root stimulator material is incidental to Item 192 and is not paid for separately.
MATERIALS and SOLUTION	Two (2) ounces of root stimulator concentrate per one (1) gallon water. Root stimulator must be commercially available and labeled as an all organic/non-chemical liquid concentrate Bio-Stimulant and Root Stimulator. Use the following product or an approved equal: Super Seaweed, San Jacinto Environmental Supplies, 713-957-0909.
FREQUENCY and RATE	At the time of planting, provide initial watering at rate shown in Vegetative Watering Schedule this sheet. Use root stimulator solution for initial watering.

GENERAL PLANTING NOTES:

1. Reference Item 192 of the Texas Standard Specifications for Construction and Maintenance of Highways, Streets, and Bridges 2014 for specifications, dimensions, volumes, and measurements not shown.
2. Reference Item 192.3, mark plant locations and bed outlines.
3. Verify that all planting meets the following clear zone minimum distance requirements from the edge of the travel lane:
   * Trees: 30' from edge of pavement, curb, and/or barrier,
   * Shrubs: 15' from edge of pavement, curb, and/or barrier,
   * Groundcovers and vines: from edge of pavement, curb, and/or barrier,

   Engineer has final authority over all clear zone related issues.
4. Locate and stake all underground conduits and utilities associated with but not limited to: CTMS, CTMS power supply, lighting, signal wires and detectors, gas, electric, telephone, fiber optics, etc.
5. Locate and stake existing ground boxes, inlets, culverts, manholes, etc. within the project area with a 4' wooden stake painted orange. Maintain the stakes in place for duration of the contract. Remove stakes when directed by engineer.
6. Reference Item 5.10 Inspection of the Texas Standard Specifications for Construction and Maintenance of Highways, Streets, and Bridges 2014. At any time during all phases of the contract, any materials or work performed not in accordance with the plans and specifications will be replaced and/or reworked until in compliance.
7. Any adjustments due to the failure to comply with plans andspecifications shown will be at contractors expense.
8. See planting and establishment sheet 4 and 5 of 7 for additional planting bed and soil ammendment requirements

STATE OF TEXAS
MICHAEL P. MAUER
1510
REGISTERED
LANDSCAPE ARCHITECT

04/06/2021

NOTE: INDIVIDUAL TREE OR SHRUB PLANTING IS NOT ALLOWED

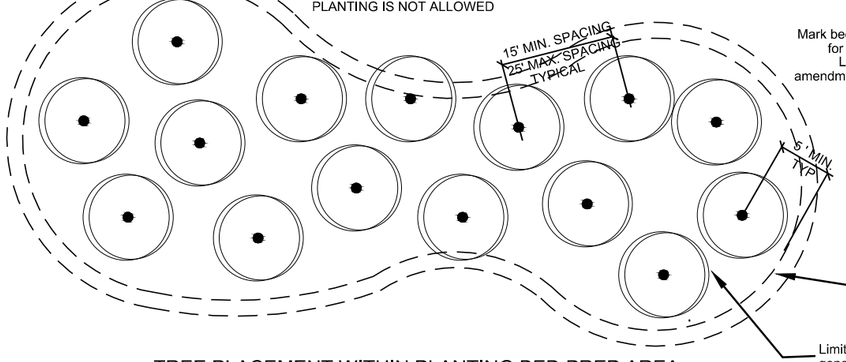

Mark bed outlines as described in Item 192.3. for review by the Landscape Architect
Limits of tree grove plant bed prep area, soil amendments, and mulch treatments is the proposed landscape curb or hardscape edge

18" wide x 6" deep, reinforced concrete landscape curbing typical around entire planting bed unless bed is a curb, roadway edge, wall, or barrier. Planting bed layouts shall be curvalinear and not angular as noted on the planting and layout plans.
Landscape curbing shall be paid for under 0528-6033

Limits of plant bed prep, soil amendments. general use compost, hardwood bark mulch, and erosion control compost is concrete mow strip

TREE PLACEMENT WITHIN PLANTING BED PREP AREA, LAYOUT AND SPACING SHOWN ON PLANS

S= Spacing as indicated on the plans. Square or triangular spacing will be shown by the placement of the plants on the drawing and/or be called out in the plant label.

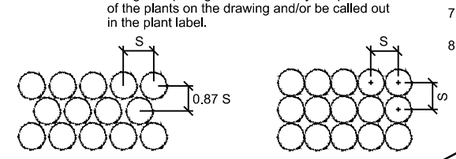

TRIANGULAR SPACING

SQUARE SPACING

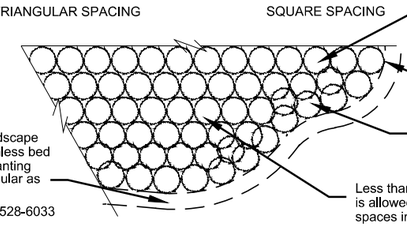

Continuous mulch/compost cover

Limits of plant bed prep, soil amendments. and mulch top dressing is Concrete Landscape Curbing or harsdcape edge

Plant edge of bed with one continuous row of plants at designated spacing. setback from landscape curbing one spacing unit.

Less than specified spacing is allowed to infill odd spaces in bed.

SHRUB AND VINE PLACEMENT WITHIN PLANTING BED PREP AREA
LAYOUT AND SPACING SHOWN ON PLANS

Texas Department of Transportation
©2014
HOUSTON DISTRICT

PLANTING AND ESTABLISHMENT (MOD)

SHEET 1 of 7
(P 103)

Details not to scale

TREE & SHRUB

FILE:	FED DIV	STATE	PROJECT NUMBER			SHEET
	X	TEXAS	(See Title Sheet)			108
	DIST	COUNTY	CONTROL	SECT	JOB	HIGHWAY
	CRP	NUECES	0101	06	095	US-181

Symb		Botanical Name	Common Name	Color	*Qty	Root Condition	Caliper	Height	Spread	Spacing	Remarks
		TREES									
T1	△	Taxodium mucronatum	Mexican Bald Cypress	N/A	**57**	65 gal, Container	3" Cal.	12' - 14'	6' - 8'		
T2	○	Cordia boissieri	Wild Olive	White	**30**	65 gal, Container	3" Cal.	10' - 12'	6' - 8'		
T3		**NOT USED**									
T4	◻	Vitex agnus-castus	Lavender Tree	Purple	**64**	65 gal, Container	3" Cal.	8' - 10'	5' - 6'		Multi-trunk, (min 4) 1" caliper
T5	■	Ehretia anaqua	Anaqua	White	**59**	65 gal, Container	3" Cal.	10' - 12'	6' - 8'		
T6	●	Platanus mexicanus	Mexican Sycamore	N/A	**124**	65 gal, Container	3" Cal.	12' - 14'	6' - 8'		
T7	▲	Quercus polymorpha	Mexican White Oak	N/A	**106**	65 gal, Container	3" Cal.	12' - 14'	6' - 8'		
		PALMS									
P1	✳	Sabal texana	Sable Palm	N/A	**6**	Bare Root		10-12 ft trunk height			
		SHRUBS									
S1		Eriobotrya japonica 'Coppertone'	Coppertone Loquat	Pink/white	**370**	3 gal, Container	N/A			36 in O.C.	
S2		Caesalpinia gilliesii	Bird of Paradise	Orange	**830**	3 gal, Container	N/A			36 in O.C.	
S3		**NOT USED**									
S4		**NOT USED**									
S5		Rhaphiolepis x 'Monic'	Majestic Beauty Hawthorne	Pink/white	**200**	3 gal, Container	N/A			36 in O.C.	
S6		**NOT USED**									
S7		Nerium Oleander 'Petite Pink'	Petite Pink Oleander	Pink	**545**	3 gal, Container	N/A			36 in O.C.	
S8		**NOT USED**									
S9		Callistemon citrinus 'Little John'	Little John Dwarf Bottlebrush	Red	**855**	3 gal, Container	N/A			36 in O.C.	
S10		Carissa macrocarpa	Natal Plum	White	**1350**	3 gal, Container	N/A			36 in O.C.	
		VINE/GROUND COVER									
G1		Lantana montevidensis	Trailing Lantana	Purple	**200**	3 gal, Container	N/A			30 in O.C.	
G2		Pudocarpus macrophyllus 'Pringles Dwarf'	Dwarf Japanese Yew	N/A	**175**	3 gal, Container	N/A			36 in O.C.	
G3		Wedelia trilobata	Wedelia	Yellow	**0**	3 gal, Container	N/A			24 in O.C.	
G4		Lantana urticoides	Texas Lantana	Orange	**40**	3 gal, Container	N/A			36 in O.C.	
G5		Rosminarus officinalis 'Prostratus'	Creeping Rosemary	Purple	**160**	3 gal, Container	N/A			30 in O.C.	
G6		**NOT USED**									
G2		**NOT USED**									
G8		**NOT USED**									
G9		Hesperaloe parviflora	Red Yucca	Red	**625**	3 gal, Container	N/A			36in O.C.	
G10		**NOT USED**									
		ORNAMENTAL GRASSES									
GR1		**NOT USED**									
GR2		**NOT USED**									
GR3		Pennisetum setaceum rubrum	Purple Fountain Grass	N/A	**300**	3 gal, Container				36in O.C.	
GR4		Pennisetum setaceum	Fountain Grass	N/A	**700**	3 gal, Container				36in O.C.	
GR5		**NOT USED**									
GR6		Muhlenbergia cappilaris	Gulf Coast Muhly	N/A	**825**	3 gal, Container				36in O.C.	
GR7		Muhlenbergia Linderheimeri	Big Muhly	N/A	**625**	3 gal, Container				36in O.C.	

**** Material Quantities are provided for reference only, Contractor shall install plant material quantities as shown on the plans and verify all quantities.***

PLANT SPECIFICATION NOTES:

1. Reference Item 192 of the Texas Standard Specifications for Construction of Highways, Streets and Bridges 2014 for specifications, dimensions, volumes and measurements that are not shown.
2. All plants must be nursery grown in containers unless otherwise shown on plans.
3. Provide photographs of plant material when requested by engineer and landscape architect.
4. Properly handle and maintain plants during delivery, handling, storage, and planting. The engineer and landscape architect may inspect any phase of work and may reject any plant material improperly handled and/or maintained.
5. DELIVERY NOTICE. Reference Item 192.3.2 plant delivery. Provide 48 hour notice of proposed plant material delivery prior to arrival at project or storage area.
6. DELIVERY TICKETS. For each plant material shipment, provide invoice showing the number, size, and name (common and botanical) of each of the species of plant material.
7. WATERING PLAN(S). Prior to arrival at project or storage area, provide watering plan(s) of plants to be installed or stored. Watering plan(s) must be approved by engineer and landscape architect prior to delivery to project or storage area.

STATE OF TEXAS
MICHAEL P. MAUER
1510
REGISTERED
LANDSCAPE ARCHITECT
3/13/2023

©2014

Texas Department of Transportation
HOUSTON DISTRICT

PLANTING AND ESTABLISHMENT (MOD)
SHEET 2 of 7
(P 105)

PLANT SPECIFICATIONS

FILE:	FED DIV	STATE	PROJECT NUMBER				SHEET
	X	TEXAS	(See Title Sheet)				109
REVISIONS:	DIST	COUNTY		CONTROL	SECT	JOB	HIGHWAY
	CRP	NUECES		0101	06	095	US-181

ITEMS AND REQUIREMENTS FOR EACH TYPE OF WORK

Reference Item 161, 192 of the Texas Standard Specifications for Construction and Maintenance of Highways, Streets and Bridges 2014 for specifications, dimensions, volumes and measurements that are not shown. Reference Special Specification Item 1009.

TYPE OF WORK						
TREES 192-2063 PLANT BED PREP (TYPE I) SY	NOT USED	SHRUBS/GC 192-2065 PLANT BED PREP (TYPE III) SY	BROADCAST 192-2066 PLANT BED PREP (TYPE IV) SY			
✓		✓	✓	161 – 6012 GENERAL USE COMPOST CY	APPLICATION RATE Item 161.2.C. General Use Compost. Apply 2 in. uniform layer over TYPE I planting bed prior to rip trenching Apply 4 in. unifor layer over TYPE III planting bed prior to tilling in. Apply 1 in. uniform layer over TYPE IV planting bed prior to tilling in.	Item 161.2. Materials. Compost producer's STA certification must be dated to meet STA requirements (certification must be within 30 or 90 days). Lab analysis performed by an STA–certified lab must be dated within 30 days before delivery of the compost.
✓				1009–2002 LANDSCAPE SOIL AMENDMENT (TYPE I) EA Trees Only at Time of Installation	APPLICATION RATE Apply three (3) packets(3 ounces each) into backfill mix at time of initial installation for each tree.	USE A NON–CHEMICAL FERTILIZER WITH THE FOLLOWING REQUIREMENTS; (1) Includes bio–stimulant additives of Kelp, Humates, Yucca, Amino Acids, Plant Hormones, natural sugars, as well as beneficial bacteria. (2) Derived from the following natural, biological sources. (3) Includes slow release water absorbing polymer (4) Use the following product or approved equal JRM Mycorrhizal Innoculants with polymer additive, Distributed by San Jacinto Environmental Supplies, 713–957–0909.
			✓	1009–2003 LANDSCAPE SOIL AMENDMENT (TYPE II) SY Turf Only	APPLICATION RATE Apply 0.20 lbs/SY. (20 lbs per 1,000 Square Feet) at time of initial installation, after scalp mowing and herbiced treatment, prior to seeding or sodding activities.	All organic biological fertilizer 100% slow release, 1.7% Iron, 2.5% Sulfure Non–burning. Pelletized humate without added binders and pass #16 mesh. Use the following product or an approved equal: San Jacinto Humates Plus 0–0–4, San Jacinto Environmental Supplies, 713–957–0909.
✓				1009–2004 LANDSCAPE SOIL AMENDMENT (TYPE III) SY Trees Only	See PLANTING AND ESTABLISHMENT SHEET 5 of 7 For Requirements	
		✓		1009–2005 LANDSCAPE SOIL AMENDMENT (TYPE IV) SY Shrub Only	See PLANTING AND ESTABLISHMENT SHEET 5 of 7 For Requirements	
			✓	0166–2002 FERTILIZER TON Turf Only	APPLICATION RATE Apply 0.20 lbs/SY. (20 lbs per 1,000 Square Feet) Each application is paid for separately. See timeline for multiple applications.	USE A NON–CHEMICAL FERTILIZER WITH THE FOLLOWING REQUIREMENTS; (1) Is registered witha Texas State Chemist as a commercial fertilizer (2) Meets USPEA guidelines for unrestricted use. (3) Derived from the following biological source: process bat guano or as approved. (4) 100% slow release, 2% Iron, that will not burn and is animal safe (5) Pelletized (6) Use the following product or approved equal Microlife Ultimate 6–2–4 manfuactured by San Jacinto Environmental Supplies, 713–957–0909.
✓				RIPPING/TRENCHING Incidental to Item 192 Plant Bed Preparation.	RIP/TRENCH DEPTH Rip/Trench to a depth of 8 inches (+/– 2"). Distance between each rip/trench is 24 inches.	
		✓		ROTOR TILLING Incidental to Item 192 Plant Bed Preparation.	ROTOR TILL DEPTH After application of compost and amendments and rip/trench (when required), rotor till to a depth of +/–8 inches.	
✓		✓	✓	Pre–planting HERBICIDE and MOWING Incidental to Item 192 Plant Bed Preparation. Scalp mow 15 days after final herbicide treatment.	APPLICATION RATE Prior to all other work, apply two applications of an approved herbicide with 15 days between the applications. Apply herbicide during weather conditions and at a rate per manufacturer's recommendations.	

STATE OF TEXAS
MICHAEL P. MAUER
1510
REGISTERED LANDSCAPE ARCHITECT

02/07/2022

GENERAL BED PREPARATION NOTES:

1. Reference Item 192 of the Texas Standard Specifications for Construction and Maintenance of Highways, Streets and Bridges 2014 for specifications, dimensions, volumes and measurements not shown.
2. Locate and stake all underground conduits and utilities associated with but not limited to: CTMS, CTMS power supply, lighting, signal wires and detectors, gas, electric, telephone, fiber optics, etc.
3. Locate and stake existing ground boxes, inlets, culverts, manholes, etc. within the project area with a 4' wooden stake painted orange. Maintain the stakes in place for duration of the project. Remove stakes when directed by engineer.
4. Repair any damage within right of way caused by contractor at no additional expense to the Department.
5. Provide a 1000 SF "mock up" of soil amendment, general use compost, and bed preparation complete and in place within an approved area for approval by engineer.
6. Pick–up litter prior to scalp mow and bed preparation.
7. All concrete, steel, trash, and other debris uncovered during bed preparation work which the engineer determines as detrimental to the project will become the responsibility of the contractor and disposed of in an approved manner. Debris removal will occur daily and will be incidental to bed preparation and will not be paid for separately.
8. Reference Item 5.7 Inspection of the Texas Standard Specifications for Construction and Maintenance of Highways, Streets, and Bridges 2004. At any time during all phases of the contract, any materials or work performed not in accordance with the plans and specifications will be replaced and/or reworked until in compliance.
9. Any adjustments due to the failure to comply with plans and specifications shown will be at contractors expense.

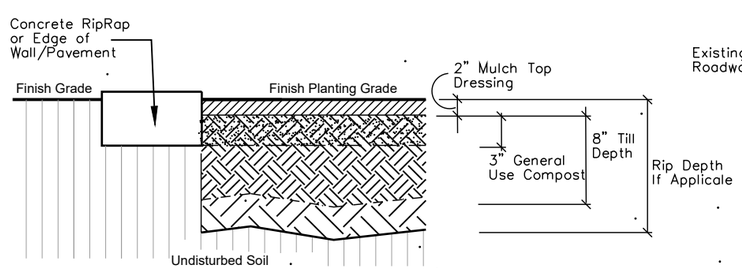

SHRUB GROUND COVER PLANTING BED PREPARATION

SEE ITEMS AND REQUIREMENTS THIS SHEET FOR DIMENSIONS, RATES, AND SPECIFICATIONS

(See Top–of–Slope detail this sheet when applicable).

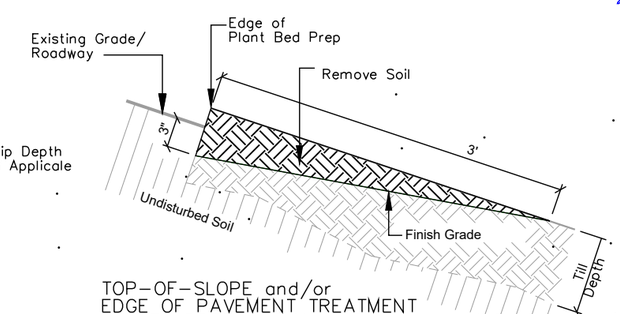

TOP–OF–SLOPE and/or EDGE OF PAVEMENT TREATMENT OF BED PREPARATION AREA (Slopes 4:1 or greater)

Install at all areas with the following conditions:

Within the bed preparation areas at top–of–slope (adjacent to shoulder sections and areas with slotted barrier/curb) and/or at edge of roadway, remove tilled or untilled (TYPE III) soil as shown. Evenly distribute removed soil in a thin layer over adjacent existing tilled or untilled (TYPE III) soil being careful not to create a mound. This work is incidental to Item 192 Plant Bed Prep Preparation.

©2014

Texas Department of Transportation

HOUSTON DISTRICT

PLANTING AND ESTABLISHMENT (MOD)

SHEET 3 of 7
(P 106)

Details not to scale

BED PREPARATION

FILE:	FED DIV	STATE	PROJECT NUMBER			SHEET
	X	TEXAS	(See Title Sheet)			110
REVISIONS:	DIST	COUNTY	CONTROL	SECT	JOB	HIGHWAY
	CRP	NUECES	0101	06	095	US-181

FERTILIZERS AND SOIL AMMENDMENTS FOR TREES, SHRUBS, AND GROUND COVERS

ITEM 1009-2004 LANSDCAPE SOIL AMMENDMENT (TYPE III)

(Each application is paid for separately. See timeline for multiple applications)

MATERIALS REQUIREMENTS

NON-CHEMICAL FERTILIZER WITH THE FOLLOWING REQUIREMENTS;
1. Is registered witha Texas State Chemist as a commercial fertilizer
2. Meets USPEA guidelines for unrestricted use.
3. Derived from the following biological source: process bat guano or as approved.
4. Contains a minimum of 8.0% nitroge(4.0% being water insoluble, 6.0% phosphate)
5. Mix into top 6"-8" of backfill mix for each tree, shrub, and groun cover at time of installation, subsequent treatments shall be applied to entire planting area.
6. Use the following product or approved equal
   * Microlife Ultimate 8-4-6 manufactured by San Jacinto Environmental Supplies, 713-957-0909.

ROOT STIMULATOR/FOLIAER SPRAY;
1. Meets USPEA guidelines for unrestricted use.
2. Comprehensive
3. Apply at a rate of 2 ounces per gallon of water for +/- 8 ounces per 1,000 square foot.
4. Apply to root mass of plant material and soak at time of installation, subsequent applications shall be applied as a foliar spray for trees, shrubs, and ground covers.
5. Use the following product or approved equal
   * Ocean Harvest 4-2-3 distributed by San Jacinto Environmental Supplies, 713-957-0909.

EQUIPMENT REQUIREMENTS FOR LIQUID INGREDIENTS

For each batch use a delivery tank verified for overall cleanliness, to be free of residue soil, compost, or stains. Tank shall then be rinsed with clean, non-chlorinated, or non-chloramines treated wll water before filling with required ingredients. All equipment used for application of liquid ingredients must never been used or will not be used with any non-organicconventional inorganic fertilizers or chemical herbicides or pesticides. Contractor must submit written verification to this condition.

Tank shall be equipped with two, 2-inch quick coupler type fittings capable of coupling, without leaks. All lines and fittings should have quick couplers at every junction. Ninety (90) degree bend fittings should be avoid for quick clean-out and verification of cleanliness.
.

TRANSPORT, STORAGE AND APPLICATION REQUIREMENTS

Delivery tank must be equiped with an operating circulation pump of a low velocity, high volume pump or diaphragm or centrifugal design.

Injectors capable of penetrating four (4) inches into soil and/or root-balls as manufactured by LESCO Deeproot Feeder or approved equal.

Delivery tank must be equipped with an operating aeration system.

Dissolved oxygen meter.

Liquid ingredients with additive solution must be circulated for five (5) minutes per five hundred (500) gallons of material every three (3) hours. Liquid additives solution must be continuously aerated from the time of manufacturer through complete application. All solutions must be applied within 24 hours, or new material must be sources. Solutions not applied within 24 hours after mixing shall not be allowed and must be discarded.

CONSTRUCTION METHODS AND APPLICATION RATES

TREES ONLY AT TIME OF INSTALLATION;
1. Contractor shall layout all planting beds and prepare planting pits for trees as per the requirements of Planting Bed Preparation, Planting and Establishment Sheet 4 of 7.
2. Prepare root mass of planting material as per Planting and Establishment Sheet 4 of 7.
3. Apply liquid root stimulator to soak entire root ball
4. Apply Mycorhizza amendment to the planting pit and incorporate into the top 6"-8" planting bed backfill mix at the required rate. Pay item LANDSCAPE SOIL AMENDMENT (TYPE I) 1009-2002
5. Install plant material root ball.
6. Incorporate dry, non-chemical fertilizer to backfill mix at the rates specified herein.
7. Apply to root mass of plant material and soak at time of installation, subsequent applications shall be applied as a foliar spray for trees, shrubs, and ground covers.

SUBSEQUENT APPLICATIONS FOR TREES ONLY;
1. Install at intervals as outlined on Planting and Establishment Sheet 7 of 7.
2. Each injected shall equal one square yard of Landscape Soil Amendment (TY III) 1009-2004
3. Deep root fertilization applications shall occur prior to mulch top dressing if applicable.
4. Inject ½ gallon liquid ingredients with additives four (4) inches into the root zone and/or root-ball of each tree. Inject in multiple locations around the approximate root zone & 18" o.c.

ITEM 1009-2005 LANSDCAPE SOIL AMMENDMENT (TYPE IV)

MATERIALS REQUIREMENTS

NON-CHEMICAL FERTILIZER WITH THE FOLLOWING REQUIREMENTS;
1. Is registered witha Texas State Chemist as a commercial fertilizer
2. Meets USPEA guidelines for unrestricted use.
3. Derived from the following biological source: process bat guano or as approved.
4. Contains a minimum of 8.0% nitroge(4.0% being water insoluble, 6.0% phosphate)
5. Mix into top 6"-8" of backfill mix for each tree, shrub, and groun cover at time of installation, subsequent treatments shall be applied to entire planting area.
6. Use the following product or approved equal
   * Microlife Ultimate 8-4-6 manufactured by San Jacinto Environmental Supplies, 713-957-0909.

ROOT STIMULATOR/FOLIAER SPRAY;
1. Meets USPEA guidelines for unrestricted use.
2. Comprehensive
3. Apply at a rate of 2 ounces per gallon of water for +/- 8 ounces per 1,000 square foot.
4. Apply to root mass of plant material and soak at time of installation, subsequent applications shall be applied as a foliar spray for trees, shrubs, and ground covers.
5. Use the following product or approved equal
   * Ocean Harvest 4-2-3 distributed by San Jacinto Environmental Supplies, 713-957-0909.

EQUIPMENT REQUIREMENTS FOR LIQUID INGREDIENTS

For each batch use a delivery tank verified for overall cleanliness, to be free of residue soil, compost, or stains. Tank shall then be rinsed with clean, non-chlorinated, or non-chloramines treated wll water before filling with required ingredients. All equipment used for application of liquid ingredients must never been used or will not be used with any non-organicconventional inorganic fertilizers or chemical herbicides or pesticides. Contractor must submit written verification to this condition.

Tank shall be equipped with two, 2-inch quick coupler type fittings capable of coupling, without leaks. All lines and fittings should have quick couplers at every junction. Ninety (90) degree bend fittings should be avoid for quick clean-out and verification of cleanliness.
.

TRANSPORT, STORAGE AND APPLICATION REQUIREMENTS

Delivery tank must be equiped with an operating circulation pump of a low velocity, high volume pump or diaphragm or centrifugal design.

Injectors capable of penetrating four (4) inches into soil and/or root-balls as manufactured by LESCO Deeproot Feeder or approved equal.

Delivery tank must be equipped with an operating aeration system.

Dissolved oxygen meter.

Liquid ingredients with additive solution must be circulated for five (5) minutes per five hundred (500) gallons of material every three (3) hours. Liquid additives solution must be continuously aerated from the time of manufacturer through complete application. All solutions must be applied within 24 hours, or new material must be sources. Solutions not applied within 24 hours after mixing shall not be allowed and must be discarded.

STATE OF TEXAS
MICHAEL P. MAUER
1510
REGISTERED
LANDSCAPE ARCHITECT
04/06/2021

CONSTRUCTION METHODS AND APPLICATION RATES

SHRUB, ORNAMENTAL GRASSES, AND GROUND COVER ONLY AT TIME OF INSTALLATION;
1. Contractor shall layout all planting beds and prepare planting beds per the requirements of Planting Bed Preparation, Planting and Establishment Sheet 4 of 7.
2. Prepare root mass of planting material as per Planting and Establishment Sheet 4 of 7.
3. Apply liquid root stimulator to soak entire root balll
4. Install plant material root ball.
5. Incorporate dry, non-chemical fertilizer to backfill mix at the rates specified herein.
6. Apply to root mass of plant material and soak at time of installation, subsequent applications shall be applied as a foliar spray for trees, shrubs, and ground covers.

SUBSEQUENT APPLICATIONS FOR SHRUBS, ORNAMENTAL GRASSES, AND GROUND COVERS ONLY;
1. Install at intervals as outlined on Planting and Establishment Sheets 7 of 7.
2. Apply dry non-chemical fertilizers over entire planting bed limits.
3. Apply prior to installing mulch top dressing if applicable

FILE:

© 2014

Texas Department of Transportation

HOUSTON DISTRICT

PLANTING AND ESTABLISHMENT

SHEET 4 of 7
(P 107)
SOIL AMENDMENTS

Details not to scale

FILE:	FED DIV	STATE	PROJECT NUMBER			SHEET
	X	TEXAS	(See Title Sheet)			111
REVISIONS:	DIST	COUNTY	CONTROL	SECT	JOB	HIGHWAY
	CRP	NUECES	0101	06	095	US-181

PROJECT CONDITIONS DURING INSTALLATION AND SUSPENSION

During project installation and suspension periods, project site conditions are contractor's responsibility. Contractor will maintain project site conditions as shown on plans.
All project site maintenance work is incidental and is not paid for separately unless otherwise shown on plans.
Reference pertinent items of the Texas Standard Specifications for Construction and Maintenance of Highways, Streets and Bridges 2014 for specifications, dimensions, volumes and measurements that are not shown.
Notify engineer prior to each site visit, determination of the completeness of work will be done in the presence of the engineer same day as work activity.

DESCRIPTION OF WORK	TIMELINE	
	BEGINNING OF PROJECT CONSTRUCTION OR SUSPENSION	END OF CONSTRUCTION/INSTALLATION
WATERING (See PLANTING AND ESTABLISHMENT SHEET 1 of 7, VEGETATIVE WATERING SCHEDULE FOR TREES, SHRUBS, VINES) and/or (See PLANTING AND ESTABLISHMENT SHEET 2 of 8 VEGETATIVE WATERING SCHEDULE FOR PALMS ONLY)	FOLLOW SAME REQUIREMENTS AND FREQUENCY SHOWN ON PLANTING AND ESTABLISHMENT SHEET 7 OF 7.	
MOWING, TRIMMING, AND EDGING (From back of curb, retaining wall, barrier, and riprap to bed preparation areas, otherwise 6' width around outside edge of bed preparation areas, around and between planting bed preparation areas, including areas around any structures within the outer limits adjacent to the roadway) DO NOT MOW, TRIM, OR EDGE WITHIN 3' of ANY TREE	FOLLOW SAME REQUIREMENTS AND FREQUENCY SHOWN ON PLANTING AND ESTABLISHMENT SHEET 7 OF 7.	
PLANT BASIN, BED, AND WORKSITE MAINTENANCE (Includes keeping all inlets within or near the bed preparation areas free of compost. Maintain bed preparation areas as shown below and reshape beds every 30 days or as site conditions and weather require. If no requirement is selected, maintain per Item 192.3.15.3) WEED CONTROL REQUIREMENT ✓ See PLANTING AND ESTABLISHMENT SHEET 7 of 7 For Requirements	FOLLOW SAME REQUIREMENTS AND FREQUENCY SHOWN ON PLANTING AND ESTABLISHMENT SHEET 7 OF 7.	
PLANT SUPPORTS See PLANTING AND ESTABLISHMENT SHEET 5 of 8 For Requirements	FOLLOW SAME REQUIREMENTS AND FREQUENCY SHOWN ON PLANTING AND ESTABLISHMENT SHEET 7 OF 7.	
PRUNING (Includes palm plant material and dead, diseased, or damaged palm fronds.)	FOLLOW SAME REQUIREMENTS AND FREQUENCY SHOWN ON PLANTING AND ESTABLISHMENT SHEET 7 OF 7.	
INSECT, DISEASE, AND ANIMAL INSPECTION AND TREATMENT (Exterminate all active ant colonies in bed preparation areas)	FOLLOW SAME REQUIREMENTS AND FREQUENCY SHOWN ON PLANTING AND ESTABLISHMENT SHEET 7 OF 7.	
LITTER AND DEBRIS COLLECTION AND DISPOSAL (Includes planting bed preparation areas and designated mowing limits. In addition, keep all inlets within or near planting bed preparation areas free of debris and litter)	FOLLOW SAME REQUIREMENTS AND FREQUENCY SHOWN ON PLANTING AND ESTABLISHMENT SHEET 7 OF 7.	
TREE TRUNK WRAP AND PROTECTION GUARD REMOVAL AND DISPOSAL (Not applicable)	FOLLOW SAME REQUIREMENTS AND FREQUENCY SHOWN ON PLANTING AND ESTABLISHMENT SHEET 7 OF 7.	
PLANT REPLACEMENT *	FOLLOW SAME REQUIREMENTS AND FREQUENCY SHOWN ON PLANTING AND ESTABLISHMENT SHEET 7 OF 7.	
1009-6003 SOIL AMENDMENT (TYPE III) (PLANTING AND ESTABLISHMENT SHEETS 4 AND 5 of 7 each application will be paid for separately)	FOLLOW SAME REQUIREMENTS AND FREQUENCY SHOWN ON PLANTING AND ESTABLISHMENT SHEET 7 OF 7.	
1009-2004 SOIL AMENDMENT (TYPE IV) (PLANTING AND ESTABLISHMENT SHEETS 4 AND 5 of 7, each application will be paid for separately)	FOLLOW SAME REQUIREMENTS AND FREQUENCY SHOWN ON PLANTING AND ESTABLISHMENT SHEET 7 OF 7.	
FERTILIZER see PLANTING AND ESTABLISHMENT SHEET 4 of 7, FOR TURF AND SOD INSTALLATION)	FOLLOW SAME REQUIREMENTS AND FREQUENCY SHOWN ON PLANTING AND ESTABLISHMENT SHEET 7 OF 7.	
IRRIGATION SYSTEM (Only when Item 170 Irrigation System or a temporary irrigation system is part of the contract, see IRRIGATION DETAILS AND MATERIALS SHEET 1 OF 3, GUARANTEE AND ACCEPTANCE)	FOLLOW SAME REQUIREMENTS AND FREQUENCY SHOWN ON PLANTING AND ESTABLISHMENT SHEET 7 OF 7.	

* Remove any materials damaged by actions described in Item 7.18.1.
Removal and disposal of damaged materials is incidental to Item 192.
Contractor may be reimbursed for plant replacement in accordance with Item 7.18.1.
Theft is not a reimbursable repair.

STATE OF TEXAS
MICHAEL P. MAUER
1510
REGISTERED
LANDSCAPE ARCHITECT

04/06/2021

©2014

Texas Department of Transportation
HOUSTON DISTRICT

PLANTING AND ESTABLISHMENT

SHEET 5 of 7
(P 108)

PROJECT CONDITIONS

FILE:	FED DIV	STATE	PROJECT NUMBER			SHEET
	X	TEXAS	(See Title Sheet)			112
REVISIONS:	DIST	COUNTY	CONTROL	SECT	JOB	HIGHWAY
	CRP	NUECES	0101	06	095	US-181

ITEM 192 LANDSCAPE ESTABLISHMENT REQUIREMENTS

After completion of the project installation, as shown in the plans and approved by the engineer, begin Plant Establishment activities for a period of one (1) year after Substantial Completion as described in Special Provision 192-001.
Payment in accordance with Special Provision 192-001 is subject to completion of all scheduled maintenance activities, timeline may also be suspended for failure to complete scheduled maintenance activities.
All maintenance work is incidental and is not paid for separately unless otherwise shown on plans.
Reference Item 170 and 192 of the Texas Standard Specifications for Construction and Maintenance of Highways, Streets and Bridges 2014 and Special Specification 1006 for specifications, dimensions, volumes and measurements that are not shown.
Notify engineer prior to each site visit, determination of the completeness of work will be done in the presence of the engineer same day as work activity.

| DESCRIPTION OF WORK | TIMELINE (Days) | | |

ITEM 193 LANDSCAPE MAINTENANCE REQUIREMENTS

After completion of the Item 192 maintenance period, as shown in the plans and approved by the engineer, begin Item 193 Maintenance activities and continue annual for the duration of the Agreement with TxDOT.
Reference Item 193 of the Texas Standard Specifications for Construction and Maintenance of Highways, Streets and Bridges 2014 for specifications, dimensions, volumes and measurements that are not shown.
All establishment work is paid for separately in accordance with Item 193 unless otherwise shown on plans.
Notify engineer prior to each site visit, determination of the completeness of work will be done in the presence of the engineer same day as work activity.

TIMELINE (Days) - (1 - 365 = Month 1 thru 12
366 - 726 = Month 13 thru 24)

0(366) 30(396) 60(426) 90(456) 120(486) 150(516) 180(546) 210(576) 240(606) 270(636) 300(666) 330(696) 365

DESCRIPTION OF WORK	1 Thru 7	8 Thru 15	16 Thru 22	23 Thru 30	31 Thru 37	38 Thru 45	46 Thru 52	53 Thru 60	61 Thru 67	68 Thru 75	76 Thru 82	83 Thru 90	91 Thru 97	98 Thru 105	106 Thru 112	113 Thru 120	121 Thru 127	128 Thru 135	136 Thru 142	143 Thru 150	151 Thru 157	158 Thru 165	166 Thru 172	173 Thru 180	181 Thru 187	188 Thru 195	196 Thru 202	203 Thru 210	211 Thru 217	218 Thru 225	226 Thru 232	233 Thru 240	241 Thru 247	248 Thru 255	256 Thru 262	263 Thru 270	271 Thru 277	278 Thru 285	286 Thru 292	293 Thru 300	301 Thru 307	308 Thru 315	316 Thru 322	323 Thru 330	331 Thru 338	339 Thru 346	347 Thru 354	355 Thru 365
193.3.1.1. PRUNING (Includes palm plant material and dead, diseased, or damaged palm fronds.)				✓				✓				✓				✓				✓				✓				✓				✓				✓				✓				✓				✓
193.3.1.2. INSECT, DISEASE, AND ANIMAL CONTROL (Exterminate all active ant colonies in bed preparation areas)		✓		✓		✓		✓		✓		✓		✓		✓		✓		✓		✓		✓		✓		✓		✓		✓		✓		✓		✓		✓		✓		✓		✓		✓
193.3.1.3. FERTILIZATION (Only when Item 192 Palm Material is part of the contract, see PLANTING AND ESTABLISHMENT SHEET 2 of 7, REQUIREMENTS AFTER PLANTING)																✓																✓																✓
193.3.1.4. MULCHING, PLANT BASIN, AND PLANT BED MAINTENANCE (Includes keeping all inlets within or near the bed preparation areas free of compost. Maintain bed preparation areas as shown below and reshape beds every 30 days or as site conditions and weather require. If no requirement is selected below, maintain per Item 193.3.1.4)																																																
WEED CONTROL REQUIREMENT ✓ Maintain weed-free per Item 193.3.1.4. Cord trimmers are not allowed. Replace damaged plants per Item 193.3.2. INVASIVE VINES MUST BE CHEMICALLY TREATED, NOT MANUALLY REMOVED.		✓		✓		✓		✓		✓		✓		✓		✓		✓		✓		✓		✓		✓		✓		✓		✓		✓		✓		✓		✓		✓		✓		✓		✓
✓ Maintain grasses and weeds at 24" maximum height. Eradicate all vines regardless of height, VINES MUST BE CHEMICALLY TREATED, NOT MANUALLY REMOVED. Eradicate invasive shrubs and trees as directed. Method must be either a spot-treatment chemical application such as a wick applicator or manual hand pulling of weeds. Hand-pull previously treated dead plants over 24" tall.																																																
193.3.1.5. MOWING, TRIMMING, AND EDGING (From back of curb, retaining wall, barrier, and riprap to bed preparation areas, otherwise 6' width around outside edge of bed preparation areas, around and between planting bed preparation areas, including areas around any structures within the outer limits adjacent to the roadway) DO NOT MOW, TRIM, OR EDGE WITHIN 3' of ANY TREE	MOW EIGHT TIMES PER 365 DAY PERIOD, ONCE PER MONTH, DURING THE LAST WEEK OF: APRIL, MAY, JUNE, JULY, AUGUST, SEPTEMBER, OCTOBER, NOVEMBER																																																
193.3.1.6. STAKING, GUYING, AND BRACING OF PLANTS (Remove plant stakes and all appurtenances within last 30 days of this schedule, unless otherwise directed by engineer)		✓		✓		✓		✓		✓		✓		✓		✓		✓		✓		✓		✓		✓		✓		✓		✓		✓		✓		✓		✓		✓		✓		✓		✓
193.3.2. PLANT REPLACEMENT *				✓				✓				✓				✓				✓				✓				✓				✓				✓				✓				✓				✓
193.3.3. VEGETATIVE WATERING (See PLANTING AND ESTABLISHMENT SHEET 1 of 7, VEGETATIVE WATERING SCHEDULE FOR TREES, SHRUBS, VINES) and/or (See PLANTING AND ESTABLISHMENT SHEET 2 of 7, VEGETATIVE WATERING SCHEDULE FOR PALMS ONLY)	✓	✓	✓	✓	✓	✓	✓	✓	✓	✓	✓	✓	✓	✓	✓	✓	✓	✓	✓	✓	✓	✓	✓	✓	✓	✓	✓	✓	✓	✓	✓	✓	✓	✓	✓	✓	✓	✓	✓	✓	✓	✓	✓	✓	✓	✓	✓	✓
193.3.4. IRRIGATION SYSTEM OPERATION AND MAINTENANCE		✓		✓		✓		✓		✓		✓		✓		✓		✓		✓		✓		✓		✓		✓		✓		✓		✓		✓		✓		✓		✓		✓		✓		✓
192.3.O.9. MULCHING - PROVIDE 4" LAYER OF HARDWOOD MULCH/GENERAL USE COMPOST MIX, OR EROSION CONTROL COMPOST OVER ENTIRE PLANTING BED LIMITS AT THE TIME OF PLANTING AS SPECIFIED. AFTER THE INITIAL PLANTING 2" MULCH ONLY SHALL BE APPLIED AT THE INTERVALS NOTED. EACH APPLICATION PAID FOR SEPARATELY																					✓																											
1009-2004 SOIL AMENDMENT (TYPE III) (PLANTING AND ESTABLISHMENT SHEETS 4 AND 5 of 7, each application will be paid for separately)	✓																				✓																											
1009-2005 SOIL AMENDMENT (TYPE IV) (PLANTING AND ESTABLISHMENT SHEETS 4 AND 5 of 7, each application will be paid for separately)	✓																				✓																											
FERTILIZER (Only when Item 192 Palm Material is part of the contract, see PLANTING AND ESTABLISHMENT SHEET 2 of 8, REQUIREMENTS AFTER PLANTING)	✓																				✓																											
IRRIGATION SYSTEM (Only when Item 170 Irrigation System or a temporary irrigation system is part of the contract, see IRRIGATION DETAILS AND MATERIALS SHEET 1 OF 3, GUARANTEE AND ACCEPTANCE)	✓	✓	✓	✓		✓		✓		✓		✓		✓		✓		✓		✓		✓		✓		✓		✓		✓		✓		✓		✓		✓		✓		✓		✓		✓		✓

* Remove any materials damaged by actions described in Item 7.18.1.
Removal and disposal of damaged materials is incidental to Item 193.

✓ = Work required during defined period of timeline.
All work must be completed for entire project.

NOTES:

1. Reference Item 5.10 Inspection of the Texas Standard Specifications for Construction and Maintenance of Highways, Streets, and Bridges 2014. At any time during all phases of the contract, any materials or work performed not in accordance with the plans and specifications will be replaced and/or reworked until in compliance.
2. Any adjustments due to the failure to comply with plans andspecifications shown will be at contractors expense.

STATE OF TEXAS
MICHAEL P. MAUER
1510
REGISTERED
LANDSCAPE ARCHITECT
04/06/2021

© 2014

Texas Department of Transportation
HOUSTON DISTRICT

PLANTING AND ESTABLISHMENT

SHEET 7 of 7
(P 110)

ESTABLISHMENT

FILE:	FED DIV	STATE	PROJECT NUMBER			SHEET
	X	TEXAS	(See Title Sheet)			114
REVISIONS:	DIST	COUNTY	CONTROL	SECT	JOB	HIGHWAY
	CRP	NUECES	0101	06	095	US-181

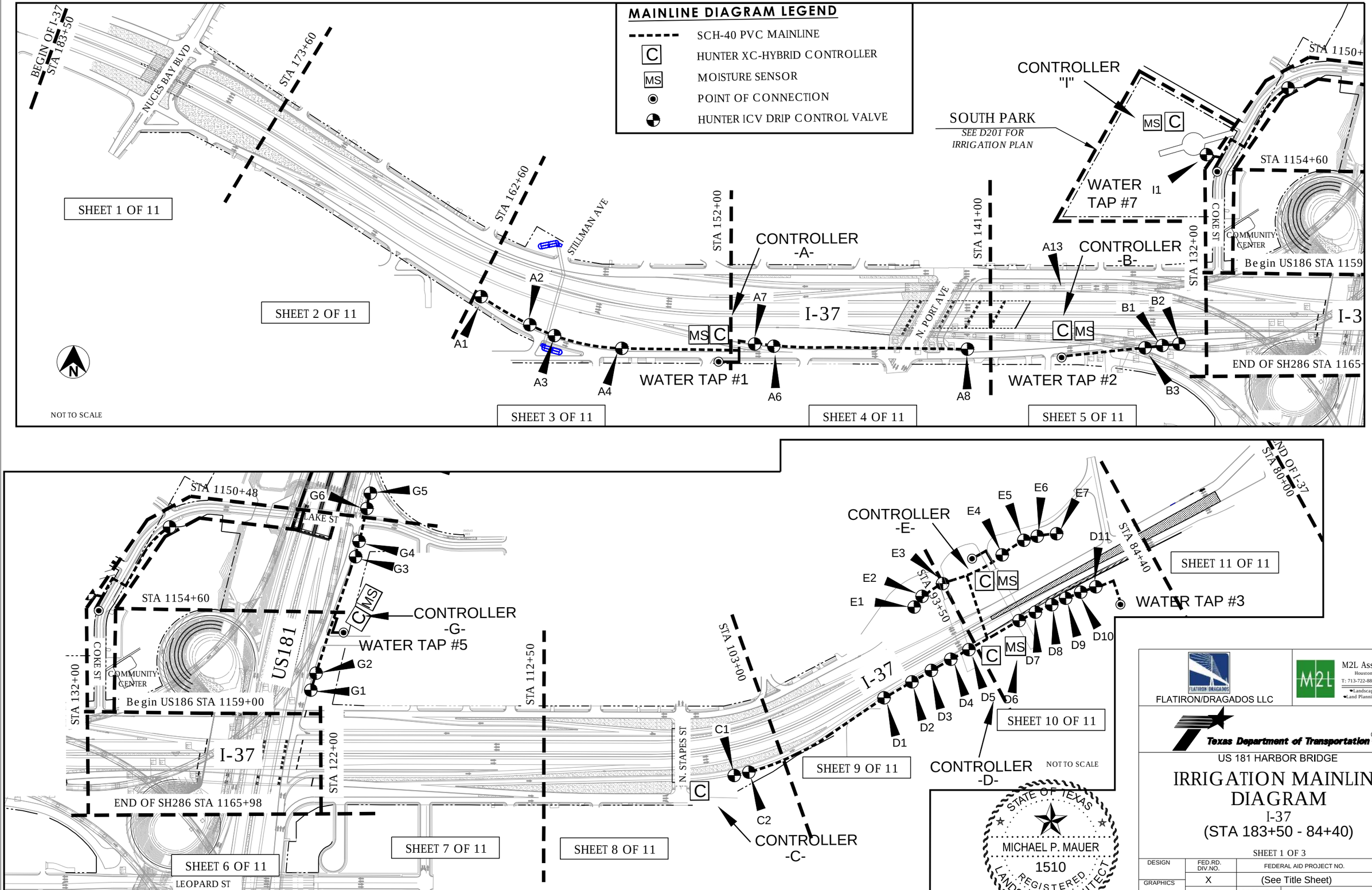

FLATIRON/DRAGADOS LLC

M2L Associates Inc.
Houston, Texas 77024
T: 713-722-8897 F: 713-722-8048
Landscape Architecture • Land Planning • Urban Design

Texas Department of Transportation ® 2016

US 181 HARBOR BRIDGE

IRRIGATION MAINLINE DIAGRAM

I-37
(STA 183+50 - 84+40)

SHEET 1 OF 3

DESIGN	FED.RD. DIV.NO.	FEDERAL AID PROJECT NO.		HIGHWAY NO.
GRAPHICS	X	(See Title Sheet)		
	STATE	DISTRICT	COUNTY	SHEET NO.
CHECK	TEXAS	CRP	NUECES	IM101
CHECK	CONTROL	SECTION	JOB	115
	0101	06	095	

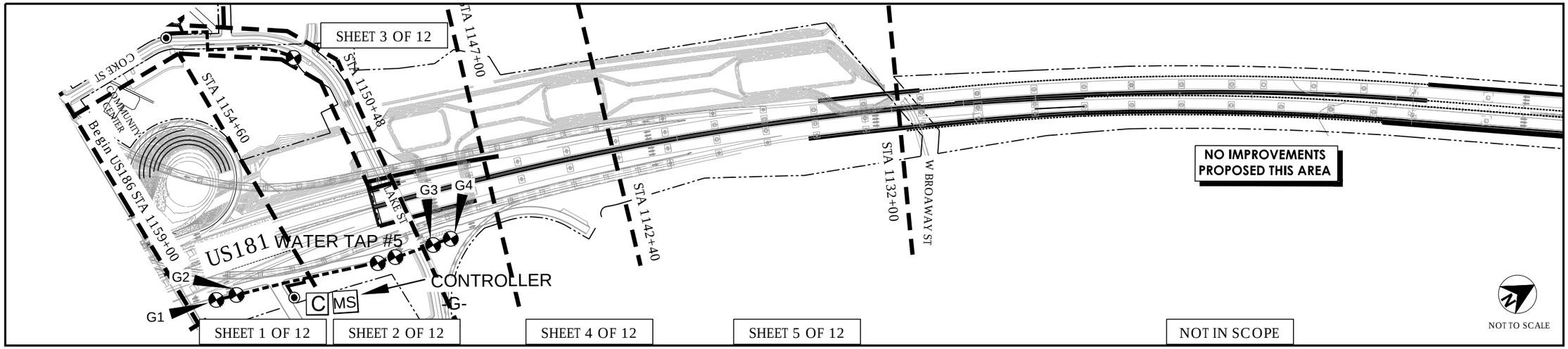

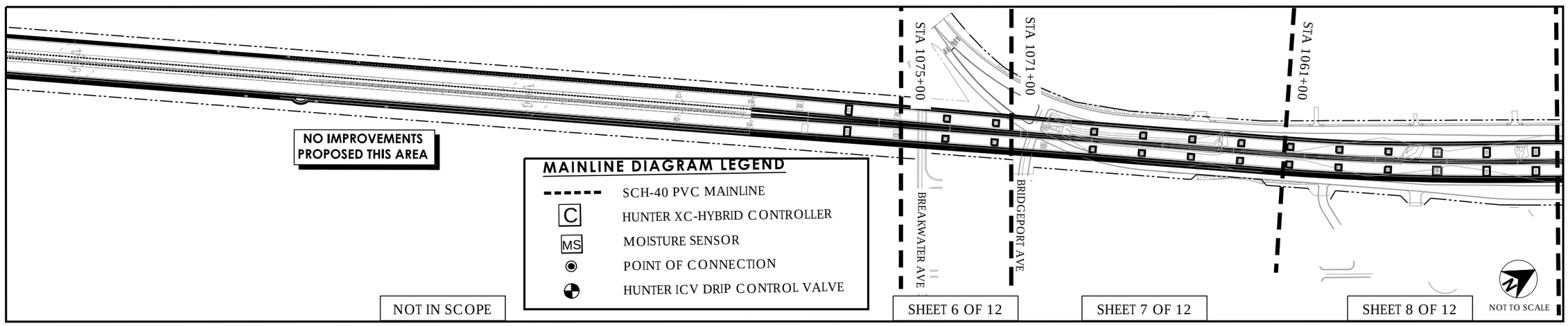

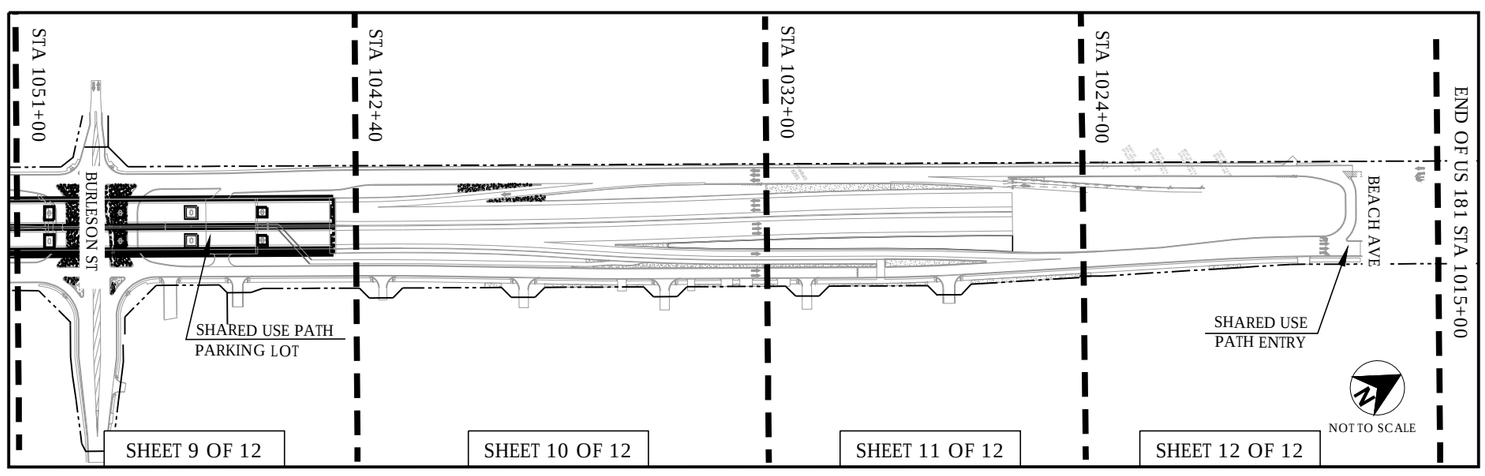

STATE OF TEXAS
MICHAEL P. MAUER
1510
REGISTERED
LANDSCAPE ARCHITECT
April 6, 2021

FLATIRON/DRAGADOS LLC

M2L Associates Inc.
Houston, Texas 77024
T: 713-722-8897 F: 713-722-8048
Landscape Architecture
Land Planning Urban Design

Texas Department of Transportation © 2016

US 181 HARBOR BRIDGE

IRRIGATION MAINLINE DIAGRAM

US 181 (PKG. 'B')
(STA 1159+50 -1015+00)

SHEET 2 OF 3

DESIGN	FED.RD. DIV.NO.	FEDERAL AID PROJECT NO.		HIGHWAY NO.
GRAPHICS	X	(See Title Sheet)		
	STATE	DISTRICT	COUNTY	SHEET NO.
CHECK	TEXAS	CRP	NUECES	IM102
	CONTROL	SECTION	JOB	116
CHECK	0101	06	095	

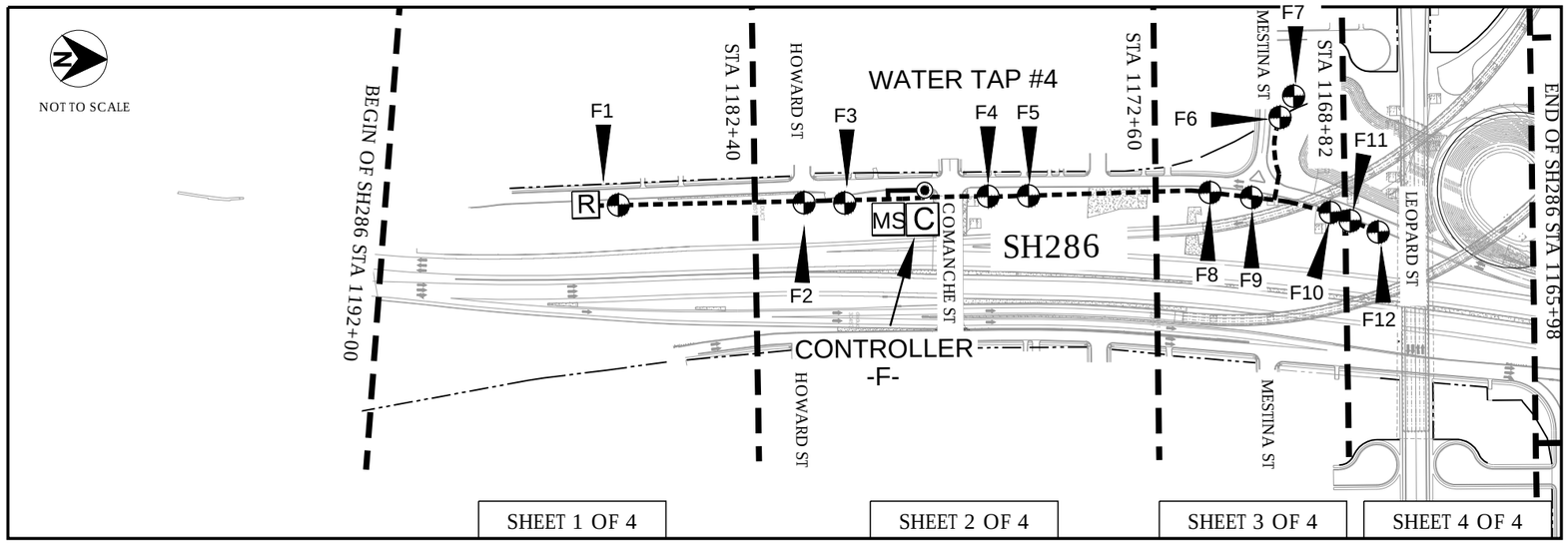

MAINLINE DIAGRAM LEGEND

- - - - - -	SCH-40 PVC MAINLINE
C	HUNTER XC-HYBRID CONTROLLER
MS	MOISTURE SENSOR
◉	POINT OF CONNECTION
◐	HUNTER ICV DRIP CONTROL VALVE

STATE OF TEXAS
MICHAEL P. MAUER
1510
REGISTERED
LANDSCAPE ARCHITECT
April 6, 2021

FLATIRON/DRAGADOS LLC

M2L Associates Inc.
Houston, Texas 77024
T: 713-722-8897 F: 713-722-8048
Landscape Architecture
Land Planning Urban Design

Texas Department of Transportation 2016

US 181 HARBOR BRIDGE

IRRIGATION MAINLINE DIAGRAM

SH 286 (PKG 'C')
(STA 1192+00 -1163+40)

SHEET 3 OF 3

DESIGN	FED.RD. DIV.NO.	FEDERAL AID PROJECT NO.		HIGHWAY NO.
GRAPHICS	X	(See Title Sheet)		
	STATE	DISTRICT	COUNTY	SHEET NO.
CHECK	TEXAS	CRP	NUECES	IM103
CHECK	CONTROL	SECTION	JOB	117
	0101	06	095	

TYPE OF WORK				REQUIREMENTS
170-6002 IRRIGATION SYSTEM (TY I) LS	170-6003 IRRIGATION SYSTEM (TY II) LS	170-6004 IRRIGATION SYSTEM (TY III) LS	170-6005 IRRIGATION SYSTEM (TY IV) LS	FOR ALL IRRIGATION SYSTEM TYPES, THE DESIGN, FURNISH, INSTALLATION, REMOVAL, AND MAINTENANCE OF IRRIGATION SYSTEMS IS INCIDENTAL TO ITEM 170 AND WILL NOT BE PAID FOR SEPARATELY UNLESS OTHERWISE SHOWN.
✓				Furnish and install irrigation system in accordance with Item 170 of the Standard Specifications for Construction and Maintenance of Highways, Streets, and Bridges 2014, plans, details, and notes.
	✓			Design, furnish, and install irrigation system in accordance with Item 170 of the Standard Specifications for Construction and Maintenance of Highways, Streets, and Bridges 2014, plans, details, and notes. Design is incidental to this item and not paid for separately.
		✓		Design, furnish, install, and remove irrigation system in accordance with Item 170 of the Standard Specifications for Construction and Maintenance of Highways, Streets, and Bridges 2014, and notes. Power supply must not involve the purchase of electricity. Water distribution must utilize a drip system. Design and removal are incidental to this item and not paid for separately.
✓	✓	✓		Provide shop drawings with layout, details, and specifications for approval prior to work.
		✓		Remove all above ground components at end of contract.
✓	✓	✓		Provide as-built drawings at completion of irrigation system. As-built drawings must be sealed by Licensed Irrigator. See additional notes this sheet for requirements.

IRRIGATION SYSTEM NOTES

GENERAL

1. Reference Item 170 of the Texas Standard Specifications for Construction and Maintenance of Highways, Streets and Bridges 2014 for specifications, dimensions, volumes and measurements not shown.
2. Locate and stake all underground conduits and utilities associated with but not limited to: CTMS, CTMS power supply, lighting, signal wires and detectors, gas, electrical, telephone, fiber optics, etc.
3. Locate and stake existing ground boxes, inlets, culverts, manholes, etc. within the project area with a 4' wooden stake painted orange. Maintain the stakes in place for duration of contract. Remove stakes as directed by engineer.
4. The drawings are diagramatic of the work to be performed. Changes may be required due to varying conditions or as directed by the engineer.
5. Conduct a complete inventory and analysis of site conditions, incidental construction such as boring, mainline adjustment, sidewalk removal and replacement, utility adjustments, etc. will not be paid for separately unless shown on plans.
6. See IRRIGATION DETAILS AND MATERIALS SHEET 3 of 3 for materials specifications, sizes, and requirements.
7. Reference Item 5.10 Inspection of the Texas Standard Specifications for Construction and Maintenance of Highways, Streets, and Bridges 2014. At any time during all phases of the contract, any materials or work performed not in accordance with the plans and specifications will be replaced and/or reworked until in compliance.
8. Any adjustments due to the failure to comply with plans and specifications shown will be at contractors expense.

CONSTRUCTION METHODS

1. Locate and stake irrigation system and related work in the field. Locate all irrigation valves, mainlines, dripline, etc., for approval by the engineer prior to installation. Any adjustments to work performed prior to approval will be incidental.
2. Obtain all permits, licenses, tests, and approvals. Pay any fees and deposits and install or arrange for all water meters and taps for installation and operation as applicable. Deposits will not be refunded by TxDOT.
3. Install water meter(s). WATER METERS WILL BE PLACED IN NAME OF THE CONTRACTOR THROUGHOUT ENTIRE CONTRACT. The contractor will pay for monthly water charges. Ensure water meter(s) remain operational and turned on for duration of the contract. Upon completion of the contract transfer water meter(s) into name of entity provided by the engineer.
4. Install backflow preventer(s). BACKFLOW PREVENTERS WILL BE PLACED IN NAME OF THE CONTRACTOR THROUGHOUT ENTIRE CONTRACT. Pay all charges, fees, tests, and coordination for any backflow preventer(s) testing at installation or annual inspection required by local entity for duration of the contract. Upon completion of the contract transfer backflow preventer(s) into name of entity provided by the engineer.
5. Excavation and Trenching Item 170.3.2. Exercise care when excavating near trees. No mechanical trenching is permitted below the canopy of existing trees. Adjust trench path, bore, and/or excavate by hand to avoid damage to existing tree root system. Keep trench bottom clean and smooth with all organic debris and sharp objects removed.
6. Boring Item 170.3.3. Stake boring and sleeve locations for engineer's approval. Bore pit will be minimum of 5 feet from edge of base material or pavement unless otherwise approved by engineer. The size of the bore will not exceed the diameter of the encasement by more than 1 inch. Cover or fill bore pit during non-scheduled work hours.
7. Encasement 170.3.5 Depth is minimum 36 inches below roadway pavement surface. All encasement is continuous and will extend the full width of the pavement and 5' on each side thereof. Encasement is incidental to irrigation system. Install encasement same day as boring.
8. Pipe and Valve Assembly 170.3.6. Do not install pipe when air temperature is below 40 degrees fahrenheit. Cut pipe in a manner that will ensure a square cut. Remove burs prior to installation for a clean, smooth unobstructed flow. Install pipe to an even grade and support pipe continuously on bottom of trench. Snake pipe in trench to allow for contraction and expansion.
9. Sprinkler Heads and Drip Tubing 170.3.7. See note 10 before installing dripline.
10. Closing and Flushing of PVC Pipe 170.3.10. Thoroughly flush all water lines before installing dripline.
11. Hydrostatic Tests 170.3.11. Engineer must be present.
12. Backfill and Compaction 170.3.12. Backfill to correct soil settlement is incidental.

GUARANTEE AND ACCEPTANCE

1. Maintenance period. Inspect irrigation system concurrently with, and subject to the same maintenance requirement period under Items 192 and 193. During the installation and maintenance period perform the following activities as a minimum and to the satisfaction of the engineer:
   A)Install and maintain the controller program to ensure the proper distribution of water (includes replacement of any batteries).
   B)Inspect, repair, and/or replace any equipment that is found defective, damaged or stolen.
   C)Make any adjustments that may become necessary to ensure the proper delivery of water to the plant material.
2. As-built drawings. Furnish the engineer a set of as-built drawings on reproducible 11x17 sheets upon completion of the installation of the irrigation system. The as-built drawings will be verified that they are a true record of the project conditions. Show all valve locations on drawings by triangulation from a fixed object. Show actual location of main and lateral lines from a fixed object. As-built drawings must be sealed by Licensed Irrigator.
3. Operating and maintenance data. Provide instructions covering full operation, care and maintenance of the equipment, including a schedule showing time each valve is open to provide determined amount of water, and instruct personnel designated by engineer in proper operation of the system.

STATE OF TEXAS
MICHAEL P. MAUER
1510
REGISTERED
LANDSCAPE ARCHITECT
04/06/2021

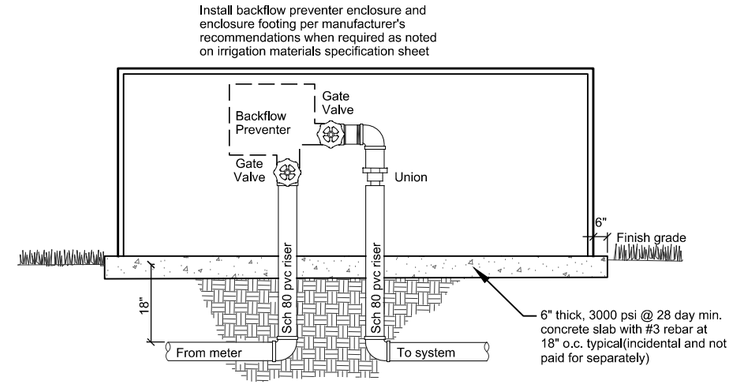

BACKFLOW PREVENTER ABOVE GROUND INSTALLATION

Type shall meet local code. Local code will have precedence over this detail.

OR

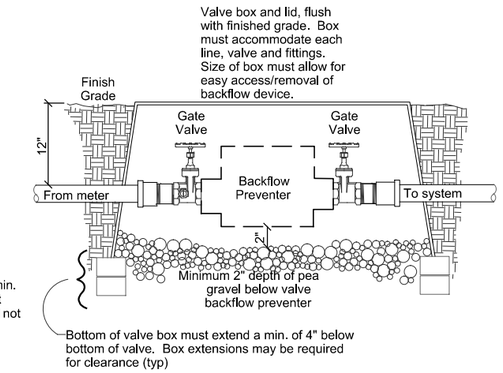

BACKFLOW PREVENTER IN GROUND INSTALLATION

Type shall meet local code. Local code will have precedence over this detail.

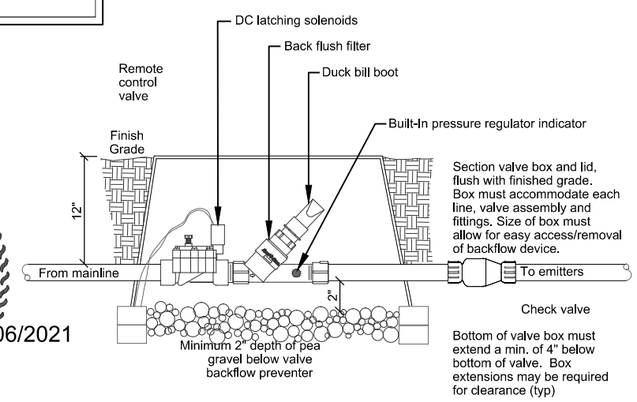

SECTION - PIPING TO/FROM REMOTE CONTROL VALVE ASSEMBLY

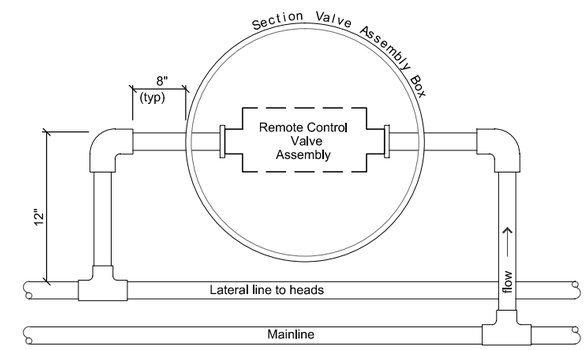

PLAN - PIPING TO/FROM REMOTE CONTROL VALVE ASSEMBLY

REMOTE CONTROL VALVE ASSEMBLY

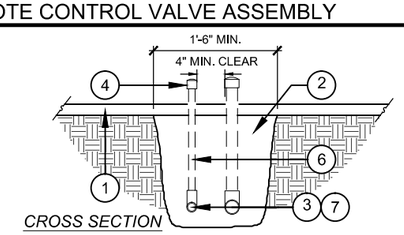

CROSS SECTION

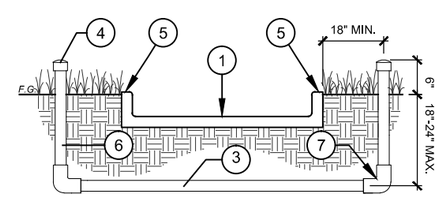

LONGITUDINAL SECTION

IRRIGATION BORE AND SLEEVE DETAIL

DETAIL NOTES:

1. PAVING
2. TRENCH
3. SLEEVES- SIZE PER PLANS
4. PVC CAP (6" MIN. ABOVE GRADE)
5. PROVIDE PERMANENT PAVEMENT MARKERS (SURVEY MARKER) FOR SLEEVE LOCATIONS ON CURB OR ADJACENT PAVEMENT SURFACES.
6. PVC RISER PIPE
7. PVC ELBOW

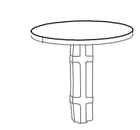

SURVEY MARKERS
FLAT 1-1/2"
WWW.CAPITALSURVEYINGSUPPLIES.COM

© 2014

Texas Department of Transportation
HOUSTON DISTRICT

IRRIGATION DETAILS AND MATERIALS (MOD)

SHEET 1 OF 3
(I 101)

Details not to scale

FILE:	FED DIV	STATE	PROJECT NUMBER			SHEET
	X	TEXAS	(See Title Sheet)			118
REVISED: FEB 2015 for 2014 specs.	DIST	COUNTY	CONTROL	SECT	JOB	HIGHWAY
	CRP	NUECES	0101	06	095	

STD K-5

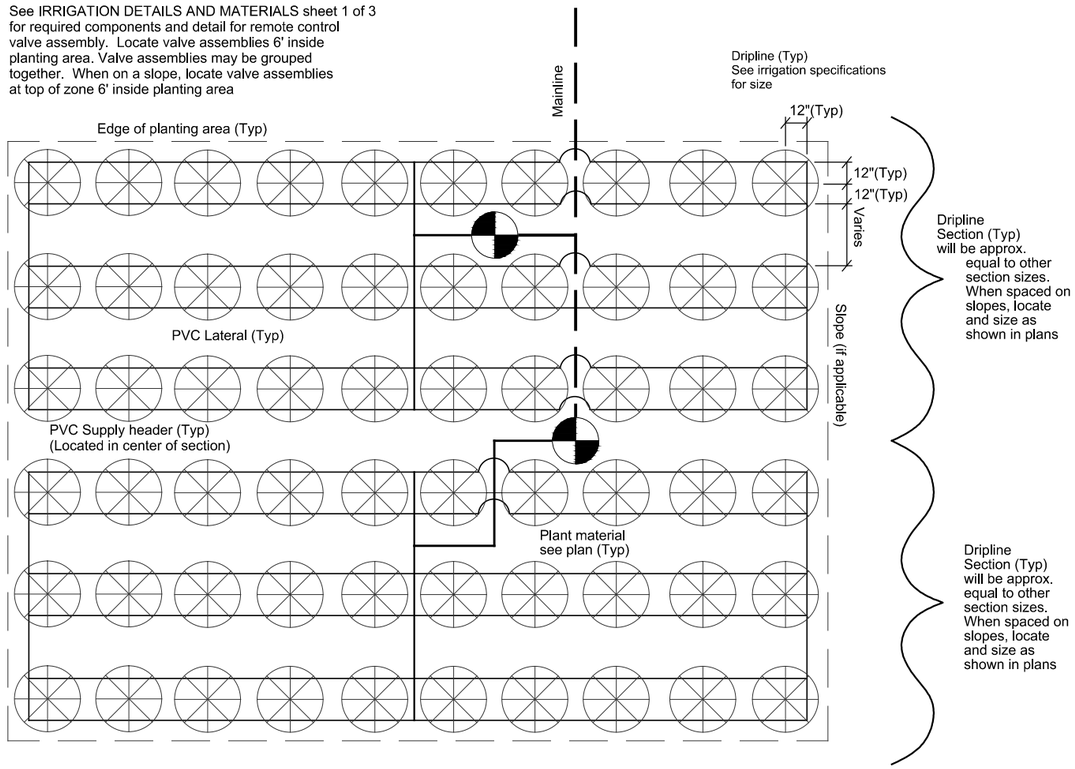

DRIPLINE INSTALLATION - GROUP PLANTING

Note: When dripline sections are installed on slopes, schedule controller such that lower sections on slope are operating for shorter lengths of time. Contact engineer and landscape architect for setting length of timed dripline section operation. Total number of emitters and laterals will not allow for section GPM (gallons per minute) to exceed 20 GPM

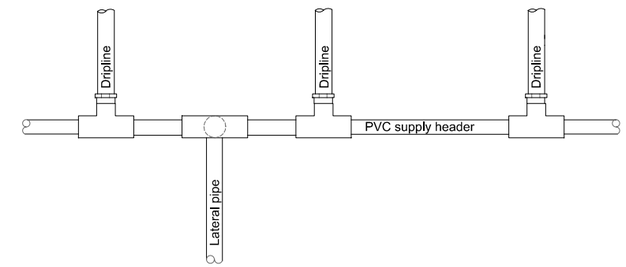

PLAN - RISER/SUPPLY HEADER TO DRIP TUBING

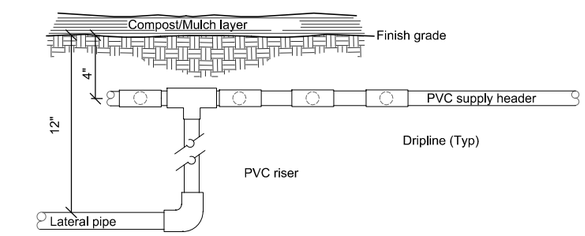

SECTION - RISER/SUPPLY HEADER TO DRIP TUBING

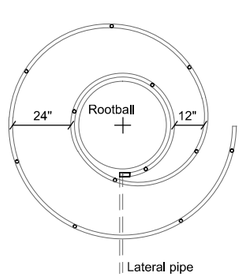

Install dripline as one piece spiralled around rootball with dimensions shown. Inner ring of drip tubing at edge of rootball may be wrapped around rootball

End cap (Typ)

Dripline length will be long enough to have minimum 12 emitters

PLAN - RISER TO DRIPLINE IN TREE PIT

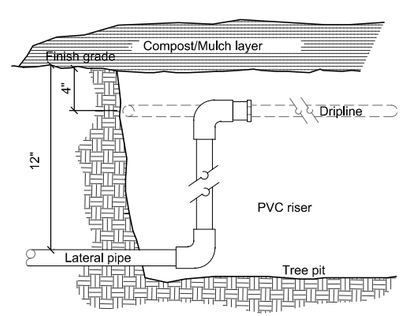

SECTION - RISER TO DRIPLINE IN TREE PIT

DRIPLINE INSTALLATION - INDIVIDUAL PLANTING

Note: Total number of emitters and laterals will not allow for section GPM (gallons per minute) to exceed 20 GPM

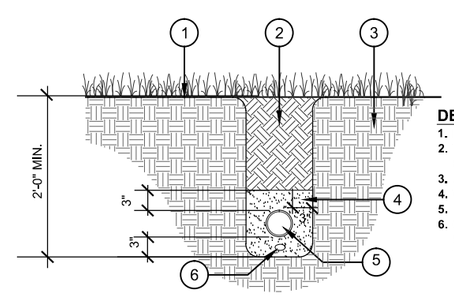

DETAIL NOTES:

1. FINISH GRADE
2. TRENCH (BACKFILLED WITH COMPACTED NATIVE SOIL)
3. UNDISTURBED SOIL
4. WASHED BANK SAND
5. IRRIGATION MAINLINE
6. CONTROL WIRE(S) WITH 2" MINIMUM SEPERATION FROM MAINLINE AND TRENCH EDGES. (LOCATE BELOW MAINLINE FOR PROTECTION)

IRRIGATION MAINLINE INSTALLATION DETAIL

04/06/2021

© 2014

Texas Department of Transportation

HOUSTON DISTRICT

IRRIGATION DETAILS AND MATERIALS (MOD)

SHEET 2 OF 3

(I 102)

Details not to scale

FILE:	FED DIV	STATE	PROJECT NUMBER			SHEET
	X	TEXAS	(See Title Sheet)			119
REVISED: FEB 2015 for 2014 specs.	DIST	COUNTY	CONTROL	SECT	JOB	HIGHWAY
	CRP	NUECES	0101	06	095	

IRRIGATION MATERIALS SPECIFICATIONS

DESCRIPTION	* EXAMPLE OR EQUAL	SIZE	REMARKS
TAP/METER	LOCAL CODE	1-1/2 inch minimum	LOCAL CODE MAY REQUIRE LARGER METER CONTRACTOR TO BE RESPONSIBLE FOR LOCATING EXISTING WATER SERVICE LINES AND ALL COSTS ASSOCIATED WITH TAPS, METERS AND IMPACT FEES AS PART OF THE IRRIGATION SCOPE OF WORK
BACKFLOW PREVENTER	APPROVED BY LOCAL CODE	2 inch minimum	MOST LOCATIONS WILL REQUIRE RPZ DUE TO ELEVATION CHANGES
BACKFLOW PREVENTER ENCLOSURE REQUIRED FOR THE FOLLOWING IRRIGATION SYSTEM TYPES: TYPE I TYPE II Enclosure will be approved by the Engineer. Enclosure will be manufactured specifically for purpose of protecting backflow preventor. Enclosure will be vandal-resistant, lockable with the ability to be anchored to the ground. Enclosure will be completely anchored to the ground. Enclosure will be completely removable. Enclosure size will provide access and clearance on all sides of backflow preventer. Locking clearnace on all sides of backflow preventer. Locking mechanism will be approved by the Engineer. Provide locks and keys. All locks will use same keys unless otherwise directed by the Engineer. Keys will match master key provided by Engineer or Landscape Architect. Locks may be integrated into enclosure.	APPROVED BY ENGINEER	APPROVED BY ENGINEER	PROVIDE FOUR(4) KEYS TO ENGINEER IF ENCLOSURE IS REQUIRED
VALVE APPURTENANCES: INCLUDES: BACK FLUSH FILTER and PRESSURE REGULATOR CHECK VALVE DUCK BILL BOOT CLOSE NIPPLES (1")	HUNTER ICZ DRIP CONTROL ZONE KITS	ICZ 1" OR ICZ 1.5" XL 1 inch TO 1-1/2 inch (SEE PLANS FOR SPECIFIC SIZE)	MAXIMUM OF 1,000 FT FROM CONTROLLER
IRRIGATION CONTROLLER	HUNTER XC HYBRID 12 STATION CONTROLLER PROVIDE OUTDOOR RATED STAINLESS STEEL	MODEL NO. SCH-1200-SS	UTILIZE 2"Ø GALVANIZED POST IMBEDDED IN GROUND 3' DEEP IN 12"Ø CONCRETE FOOTING. HEIGHT ABOVE GROUND TO MATCH REQUIRED ANTENNA HEIGHT (±30') PROVIDE ALL MISC. HARDWARE REQUIRED FOR MOUNTING. HUNTER SCHSPB MOUNTING BRACKET OR APPROVED EQUAL. MOUNT CONTROLLER 3FT ABOVE FG.
RAIN MOISTURE SENSOR	HUNTER RAIN-CLIK MOISTURE SENSOR	MODEL WR-CLIK WIRELESS RAIN-CLIK SENSOR AND RECEIVER	MOUNT TO BACK OF STAINLESS STEEL CONTROLLER ENCLOSURE OR PROVIDE SEPARATE CONCRETE EMBEDED POLE MOUNTED CONFIGURATION
SLEEVE AND BORING		4 inch OR 6 inch (SEE PLANS FOR SPECIFIC SIZE)	OVERCUTTING WILL NOT BE ALLOWED
PVC SCH 40 ENCASEMENT PIPE FOR SLEEVES AND BORES Pressure rated with slip type solvent welded joints		4 inch OR 6 inch (SEE PLANS FOR SPECIFIC SIZE)	REFERENCE ITEM 170.2.3
PVC SCH 80 above ground at backflow device		2 inch	PIPE RATED FOR DIRECT SUNLIGHT EXPOSURE
PVC SCH 40 MAINLINE Pressure rated with twin gasket couplings and fittings or slip type solvent welded joints		2 inch	
PVC SCH 40 LATERALS AND HEADERS		1 inch TO 1-1/2" (SEE PLANS FOR SPECIFIC SIZE)	
PVC SCH 80 ABOVE GROUND PIPE			PIPE RATED FOR DIRECT SUNLIGHT EXPOSURE
BURIED RISERS AND SWING-JOINT COMPONENTS SCH 80			
PVC FITTINGS All fittings incorporated into system will be of the same type, size and class material as the pipe			
Dripline with COPPER SHIELD for Sub-Surface Irrigation	RAINBIRD DRIPLINE XFS-06-18	0.6 GAL./HR, 18 inch DRIPPER SPACING	INSTALL 3 inches BELOW SOIL SURFACE
DRIPLINE FITTINGS Use fittings specifically manufactured for all dripline connections, no bending/crimping allowed.			
CONTROL WIRE All low voltage control wire will be color coded. Wire sizes will conform to the controller manufacturer specifications for maximum distances for specific wire sizes. All wire will be specifically manufactured for direct burial. All wire connections and splices for direct All wire connections and splices will be made in ground boxes. The splice will be completely waterproof and will be completely encapsulated within a King Safety Sealed Irrigation Connector/Splice enclosure or an approved equal			
SOLVENT CEMENT Solvent cement will be the type recommended by the			
VALVE BOXES Boxes for section valves, below-ground backflow preventers, and quick coupling valves will be as shown on detail sheet			
VALVE BOX RISERS			

IRRIGATION SYSTEM NOTES:
1. Reference IRRIGATION DETAILS AND MATERIALS sheets 1,2 and 3 for details and requirements.
2. Reference to manufacturer's trade name or catalog number is for the purpose of identification only, Contractor is permitted to furnish like materials of other manufacturers provided they are of equal quality and comply with specifications for this project.

STATE OF TEXAS
MICHAEL P. MAUER
1510
REGISTERED
LANDSCAPE ARCHITECT
04/06/2021

© 2014

Texas Department of Transportation
HOUSTON DISTRICT

IRRIGATION DETAILS
AND MATERIALS (MOD)

SHEET 3 OF 3
(I 103)

FILE:	FED DIV	STATE	PROJECT NUMBER			SHEET
	X	TEXAS	(See Title Sheet)			120
REVISED: FEB 2015 for 2014 specs.	DIST	COUNTY	CONTROL	SECT	JOB	HIGHWAY
	CRP	NUECES	0101	06	095	

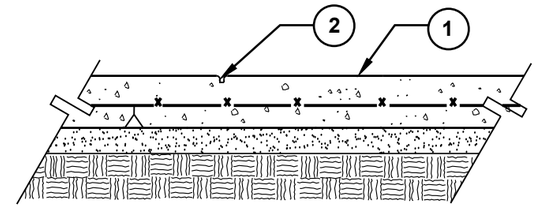

DETAIL NOTES:

1. CONCRETE PAVEMENT, **SEE PLANS FOR FINISH AND TEXTURE, SEE DETAIL #1, THIS SHEET** FOR TYPICAL CONCRETE DETAIL.
2. ± 1/8" W(MAX.) X 1" DEEP SAWCUT JOINT @ 5'-0" O.C. OR AS SPECIFIED ON THE DRAWINGS

3 CONCRETE CONTROL JOINT — SCALE 1"=1'-0"

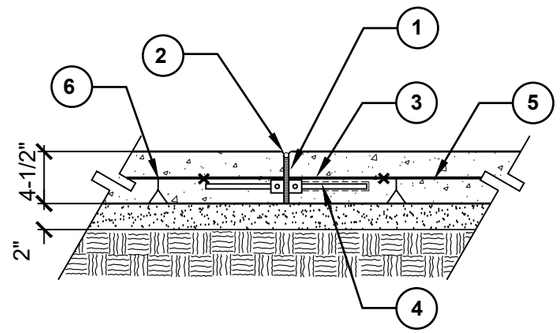

DETAIL NOTES:

1. 1/2" PREFORMED BITUMINOUS EXPANSION BOARD WITH FILLER AND SEALANT AS SPECIFIED ON THE DRAWINGS, SEALANT COLOR TO MATCH ADJACENT PAVEMENT.
2. 1/4" R HAND TOOLED EDGE - TYPICAL
3. CONCRETE PAVEMENT SECTION, **SEE DETAIL #1, THIS SHEET.**
4. #4 X12" LONG, SMOOTH REBAR @ MAX 24"O.C. OR AS NOTED ON DRAWINGS. WHERE EXISTING PAVEMENT IS PRESENT, DRILL INTO PAVEMENT AND SET DOWELS
5. REINFORCING
6. REBAR CHAIR AT 1/2 PAVEMENT THICKNESS IN HEIGHT.

2 EXPANSION JOINT W/SEALANT — SCALE 1"=1'-0"

6 NOT USED

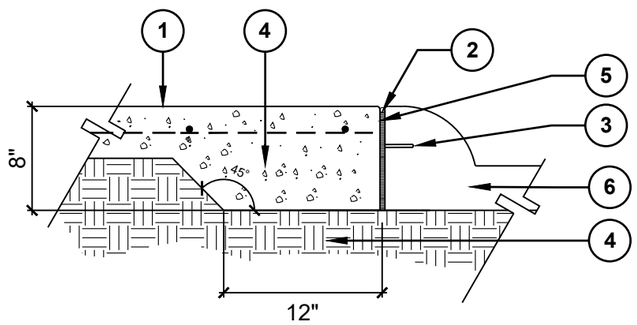

DETAIL NOTES:

1. CONCRETE PAVING, **SEE LAYOUT PLANS.**
2. COLORED SEALANT TO MATCH SURROUNDING PAVEMENT COLOR.
3. GALV. STEEL NAIL 8 D COMMON @ 12" O.C.
4. CONCRETE PAVEMENT TURNDOWN
5. 1/2" BITUMINOUS EXPANSION BOARD WITH FILLER AND SEALANT.
6. EXISTING ROADWAY CURB.

5 EXPANSION JOINT AT CURBING — SCALE 1"=1'-0"

4 NOT USED

1 NOT USED

STATE OF TEXAS
MICHAEL P. MAUER
1510
REGISTERED
LANDSCAPE ARCHITECT
March 13, 2023

FLATIRON/DRAGADOS LLC

M2L Associates Inc.
Houston, Texas 77024
T: 713-722-8897 F: 713-722-8048
Landscape Architecture
Land Planning Urban Design

Texas Department of Transportation ©2016

US 181 HARBOR BRIDGE

CONSTRUCTION DETAILS

Sidewalk Details

SHEET 1 OF 9

DESIGN	FED.RD. DIV.NO.	FEDERAL AID PROJECT NO.		HIGHWAY NO.
GRAPHICS	X	(See Title Sheet)		
	STATE	DISTRICT	COUNTY	SHEET NO.
CHECK	TEXAS	CRP	NUECES	LD101
CHECK	CONTROL	SECTION	JOB	
	0101	06	095	121

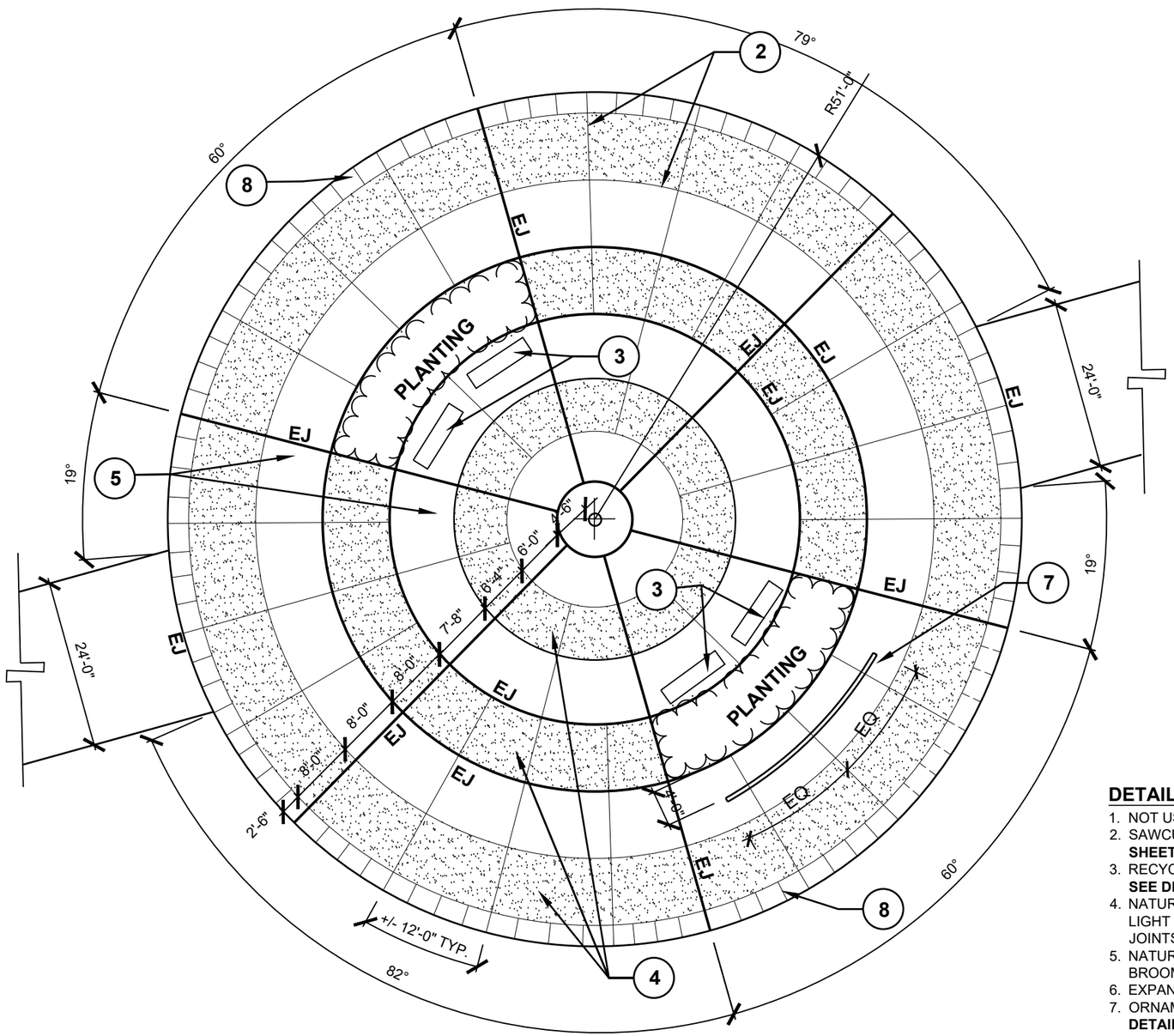

DETAIL NOTES:

1. NOT USED
2. SAWCUT CONTROL JOINT - TYP, **SEE DETAIL #5, SHEET 1 OF 10**.
3. RECYCLED PLASTIC AND CONCRETE BENCHES, **SEE DETAIL #3, LD109**
4. NATURAL COLORED CONCRETE PAVING WITH LIGHT SANDBLAS FINISH TEXTURE AND SAWCUT JOINTS, INCIDENTAL TO 0528
5. NATURAL COLORED CONCRETE PAVING WITH BROOM FINISH AND SAWCUT JOINTS
6. EXPANSION JOINT, **SEE DETAIL #2, SHEET LD101**
7. ORNAMENTAL BIKE RACK, **SEE CONSTRUCTION DETAILS SHEET 6 OF 10**
8. 2'-6" WIDE,NATURAL COLORED CONCRETE PAVING WITH BROOM FINISH AND SAWCUT JOINTS AT 2'-0" O.C.

2 SOUTH PARK CIVIC PLAZA OVERALL LAYOUT — SCALE 1/16"=1'-0"

DETAIL NOTES:

1. RELOCATED, GALVANIZED TRELLIS WITH NEW CONCRETE PIER & FOOTING, **SEE CONSTRUCTION DETAILS LD107, 208, AND SHEETS 7 & 8 OF10**.
2. STANDARD CONCRETE COLOR WITH LIGHT BROOM FINISH.
3. EXPANSION JOINT WITH SEALANT, **SEE CONSTRUCTION DETAIL#2, LD101, SHEET 1 O F 10**.
4 CONTROL JOINT, **SEE CONSTRUCTION DETAIL#3, LD101, SHEET 1 OF 10**.

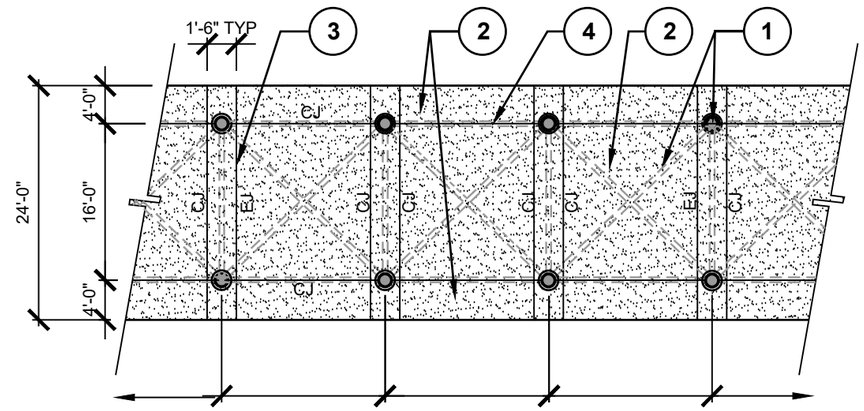

MATCH COLUMN SPACING WOTH CJ/EJ'S

1 SPECIAL CON. SIDEWALK AT SOUTH PARK CIVIC PLAZA TRELLIS — SCALE 1/16"=1'-0"

STATE OF TEXAS
MICHAEL P. MAUER
1510
REGISTERED
LANDSCAPE ARCHITECT
March 13, 2023

FLATIRON/DRAGADOS LLC

M2L Associates Inc.
Houston, Texas 77024
T: 713-722-8897 F: 713-722-8048
•Landscape Architecture•
•Land Planning• Urban Design•

Texas Department of Transportation ® 2016

US 181 HARBOR BRIDGE

CONSTRUCTION DETAILS

South Park Plaza

SHEET 2 OF 9

DESIGN	FED.RD. DIV.NO.	FEDERAL AID PROJECT NO.		HIGHWAY NO.
GRAPHICS	X	(See Title Sheet)		
	STATE	DISTRICT	COUNTY	SHEET NO.
CHECK	TEXAS	CRP	NUECES	LD102
CHECK	CONTROL	SECTION	JOB	
	0101	06	095	

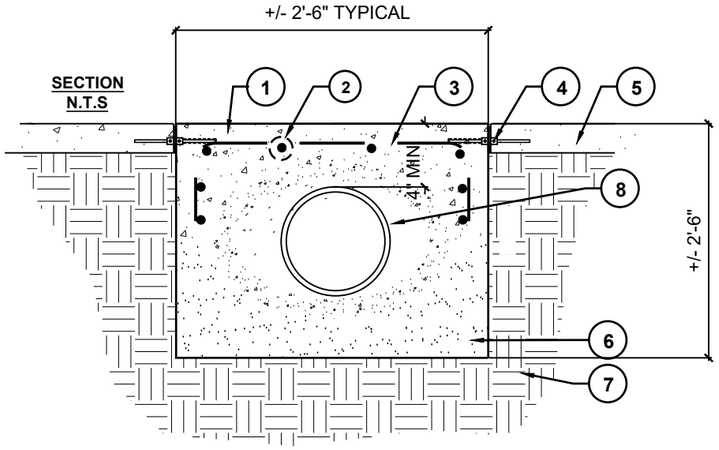

DETAIL NOTES:

1. CONCRETE PAVEMENT.
2. (4) #3 REBARS @ EQUALLY SPACING
3. #3 REBAR @ 36" O.C.
4. EXPANSION JOINT, **SEE DETAIL # 2, SHEET LD101**
5. CONCRETE PAVEMENTL, **SEE LAYOUT PLAN FOR TYPE & FINISH.**
6. CEMENT STABILIZED SAND
7. 95% COMPACTED SUB-BASE
8. 6" SCH 80 PVC PIPE.
9. BASE OF SWALE

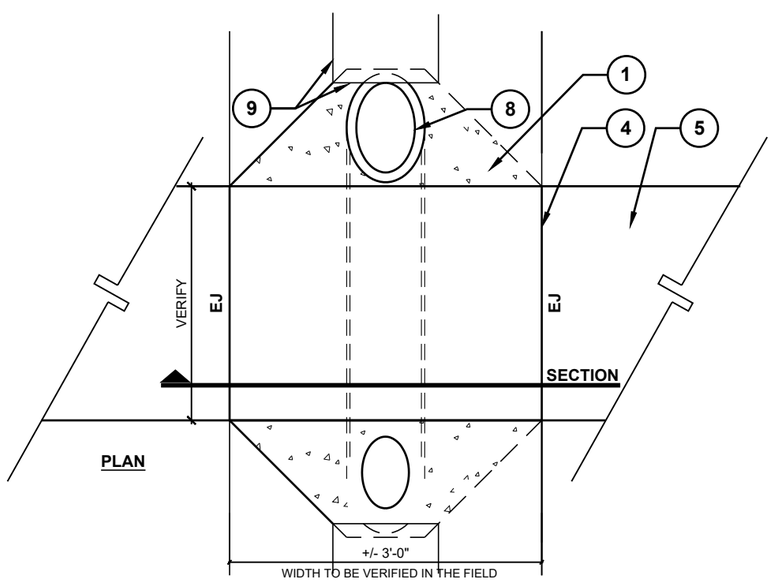

3 PAVEMENT DRAINAGE CROSSING (Incidental to 0528) NOT TO SCALE

MUTCD W11-15

MUTCD W11-15P

TRAIL CROSSING SIGN
(Pay Item 0636-6002)

MUTCD D11-1

SUP TRAIL SIGN
(Pay Item 0636-6001)

GENERAL NOTES

A. POST, FOUNDATION, AND SIGN COMPLETE AND IN PLACE SHALL BE PAID UNDER THE APPLICABLE UNIT PRICE
B. SEE SMP (twt)-08 FOR POST AND FOUNDATION INFORMATION.

3 SHARED USE PATH SIGNAGE 1/16"=1'-0"

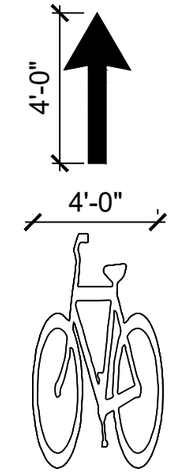

GENERAL NOTES
(PAY ITEMS 0668+6096, 0678-6096)
& (0668-6094) 678-6024

2 BIKE ROUTE SURFACE MARKER 1/8"=1'-0"

DETAIL NOTES:

1. PLANTING BED, **SEE PLANTING PLANS.**
2. LANDSCAPE AREA AND/OR PLANTING
3. 3/4" CHAMFER TYPICAL ALL EDGES
4. CONCRETE LANDSCAPE CURB (PAY ITEM NO. 0528-6033) NATURAL COLORED CONCRETE BAND, WITH HAND TOOLED SCORE JOINTS AT 4'-0" O.C. AND EXPANSION JOINTS AT 25'-0" O.C. OR ABUTTING HARD SURFACES.
5. 95% COMPACTED OR UNDISTURBED
6. (2) #3'S ON LENGTH OF BAND, #3'S AT 24" O.C.

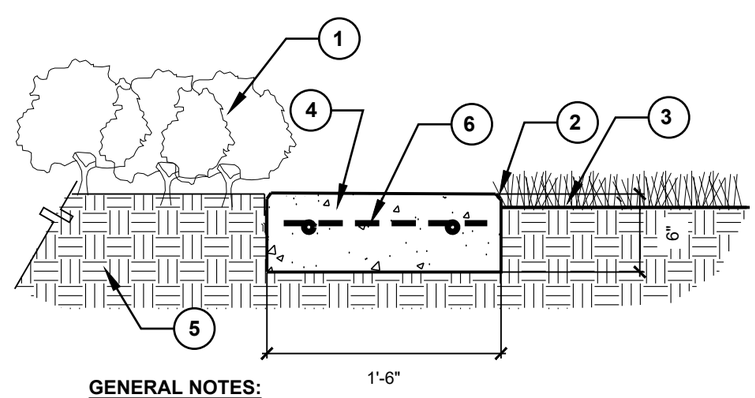

GENERAL NOTES:

A. CONCRETE LANDSCAPE CURB TO BE PROVIDED ALONG ALL PLANTING BEDS ADJACENT TO TURF GRASS AREAS AS PER PLANTING PLANS

1 CONCRETE CURB (LANDSCAPE) (Pay Item 0529-6033) SCALE 3/4"=1'-0"

STATE OF TEXAS
MICHAEL P. MAUER
1510
REGISTERED
LANDSCAPE ARCHITECT
March 13, 2023

FLATIRON/DRAGADOS LLC

M2L Associates Inc.
Houston, Texas 77024
T: 713-722-8897 F: 713-722-8048
Landscape Architecture
Land Planning Urban Design

Texas Department of Transportation 2016

US 181 HARBOR BRIDGE

CONSTRUCTION DETAILS

SHEET 3 OF 9

DESIGN	FED.RD. DIV.NO.	FEDERAL AID PROJECT NO.		HIGHWAY NO.
GRAPHICS	X	(See Title Sheet)		
	STATE	DISTRICT	COUNTY	SHEET NO.
CHECK	TEXAS	CRP	NUECES	LD103
CHECK	CONTROL	SECTION	JOB	
	0101	06	095	123

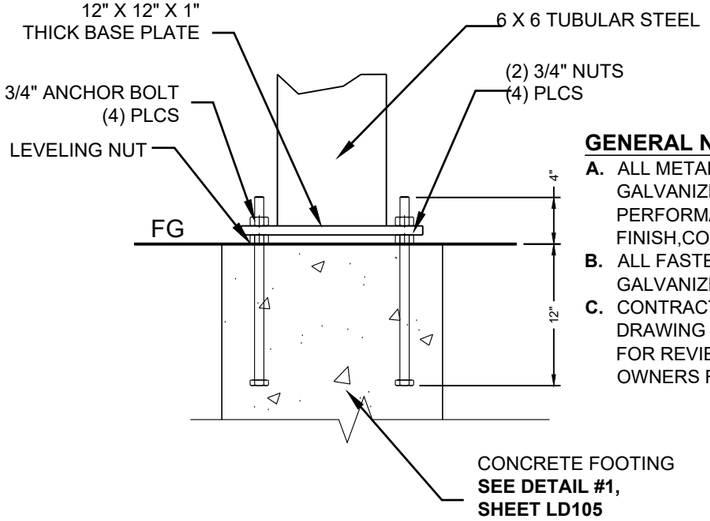

GENERAL NOTES

A. ALL METAL TO BE HOT DIPPED GALVANIZED, WITH HIGH PERFORMANCE URETHANE FINISH,COLORS TO BE SELECTED.

B. ALL FASTENERS TO BE HOT DIPPED GALVANIZED.

C. CONTRACTOR TO PROVIDE SHOP DRAWING WITH SIGNAGE SCHEDULE FOR REVIEW AND APPROVAL BY OWNERS REPRESENTATIVE.

5 SIGNAGE BASE PLATE — NOT USED

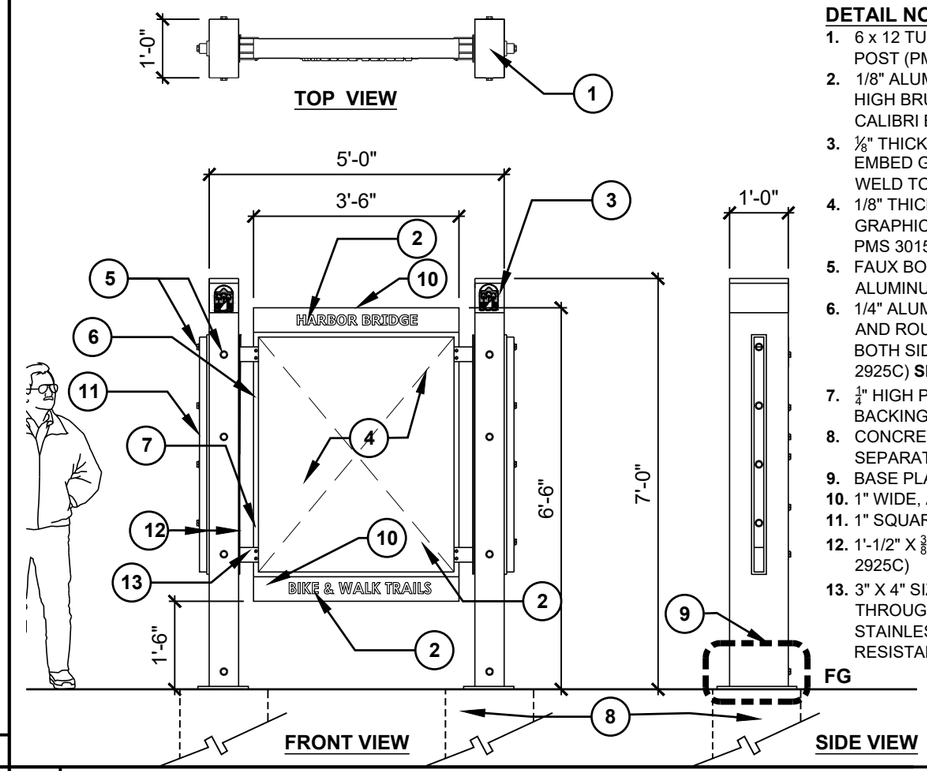

DETAIL NOTES:

1. 6 x 12 TUBULAR STEEL, HIGH PERFORMANCE PAINTED POST (PMS COLOR 3015 C)
2. 1/8" ALUMINUM SHEET COPY PLATE DRILLED TO ACCEPT 2" HIGH BRUSHED ALUMINUM LETTERS STUD MOUNTED, CALIBRI BOLD FONT.
3. $\frac{1}{8}$" THICK X 6" X 6" ALUMINUS SQUARE TUBE WITH DIRECT EMBED GRAPHICS LOGO (CITY OF CORPUS CHRISTI,SPOT WELD TO TUBULAR POST, **SEE DETAIL # 3, THIS SHEET**
4. 1/8" THICK ALUMNUM SINGAGE INSERT WITH THERMAL GRAPHIC OVERLAY ON ONE SIDE, EPOXY TO BACKING (PMS 3015C) **SEE DETAIL #4 THIS SHEET.**
5. FAUX BOLTING TYPICAL(1" DIA X 1/2" HIGH BRUSH ALUMINUM TACK WELDED TO FRAME.
6. 1/4" ALUMINUM SIGN PANEL WIHT 3/4" MOUNTING BRACKET AND ROUTED TO ACCOMODATE STUDES AND FASTENING, BOTH SIDES HIGH PERFORMANCE PAINTED (PANTONE 2925C) **SEE DETAIL # 4, THIS SHEET**
7. $\frac{1}{4}$" HIGH PERFORMANCE PAINTED ALUMINUM SHEET PANEL BACKING (PANTONE 2925C)
8. CONCRETE FOOTING (INCIDENTAL AND NOT PAID FOR SEPARATELY), **SEE DETAIL #2, LD105**
9. BASE PLATE DETAIL, **SEE DETAIL #5, THIS SHEET**
10. 1" WIDE, ALUMINUM SIGN BOX, PAINTED (PANTONE 3015 C)
11. 1" SQUARE ALUMINUM TRIP PIECE (PANTONE 2925C)
12. 1'-1/2" X $\frac{3}{8}$" THICK ALUMINUM SHEET TRIM PIECE (PANTONE 2925C)
13. 3" X 4" SIZE WITH $\frac{1}{8}$" FINS, ALUMINUM U-BRACKET WITH THROUGH BOLT ATTACHMENTS TO SIGN BACKING, STAINLESS STEEL MACHINE BOLTS WITH VANDAL RESISTANT HEADS

2 SHARED USE PATH TRAIL HEAD SIGNAGE (Pay Item 1002-6006) — SCALE 3/8"=1'-0"

GENERAL NOTES

A. METAL GRAPHICS TO BE DIRECT EMBED POWDER COATING SYSTEMS ATTN. Joe Nolan x 116 Senior Designer joen@directembedcoating.com | Cell: 973-919-5050

B. 1/4" ALUMINUM.

C. CONTRACTOR TO PROVIDE SHOP DRAWING WITH SIGNAGE SCHEDULE FOR REVIEW AND APPROVAL BY OWNERS REPRESENTATIVE. LANDSCAPE ARCHITECT TO PROVIDE CAMERA READY ARTWORK.

D. APPROVED SIGN FABRICATOR;
WILLIAMS ARCHITECTURAL SIGNAGE
ATTN: ED WILLIAMS
(281) 802-3546
email: ewilliams8831@gmail.com

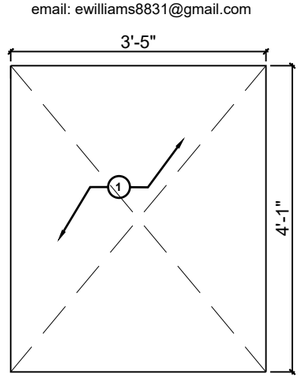

4 SUP GRAPHIC PANELS — SCALE 1/2"=1'-0"

GENERAL NOTES:

LANDSCAPE ARCHITECT TO PROVIDE (CAMERA READY ART WORK)

DETAIL NOTES:

1. $\frac{1}{8}$" THICK ALUMINUM BACKING PAINTED WHITE
2. THERMAL ETCHED LOGO (2 SIDES OF SQUARE CAP) DIRECT EMBED GRAPHICS, PMS 3025C). EPOXY ON TO POST.
3. $\frac{1}{8}$" THICK ALUMINUM SHEET POST CAP (PMS3025C)

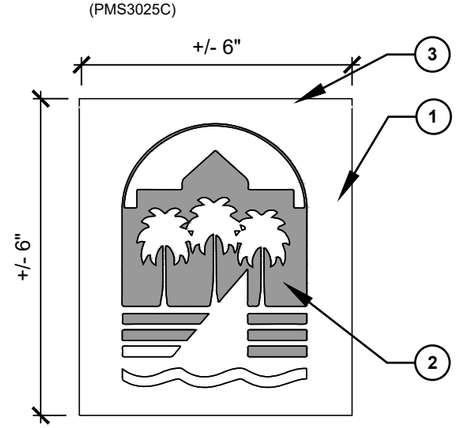

3 CITY LOGO DETAIL — SCALE 1-1/2"=1'-0"

GENERAL NOTES:

A. CONTRACTOR TO PROVIDE ENGINEERED SHOP DRAWINGS FOR ALL SIGNAGE ELEMENTS, INCLUDING FABRICATION, METALWORK, FINISHING, AND CONCRETE FOUNDATIONS(Incidental to 1002)

B. HIGH PERFORMANCE, SALT RESISTANCE COATINGS ARE REQUIRED FOR ALL PAINTED SURFACES.

C. GRAPHIC SIGNAGE VERBAGE/GRAPHICS TO BE PROVIDED BY LANDSCAPE ARCHITECT AND/OR OWNER'S REPRESENTATIVE FOR USE BY CONTRACTOR TO FABRICATE AND INSTALL SIGNAGE.

D. ALL EXPOSED METAL TO BE STAINLESS STEEL AS NOTED ON DRAWINGS.

E. METAL GRAPHICS BY DIRECT EMBED(PATTERSON, NY, 201-430-6929, KEVIN@DIRECTEMBEDCOATING.COM

F. SEE DETAIL #2 THIS SHEET FOR TRAILHEAD SIGNAGE

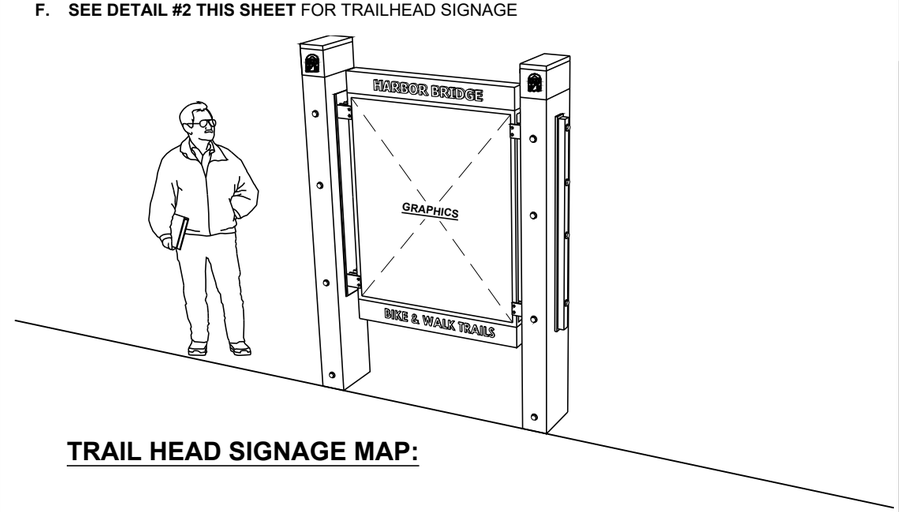

TRAIL HEAD SIGNAGE MAP:

1 SHARE USE PATH CUSTOM SIGNAGE — SCALE 1/4"=1'-0"

STATE OF TEXAS
MICHAEL P. MAUER
1510
REGISTERED
LANDSCAPE ARCHITECT
March 13, 2023

FLATIRON/DRAGADOS LLC

M2L Associates Inc.
Houston, Texas 77024
T: 713-722-8897 F: 713-722-8048
•Landscape Architecture•
•Land Planning• Urban Design•

Texas Department of Transportation ® 2016

US 181 HARBOR BRIDGE

CONSTRUCTION DETAILS

SIGNAGE

SHEET 4 OF 9

DESIGN	FED.RD. DIV.NO.	FEDERAL AID PROJECT NO.		HIGHWAY NO.
GRAPHICS	X	(See Title Sheet)		
	STATE	DISTRICT	COUNTY	SHEET NO.
CHECK	TEXAS	CRP	NUECES	LD104
CHECK	CONTROL	SECTION	JOB	
	0101	06	095	124

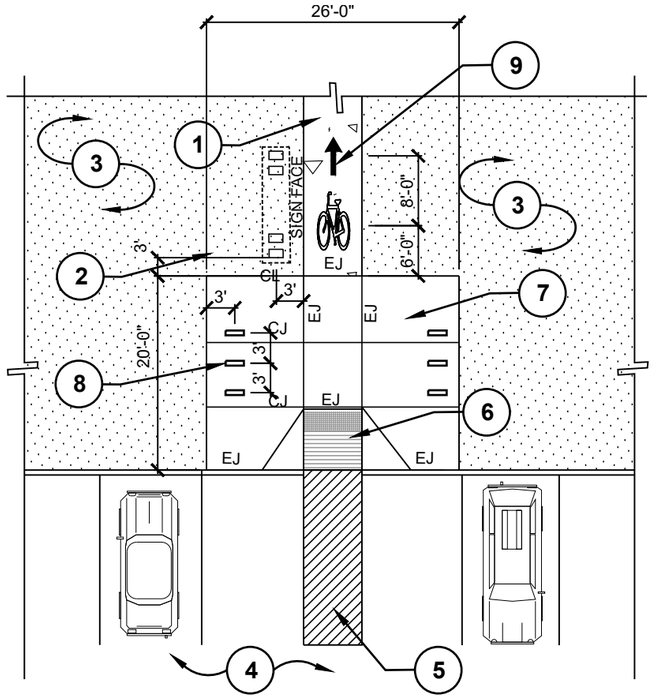

DETAIL NOTES:

1. SHARED USE PATH TRAIL, **SEE CIVIL DRAWINGS**
2. TRAIL HEAD MAP, **SEE DETAIL #2, SHEET LD104,** (Pay Item 1002-6002)
3. SEE LANDSCAPE DRAWINGS
4. PARKING LOT PAVING, **SEE CIVIL ENGINEERING DRAWINGS**.
5. COORDINATE WITH SITE CIVIL ON STRIPING OF PARKING AREA
6. TYPE 20 ACCESS RAMP, **SEE CIVIL ENGINEERING DRAWINGS.**
7. CONCRETE SIDEWALK (4"), **SEE SHEET PED-18,** (Pay Item 0531-6001)
8. BIKE RACK (TOTAL OF 6) , **SEE DETAIL 4, SHEET SUP102 SHEET SUP102**(Pay Item 1002-6007)
9. BIKE SYMBOL AND ARROW, **SEE DETAIL #2,CONSTRUCTION DETAIL SHEET 3 OF 10.**

5 PEDESTRIAN PLAZA ENLARGEMENT PLAN — SCALE 1/16"=1'-0"

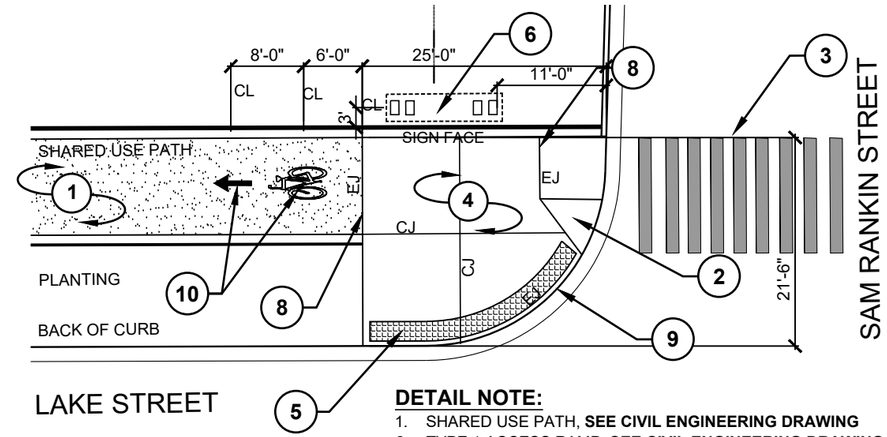

DETAIL NOTE:

1. SHARED USE PATH, **SEE CIVIL ENGINEERING DRAWING**
2. TYPE 1 ACCESS RAMP, **SEE CIVIL ENGINEERING DRAWING**
3. THERMAL CROSSWALK STRIPING, **SEE CIVIL ENGINEERING DRAWING**
4. CONCRETE SIDEWALK (4"), **SEE SHEET PED-18,** (Pay Item 0531-6001)
5. TRUNCATED DOME PAVERS AT FLUSH, ROADWAY INTERFACE, SEE TYPE 5 ACCESS RAMP **SEE SHEET PED-18** (Incidental TO 0531)
6. TRAIL HEAD SIGNAGE, **SEE DETAIL #2, SHEET LD104**(Pay Item 1002-6006)
7. CONSTRUCTION JOINT, **SEE DETAIL #3, SHEEET LD101** Incidental to 0531).
8. EXPANSION JOINT W/SEALANT, **DETAIL #2, SEE SHEET LD101,** (Incidental).
9. EXISTING ROADWAY CURB.
10. BIKE SYMBOL AND ARROW, **SEE DETAIL #2,CONSTRUCTION DETAIL SHEET 3 OF 10.**

2 LAKE STREET SUP ENTRANCE — SCALE 1/16"=1'-0"

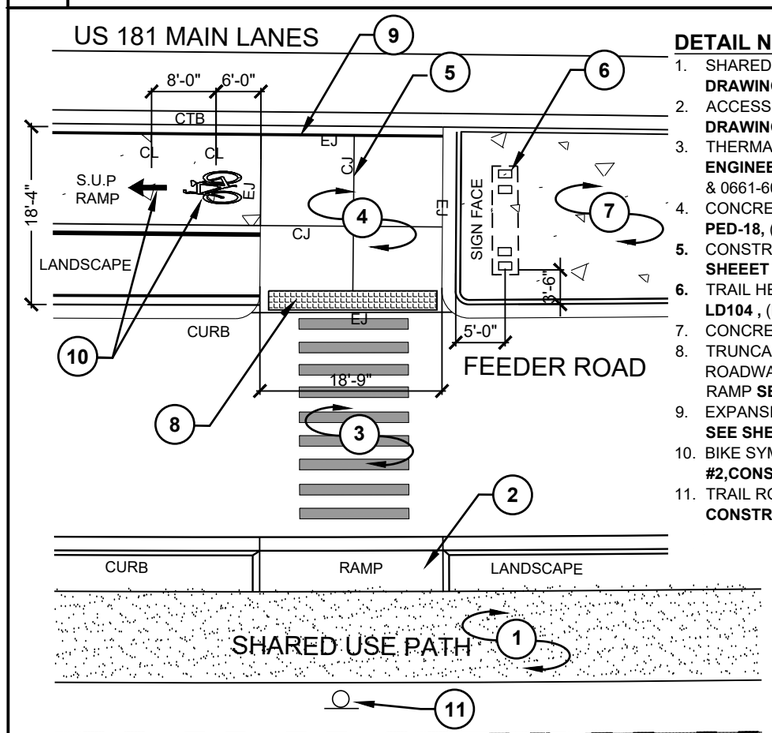

DETAIL NOTE:

1. SHARED USE PATH, **SEE CIVIL ENGINEERING DRAWING**
2. ACCESS RAMP, **SEE CIVIL ENGINEERING DRAWING**
3. THERMAL CROSSWALK STRIPING, **SEE CIVIL ENGINEERING DRAWING** (Pay Items 0666-6180 & 0661-6006)
4. CONCRETE SIDEWALK (4"), **SEE SHEET PED-18,** (Pay Item 0531-6001)
5. CONSTRUCTION JOINT, **SEE DETAIL #3, SHEEET LD101** Incidental to 0531)
6. TRAIL HEAD SIGNAGE, **DETAIL #1, SEE SHEET LD104 ,** (Pay Item 1002-6006)
7. CONCRETE RIP RAP**, SEE CIVIL DRAWINGS**
8. TRUNCATED DOME PAVERS AT FLUSH, ROADWAY INTERFACE, SEE TYPE 5 ACCESS RAMP **SEE SHEET PED-18** (Incidental TO 0531)
9. EXPANSION JOINT W/SEALANT, **DETAIL #2, SEE SHEET LD101,** (Incidental TO 0531)
10. BIKE SYMBOL AND ARROW, **SEE DETAIL #2,CONSTRUCTION DETAIL SHEET 3 OF 10.**
11. TRAIL ROUTE SIGN, **SEE DETAIL #3. CONSTRUCTION DETAILS SHEET 3 OF 10.**

4 NORTH SHARED USE PATH TRAIL HEAD — SCALE 1/16"=1'-0"

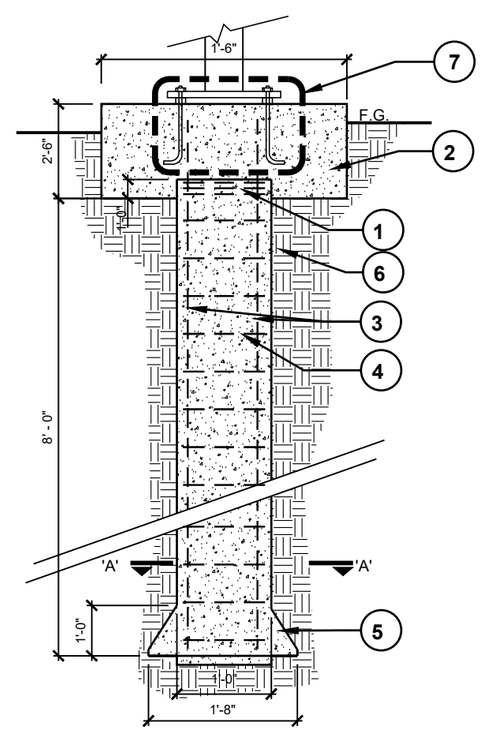

DETAIL NOTES:

1. (3) - #3 HORIZONTAL TIES ADDITIONAL.
2. REINFORCED CONCRETE GRADE BEAM, SEE INDIVIDUAL DETAILS FOR REINFORCING INFORMATION,
3. (6) - #6'S VERTICAL, EXTEND INTO GRADE BEAM.
4. # 4 HORIZONTAL TIES @ 10" O.C.
5. CONCRETE BELL.
6. UNDISTURBED SOIL.
7. BASE PLATE ATTACHMENT, **SEE DETAIL #5, SHEET LD104**

GENERAL NOTES:

A. INFORMATION PROVIDED IS FOR REFERENCE PURPOSES ONLY.
B. CONTRACTOR TO PROVIDE SEALED ENGINEER DRAWINGS FOR PROPOSED WAYFINDING SIGNAGE SUITABLE FOR LOCAL SOIL CONDITIONS(Incidental to wayinding signage pay item).

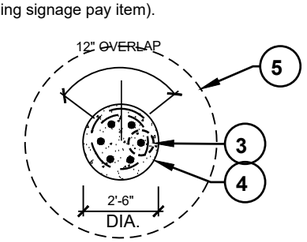

SECTION 'A'
NOT TO SCALE

1 SHARED USE PATH CONCRETE FOOTING AND BASE PLATE — NOT TO SCALE

STATE OF TEXAS
MICHAEL P. MAUER
1510
REGISTERED
LANDSCAPE ARCHITECT
March 13, 2023

FLATIRON/DRAGADOS LLC

M2L Associates Inc.
Houston, Texas 77024
T: 713-722-8897 F: 713-722-8048
•Landscape Architecture•
•Land Planning•Urban Design•

Texas Department of Transportation ® 2016

US 181 HARBOR BRIDGE

CONSTRUCTION DETAILS

Shared Use Path

SHEET 5 OF 9

DESIGN	FED.RD. DIV.NO.	FEDERAL AID PROJECT NO.		HIGHWAY NO.
GRAPHICS	X	(See Title Sheet)		
	STATE	DISTRICT	COUNTY	SHEET NO.
CHECK	TEXAS	CRP	NUECES	LD105
CHECK	CONTROL	SECTION	JOB	
	0101	06	095	125

DETAIL NOTES:

1. 4" DIAMETER SOLAR TILE INSERT, SEE LANDSCAPE LAYOUT AND LIGHTING PLANS.
2. USE WATERPROOF SILCONE TO ADHERE TILES INTO PLACE PER MANUFACTURER'S RECOMMENDATIONS.
3. CONCRETE PAVEMENT, SOLAR TILE SHALL BE FLUSH WITH CONCRETE OR ADJACENT PAVEMENT TYPES.
4. CAST INTO PAVEMENT OR SANDBLAST TO REQUIRED DEPTH. IF CASTING IN PLACE, CONTRACTOR TO PROVIDE WOOD LEAVE-OUT TO THE DEPTH AND WIDTH NEEDED FOR A FLUSH INSTALLATION. EXPOXY INTO PLACE AND MORTAR AROUND THE SOLAR TILE WITH COLRED GROUT TO MATCH SURROUNDING PAVEMENT. CONTRACTOR TO PROVIDE MEANS AND METHODS APPROACH WITH A MATERIAL SUBMITTAL FOR REVIEW AND APPROVAL OF LANDSCAPE ARCHITECT

SolaTile II 4" Round

MATERIALS NOTES:

SOLATILE II SOLAR POWERED LIGHTING
SOLARPATH INC.
123 TOWN SQUARE PLACE, #333
JERSEY CITY, NJ 07310
TEL: (888)333-7652
CONTACT@SOLARPATHUSA.COM

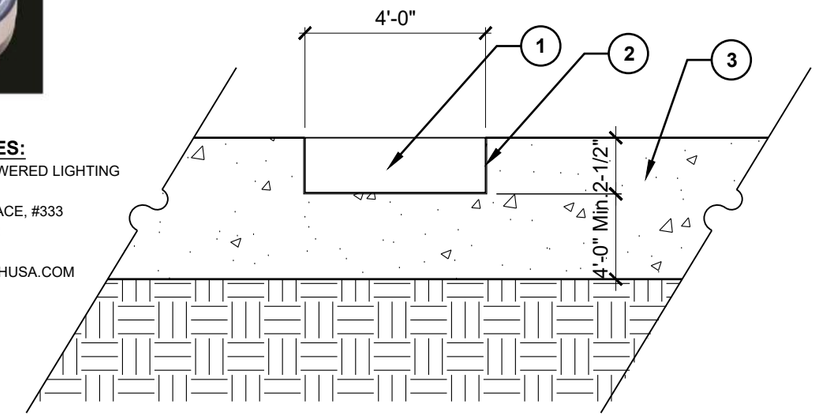

4 NOT USED — NOT USED

2 LED PAVEMENT MARKER (PAY ITEM 1002-6013) — SCALE 3/8"=1'-0"

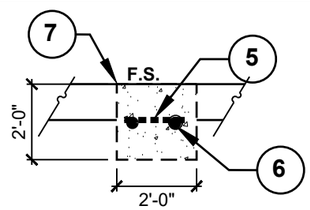

FOUNDATION SECTION (N.T.S)

DETAIL NOTES:

1. 1" DIA. DUAL TUBING CUSTOM BIKE RACK WITH GALVANIZED FINISH.
2. (2) 3/4" DIA. Z 6" LONG ANCHOR BOLTS EMBEDDED INTO CONCRETE FOOTING. PER LETTER
3. 8" x 8" (OR AS NEEDED) GALVANZED ANCHOR PLATE -TYPICAL
4. CONCRETE FOOTING (3000 PSI 28 DAY MINIMUM) INCIDENTAL AND NOT PAID FOR SEPARATELY
5. (2) #5 REBAR CONTINOUS
6. #3 REBAR @ 18" O.C. - TYPICAL
7. COLD JOINT@ ADJACENT PAVING

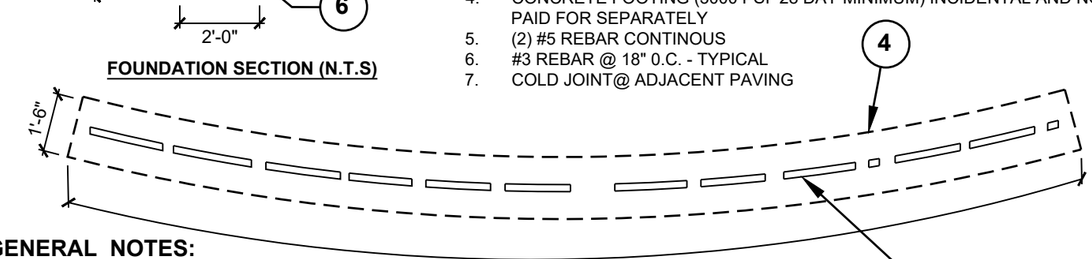

±24'-10"

TOP VIEW

GENERAL NOTES:

A. PARK EXPRESS CUSTOM BIKE RACK (866-293-8528) OR APPROVED EQUAL
ATT: CARRIE GEORGOPOULUS
B. CONTRACTOR TO PROVIDE SHOP DRAWINGS AND LAYOUT INFORMATION FOR REVIEW AND APPROVAL
C. COORDINATE RADIUS OF BIKE RACK LAYOUT WITH PROPOSED PLAZA PAVING

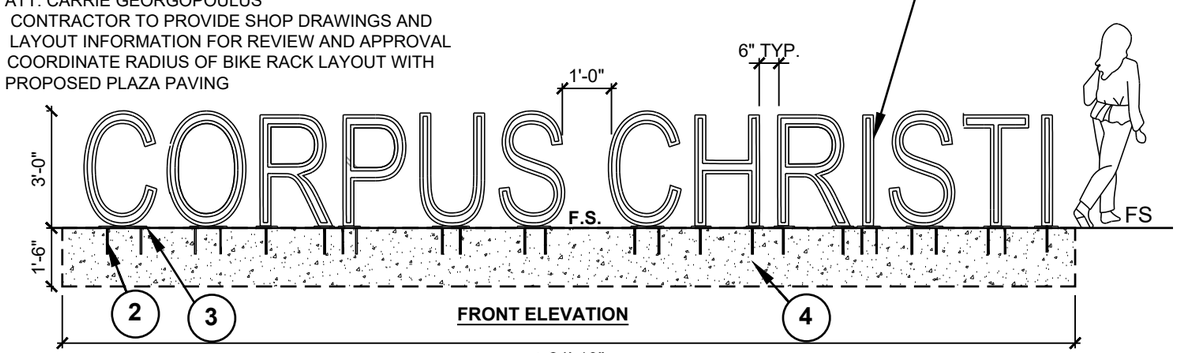

FRONT ELEVATION

± 24'-10"

3 NOT USED — NOT USED

1 CUSTOM BIKE RACK/SIGN (Pay Item 1002-6005) — SCALE 1/4"=1'-0"

STATE OF TEXAS
MICHAEL P. MAUER
1510
REGISTERED
LANDSCAPE ARCHITECT
March 13, 2023

FLATIRON/DRAGADOS LLC

M2L Associates Inc.
Houston, Texas 77024
T: 713-722-8897 F: 713-722-8048
•Landscape Architecture•
•Land Planning•Urban Design•

Texas Department of Transportation ® 2016

US 181 HARBOR BRIDGE

CONSTRUCTION DETAILS

North SUP Plaza

SHEET 6 OF 9

DESIGN	FED.RD. DIV.NO.	FEDERAL AID PROJECT NO.		HIGHWAY NO.
GRAPHICS	X	(See Title Sheet)		
	STATE	DISTRICT	COUNTY	SHEET NO.
CHECK	TEXAS	CRP	NUECES	LD106
CHECK	CONTROL	SECTION	JOB	
	0101	06	095	126

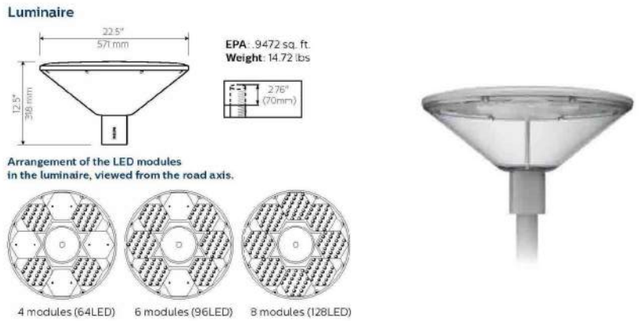

MANUFACTURER NOTES:

A. LUMEC LED, LIGHT FIXTURE BY SIGNIFY (**SEE LIGHTING PLAN, SHEET D402, AND SOUTH PARK CIVIC PLAZA ILLUMINATION PLAN, SHEET 146**)

B. **SEE DETAIL # 6, SHEET LD108** FOR REFERENCE INSTALLATION AND LOCATION

4 TRELLIS LIGHT — SCALE: N.T.S.

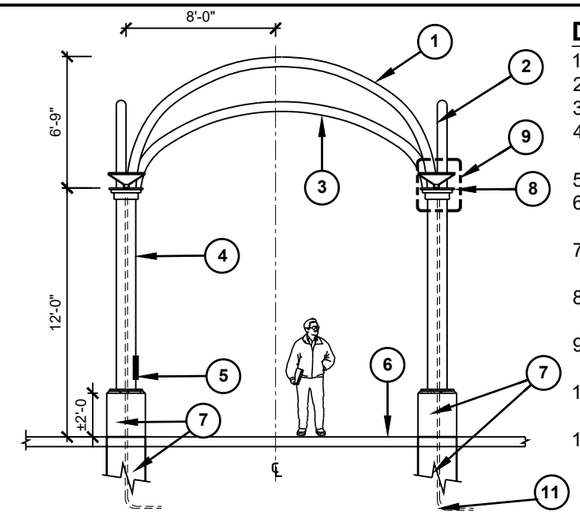

DETAIL NOTES:

1. ARCH TYPE III
2. ARCH TYPEI
3. ARCH TYPE II
4. EXISTING 12" Ø STD. PIPE COLUMN BEYOND
5. ELECTRICAL ACCESS OPENING
6. NEW CONCRETE PAVEMENT, **SEE LAYOUT PLAN**
7. REINFORCED CONCRETE FOUNDATION 145 & 146
8. TYPICAL SLIDING PLATE, SEE DETAIL #2, ON SHEET LD108
9. ARCH COLUMN ATTACHMENT, **SEE DETAIL #3, ON SHEET LD108**
10. NEW LED LIGHT, **SEE DETAIL 4#, THIS SHEET**
11. ELECTRICAL CONDUIT THROUGH CONCRETE SLAB. ELECTRICAL DESIGN BY OTHERS, FOR REFERENCE ONLY

3 TRELLIS SIDE VIEW - Typical — SCALE 1/8"=1'-0"

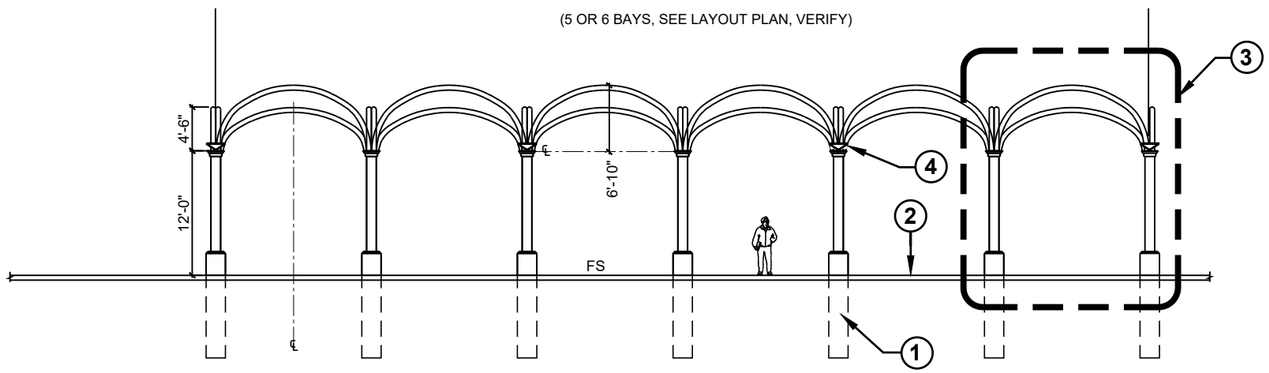

DETAIL NOTES

1. REINFORCED CONCRETE FOUNDATION, **SEE ALAMEDA STRUCTURAL DETAIL SHEET 143, 144, & 145.**
2. PROPOSED PAVEMENT , **SEE LAYOUT PLANS**
3. TYPICAL TRELLIS DETAIL, **SEE DETAIL #3, THIS SHEET.**
4. NEW LED LIGHT FIXTURE, **SEE DETAIL #4, THIS SHEET.**

2 TRELLIS ELEVATION - Partial — SCALE 1/16"=1'-0"

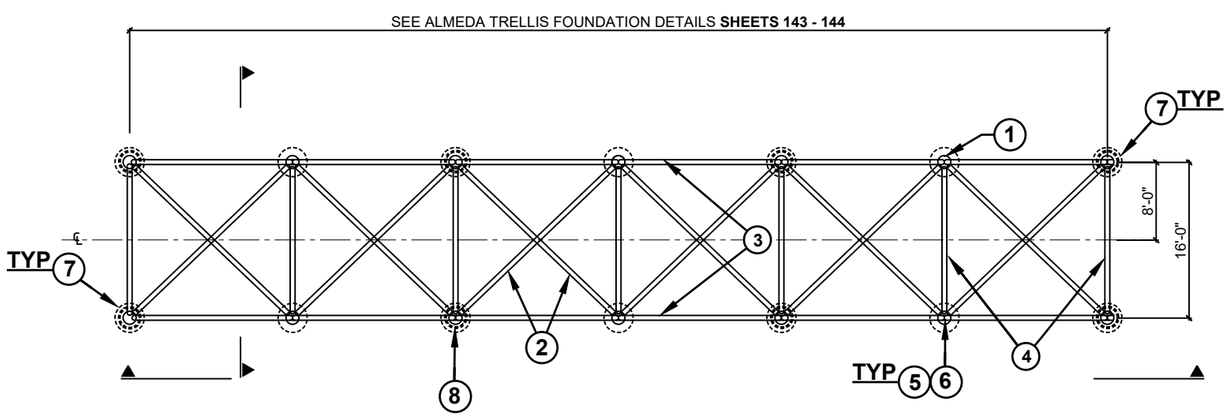

DETAIL NOTES

1. FIXED SLIDE JOINT
2. ARCH TYPE III
3. ARCH TYPE I
4. ARCH TYPE II
5. TYPICAL SLIDING PLATE, **SEE DETAIL #2, ON SHEET LD108**
6. ARCH COLUMN ATTACHMENT, **SEE DETAIL #3, ON SHEET LD108**
7. REINFORCED CONCRETE FOUNDATION, **SEE ALAMEDA STRUCTUAL DETAILS 143, 144, & 145, AND #3, THIS SHEET.**
8. NEW LED LIGHT FIXTURE, **SEE DETAIL #4, THIS SHEET.**

1 TRELLIS PLAN VIEW - Partial — SCALE 1/16"=1'-0"

A. CONTRACTOR TO COORDINATE RELOCATING EXISTING TRELLIS STRUCTURE AND MISCELLANEOUS PARTS FROM HOLDING AREA FROM GENERAL CONTRACTOR.

B. CONTRACTOR SHALL NOTIFY THE OWNER'S REPRESENTATIVE IMMEDIATELY IF SALVAGED EQUIPMENT IS DAMAGED, INCOMPLETE, OR IN A CONDITION NOT APPROPRIATE FOR REUSE.

C. CONTRACTOR SHALL VERIFY THE CONDITION AND COMPLETENESS OF THE EXISTING MATERIAL TO BE REASSEMBLED AT THE DESIGNATED SITE. ONLY ORIGINAL EQUIPMENT AND MATERIALS SHALL BE USED UNLESS OTHERWISE NOTED IN THE DRAWINGS

D. ANY DAMAGED AND/OR MISSING EQUIPMENT, MATERIALS, AND FASTNERS SHALL BE REPLACED WITH SIMILAR FINISHED TO ORIGINAL EQUIPMENT AND MATERIALS IF RESTORATION IS NOT POSSIBLE, I.E GALVANIZED FINISH.(Incidental To 1002)

E. CONTRACTOR TO UTILIZE NEW LED LIGHTS IN LIEU OF EXISTING EQUIPMENT AS INDICATED IN **SHEET D401,** CONTRACTOR TO PROVIDE MANUFACTURER FINISH AS NOTED. ELECTRICAL DESIGN BY OTHERS, FOR REFERENCE ONLY

F. CONTRACTOR SHALL NOTIFY THE OWNER'S REPRESENTATIVE OF ANY CONDITION THAT MAY AFFECT THE SUCCESSFUL RELOCATION OF THE EXISTING TRELLIS PRIOR TO INITIATING WORK.

G. **SEE STRUCTURAL DRAWINGS SHEETS 143, 144, AND 145.**

GENERAL NOTES (TRELLIS ONLY)

FLATIRON/DRAGADOS LLC

M2L Associates Inc.
Houston, Texas 77024
T: 713-722-8897 F: 713-722-8048
•Landscape Architecture•
•Land Planning• Urban Design•

Texas Department of Transportation ® 2016

US 181 HARBOR BRIDGE

CONSTRUCTION DETAILS

Alameda Trellis

SHEET 7 OF 9

DESIGN	FED.RD. DIV.NO.	FEDERAL AID PROJECT NO.		HIGHWAY NO.
GRAPHICS	X	(See Title Sheet)		
	STATE	DISTRICT	COUNTY	SHEET NO.
CHECK	TEXAS	CRP	NUECES	LD107
CHECK	CONTROL	SECTION	JOB	
	0101	06	095	127

DETAIL NOTES:

1. LED LIGHT FIXTURE, ADJUST TILT AS NEEDED UP TO 15 DEGREES., **SEE DETAIL#4, SHEET LD107, AND SOUTH PARK CIVIC PLAZA ILLUMINATION PLAN SHEET 146**
2. (2) STAINLESS STEEL, M8X45 BOLTS, NUTS, AND (2) M8X40 BOLTS WITH PLAIN SPRING AND WASHER TO ATTACH FIXTURES TO TENON PER MANUFACTURERS RECOMMENDATIONS.
3. 2-3/8" O.D. X 8" SCH 80 GALVANIZED TENON WELDED TO TRELLIS TOP.
4. TRELLIS TOP PLATE
5. TRELLIS ARCHED PIPING BEYOND.

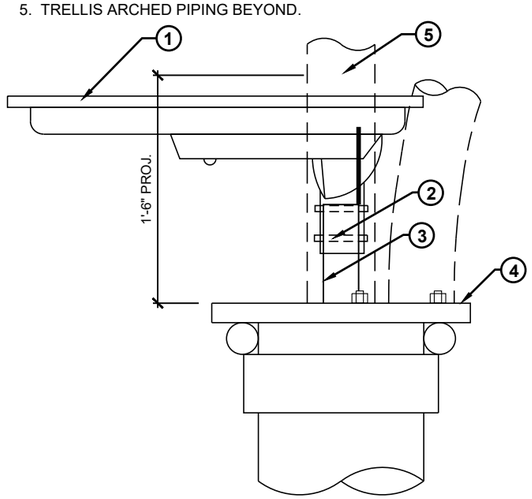

6 LIGHT ATTACHMENT DETAIL — SCALE: 6"=1'-0"

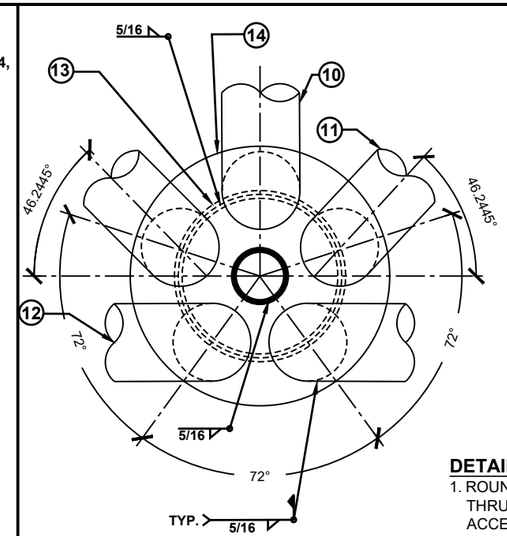

PLAN

GENERAL NOTES:

A. ORIGINAL INSTALLATION AND FABRICATION DETAIL, VERIFY USE IN THE FIELD.

DETAIL NOTES:

1. ROUND TUBE 4"O.D. x 1/4" WALL THRU CAP PL. FOR ELECTRICAL ACCESS BREAK SHARP EDGES AT BOTH ENDS
2. 1/2" SLIDE PL. **SEE DETAIL 2, THIS SHEET**
3. 1 1/2" CAP PL.
4. 2" Ø STD. PIPE
5. PL. 1" x 4 1/2"
6. 12" Ø STD. PIPE COLUMN
7. DRILL AND TAP THRU 3/8" Ø UNC FOR (4) ANTI-THEFT HEAD BOLTS
8. 3/4"R. (TYP)
9. COVER W/ GASKET, **SEE DETAIL #4, THIS SHEET**
10. ARCH TYPE II
11. ARCH TYPE III
12. ARCH TYPE I
13. 12" Ø STD. PIPE COLUMN
14. BEYOND
15. 1 1/2" X 20" Ø CAP PL

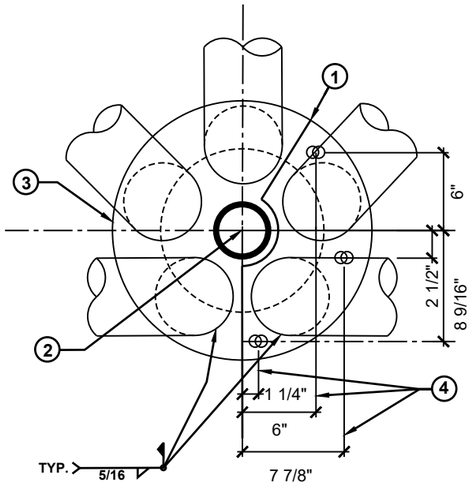

DETAIL NOTES:

1. 1/2" SLIDE PL. @ EXP. JOINT ONLY (DO NOT WELD TO CAP PL.)
2. TRIM SLIDING PL. 2 3/4"R
3. 1 1/2" x 20" Ø CAP PL.
4. 3/4" Ø A36 THREADED RODS x 2 3/4" LG. W/ WASHER & NUT W/ 13/16" Ø HOLES IN CAP PL. & 13/16" x 1 1/2" SLOTS IN SLIDE PL. FINGER TIGHT (SCORE THREADS AFTER INSTALLATION) **SEE DETAIL #5, THIS SHEET**

GENERAL NOTES:

A. ORIGINAL INSTALLATION AND FABRICATION DETAIL, VERIFY USE IN THE FIELD.

2 TYP. SLIDING PLATE DETAIL — SCALE 1/8"=1'-0"

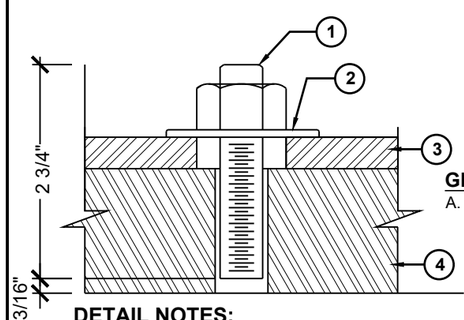

GENERAL NOTES:

A. ORIGINAL INSTALLATION AND FABRICATION DETAIL, VERIFY USE IN THE FIELD

DETAIL NOTES:

1. 3/4" Ø 6" THD. ROD
2. PLATE WASHER 1/8" X 2 3/4" Ø W/ 13/16" v HOLE @ CENTER
3. 1/2" SLIDE PL.
4. 1 1/2" CAP PL.

5 BOLT DETAIL — SCALE: 6"=1'-0"

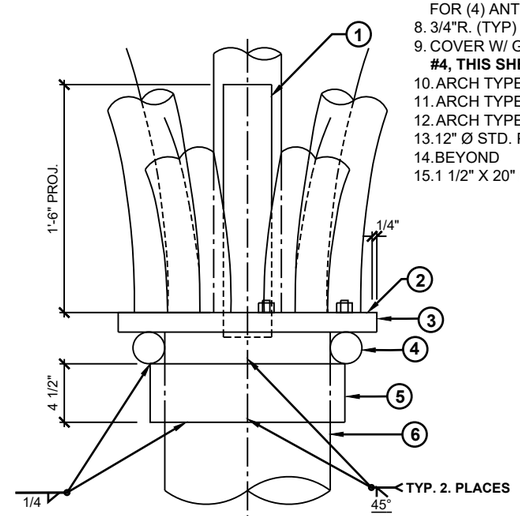

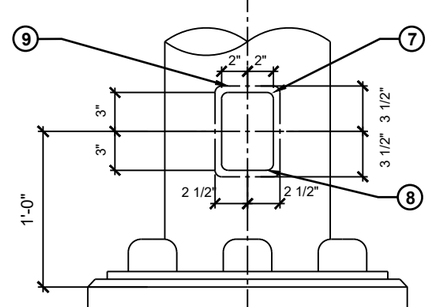

ELEVATION

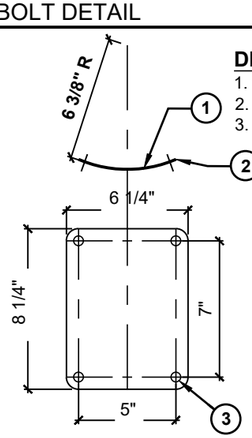

DETAIL NOTES:

1. 10 GA. A36 ROLLED
2. BREAK ALL EDGES
3. 7/16" Ø HOLES MATCH W/ TAPPED HOLED ON COL.

GENERAL NOTE:

A. USE WITH 1/8" THK. x 1 1/4" WIDE NEOPRENE GASKET

B. ORIGINAL INSTALLATION AND FABRICATION DETAIL, VERIFY USE IN THE FIELD

4 PLATE DETAIL — SCALE: 1-1/2=1'-0"

3 ARCH COLUMN ATTACHMENT DETAIL — SCALE: 1"=1'-0"

1 NOT USED

DISCLAIMER :

A. THE INFORMATION PROVIDED HEREIN ARE FOR REFERENCE PURPOSES ONLY. M2L ASSOCIATES MAKES NO CLAIMS AND/OR WARRANTIES AS TO THEIR USE AND APPLICABLE AS-BUILT SITE CONDITIONS.

B. CONTRACTOR TO VERIFY ALL DIMENSIONS IN THE FIELD AND MAKE ADJUSTMENTS AS NECESSARY TO ENSURE A SAFE AND VIABLE INSTALLATION.

C. THE DETAILS PROVIDED WERE FROM THE ORIGINAL INSTALLATION AND FABRICATION DETAILS. CONTRACTOR SHALL UTILIZE THESE DETAILS AS A BASIS FOR REINSTALLATION OF THE EXISTING RE-PURPOSED TRELLIS.

D. CONTRACTOR SHALL MAKE NECESSARY CHANGES, ADJUSTMENTS AS NEEDED BASED ON THE MOST RECENT LOCAL BUILDING CODES AND STANDARDS AND FOR EXISTING SITE CONDITIONS WHERE THE TRELLIS IS TO BE RELOCATED TO.

E. REFER TO ALAMEDA STRUCTURAL DRAWING **SHEETS 143, 144, & 145.**

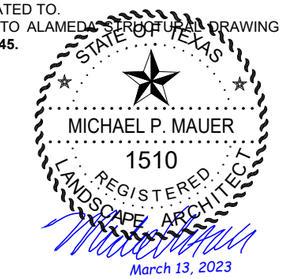

FLATIRON/DRAGADOS LLC

M2L Associates Inc.
Houston, Texas 77024
T: 713-722-8897 F: 713-722-8048
•Landscape Architecture•
•Land Planning• Urban Design•

Texas Department of Transportation ® 2016

US 181 HARBOR BRIDGE

CONSTRUCTION DETAILS

Alameda Trellis

SHEET 8 OF 9

DESIGN	FED.RD. DIV.NO.	FEDERAL AID PROJECT NO.		HIGHWAY NO.
GRAPHICS	X	(See Title Sheet)		
	STATE	DISTRICT	COUNTY	SHEET NO.
CHECK	TEXAS	CRP	NUECES	LD108
CHECK	CONTROL	SECTION	JOB	
	0101	06	095	128

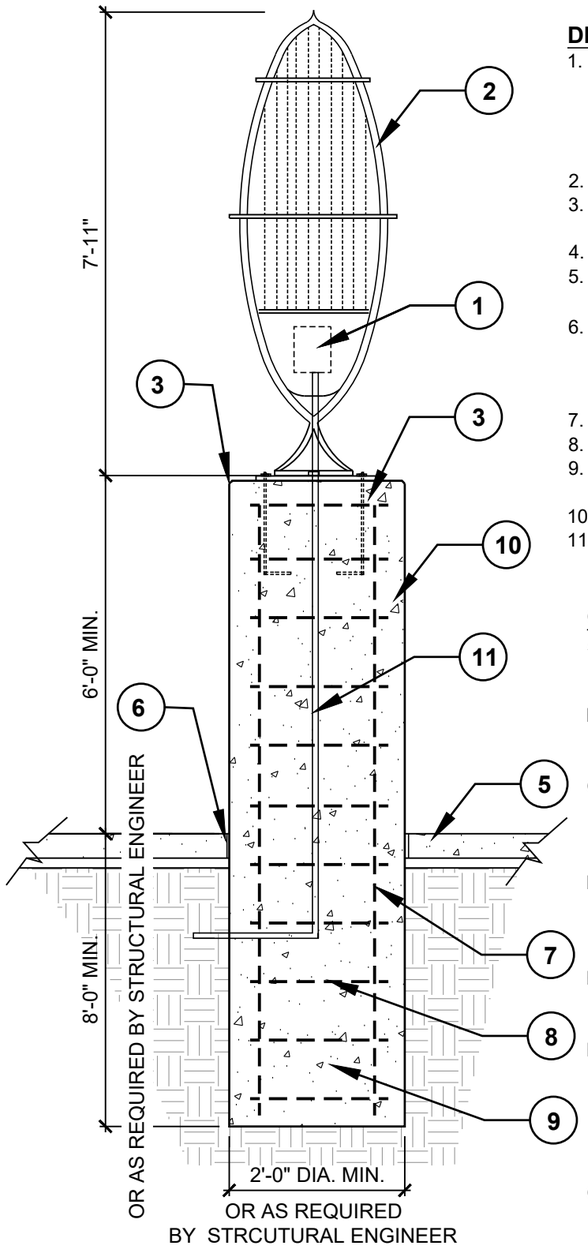

DETAIL NOTES:

1. LED LIGHTS WITHIN WIND HARP BASE, FABRICATED WITH WIND HARP PER FABRICATORS RECOMMENDATIONS INCLUDING SELECTION OF LOW VOLTAGE LED LIGHT FIXTURE.
2. WIND HARP
3. ANCHOR BOLT AND PLATE, PER FABRICATORS RECOMMENDATIONS
4. 1/2" CHAMFER - TYPICAL
5. CONCRETE PAVEMENT, **SEE LAYOUT PLANS**
6. ½" PREFORMED EXPANSION JOINT WITH SEALANT, COLOR TO MATCH SURROUNDING PAVEMENT COLOR (Incidental to 1002)
7. (6) #6 VERTIAL
8. #4 TIES AT 12" O.C.
9. 3000 PSI AT 28 DAY MINIMUM CONCRETE FOOTING(INCIDENTAL to 1002)
10. AS CAST FINISH ABOVE GROUND
11. 1" SCH 40 PVC CONDUIT FOR LED LIGHT FIXTURE ROUTED TO WIND TURBINE CONTROLLERS AND BATTERY.

GENERAL NOTES:

A. MOHICAN WIND HARPS, LOUDONVILLE, OHIO "NIGHT FIRE" (970-946-5879)**, OR EQUIVALENT**
B. COORDINATE BASE PLATE DIMENSIONS AND ANCHORING REQUIREMENTS WITH FABRICATOR
C. CONTRACTOR TO PROVIDE ENGINEERED, SEALED FOUNDATION DRAWINGS FOR REVIEW BY OWNERS REPRESENTATIVE(Incidental to 1002)
D. ALL MATERIALS TO BE STAINLESS STEEL OR HIGH PERFORMANCE COATINGS SUITABLE FOR COASTAL ENVIRONMENT
E. FABRICATOR TO BE ON-SITE TO SUPERVISE INSTALLATION (Incidental to 1002)
F. PAY ITEM SHALL INCLUDE ALL MATERIALS,SCULPTURE, CONCRETE FOUNDATIONS, INSTALL LIGHTING, COMPLETE AND IN PLACE & FULLY FUNCTIONING (ALL ITEMAS INCIDENTAL TO 1002-6009)
G. FABRICATOR TO PROVIDE SHOP DRAWINGS FOR PROPOSED LED LIGHT FIXTURE AND INSTALLATION DETAIL FOR REVIEW PRIOR TO FABRICATION

4 WIND CHIME (Pay Item 1002-6009) SCALE 3/8"=1'-0"

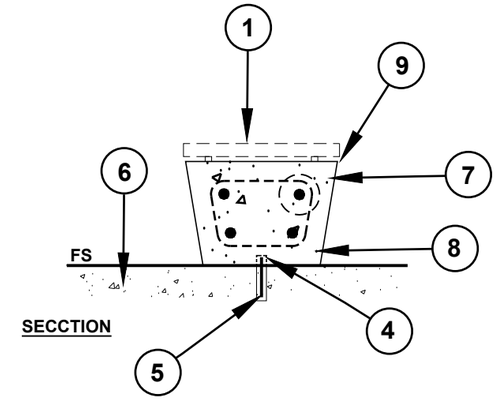

DETAIL NOTES

1. 2X4 RECYCLED PLASTIC LUMBER (GRAY MIURA BOARD)
2. 3/4" X 1" W RECYCLED. PLASTIC LUMBER FURRING STRIP ATTACHED WITH MASONRY ANCHORS @ 12" O.C.
3. TAN, PRE-CAST CONCRETE BENCH MADE WITH ±50% POST CONSUMER MATERIAL
4. 2"Ø X 3" DEEP RECESS MOUNTING CORE 12" FROM EACH END
5. 1"Ø X 6" LONG S.S. DOWEL EPOXY IN PLACE.
6. PROPOSED / EXISTING PAVEMENT
7. (4) #4 HORIZONTAL CONT.
8. #3 HOOP @ 12" O.C.
9. HAND STRIKE EDGES-TOP

MFR NOTE
QCP PRODUCTS
Attn: Anthony Vargas
951-232-0979
anthony.varga@QCP-Corp.com

MFR NOTE
MIURA BOARD
ATHRON LLC
RECYCLED PLASTIC % POST CONSUME***R*** PRODUCT
465 E DEER ST
KOUNTZE, TEXAS 77625
WW.MIURABOARD.COM
409-200-7110

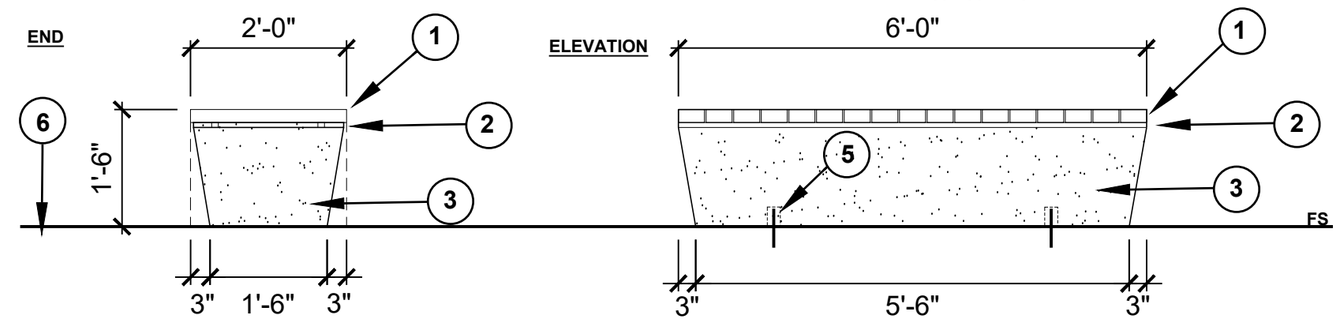

3 RECYCLED PLASTIC AND CONCRETE BENCH (PAY ITEM 1002-6002) SCALE 1/2"=1'-0"

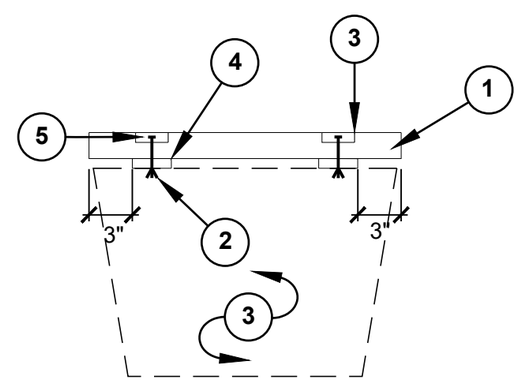

DETAIL NOTES:

1. 2 X 4 RECYCLED PLASTIC LUMBER (MIURA BOARD)
2. 1/4" X 1 1/2" @ 18" O.C. LAG BOLT THROUGH TOP INTO EXPANSION ANCHOR
3. TREX DEK COLOR PLUG TO MATCH PLASTIC BENCH TOP
4. 3/4" X 2" RECYCLED PLASTIC FURRING STRIP-TOP
5. TREX TRANSCEND CORTEX CONCEALED FASTENING SYSTEM BY FASTER MASTER 2-1/2" #8 SCREWS WITH COLOR PLUGS TO MATCH MATERIAL ADJACENT @ 12" O.C. (2) PER BOARD PER FURRING STRIP.

2 BENCH-TOP ATTACHMENT DETAIL SCALE 1"=1'-0"

STATE OF TEXAS
MICHAEL P. MAUER
1510
REGISTERED
LANDSCAPE ARCHITECT
March 13, 2023

FLATIRON/DRAGADOS LLC

M2L Associates Inc.
Houston, Texas 77024
T: 713-722-8897 F: 713-722-8048
Landscape Architecture
Land Planning Urban Design

Texas Department of Transportation 2016

US 181 HARBOR BRIDGE

CONSTRUCTION DETAILS

SITE ELEMENTS

SHEET 9 OF 9

DESIGN	FED.RD. DIV.NO.	FEDERAL AID PROJECT NO.		HIGHWAY NO.
GRAPHICS	X	(See Title Sheet)		
	STATE	DISTRICT	COUNTY	SHEET NO.
CHECK	TEXAS	CRP	NUECES	LD109
CHECK	CONTROL	SECTION	JOB	
	0101	06	095	129

OMITTED

OMITTED

OMITTED

1	NOT USED	
2	NOT USED	SCALE 1/8"=1'-0"
3	NOT USED	

STATE OF TEXAS
MICHAEL P. MAUER
1510
REGISTERED
LANDSCAPE ARCHITECT
March 13, 2023

FLATIRON/DRAGADOS LLC

M2L Associates Inc.
Houston, Texas 77024
T: 713-722-8897 F: 713-722-8048
•Landscape Architecture•
•Land Planning• Urban Design•

Texas Department of Transportation ® 2016

US 181 HARBOR BRIDGE

SHEET 10 OF 10

DESIGN	FED.RD. DIV.NO.	FEDERAL AID PROJECT NO.		HIGHWAY NO.
GRAPHICS	X	(See Title Sheet)		
	STATE	DISTRICT	COUNTY	SHEET NO.
CHECK	TEXAS	CRP	NUECES	LD110
CHECK	CONTROL	SECTION	JOB	
	0101	06	095	130

DISCLAIMER: The use of this standard is governed by the "Texas Engineering Practice Act". No warranty of any kind is made by TxDOT for any purpose whatsoever. TxDOT assumes no responsibility for the conversion of this standard to other formats or for incorrect results or damages resulting from its use.

Wedge Anchor Steel System

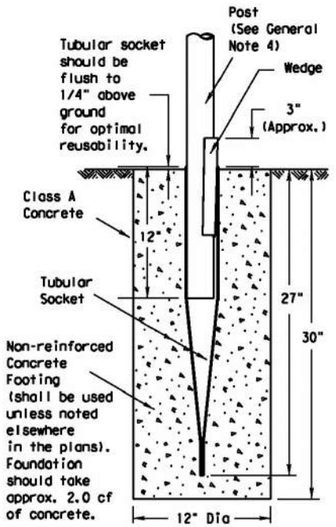

SM RD SGN ASSM TY TWT(X)WS(X)

Wedge Anchor High Density Polyethylene (HDPE) System

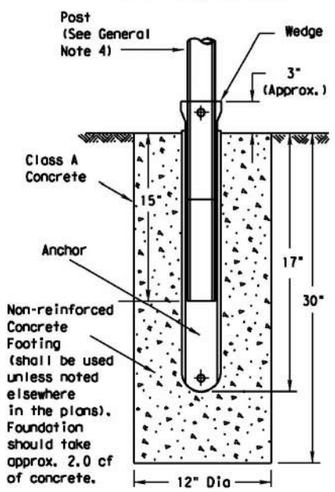

SMD RD SGN ASSM TY TWT(X)WP(X)

Universal Anchor System with Thin-Walled Tubing Post

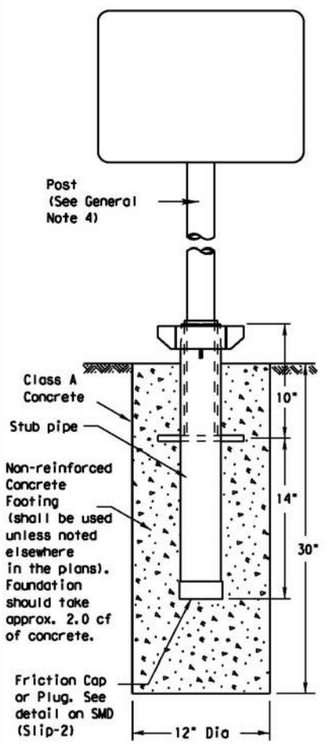

SM RD SGN ASSM TY TWT(X)UA(P)

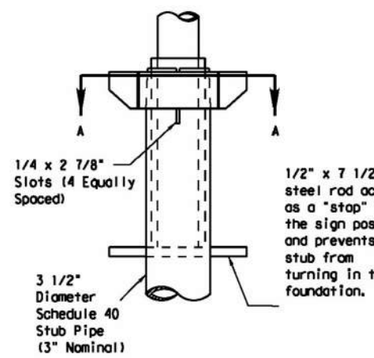

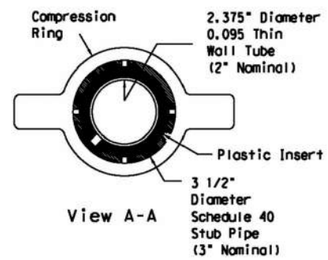

View A-A

Plastic insert must be used when using the TWT with either the Universal Anchor System or the Bolt Down Universal Anchor System. The insert should be approx. 10" long and cover the tubing from just above the top of the stub pipe to the bottom of the sign post when using the Universal Anchor System. The insert should be cut to approx. 4 1/2" when used with the Bolt Down Universal Anchor System.

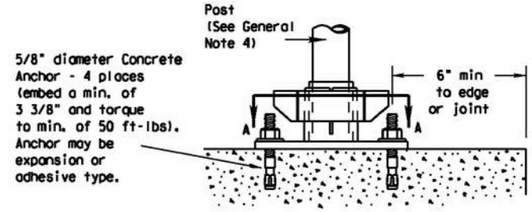

Concrete anchor consists of 5/8" diameter stud bolt with UNC series bolt threads on the upper end. A heavy hex nut per ASTM A563 and hardened washer per ASTM F436. The stud bolt shall have minimum yield and ultimate tensile strengths of 50 and 75 ksi, respectively. Nuts, bolts and washers shall be galvanized per Item 445, "Galvanizing." Top of bolt shall extend at least flush with top of nut when installed. The anchor, when installed in 4000 psi normal-weight concrete with a 3 3/8" minimum embedment, shall have a minimum allowable tension and shear of 2450 and 1525 psi, respectively. Adhesive type anchors shall have stud bolts installed with Type III epoxy per DMS-6100, "Epoxies and Adhesives." Adhesive anchors may be loaded after adequate epoxy cure time per the manufacturer's recommendations.

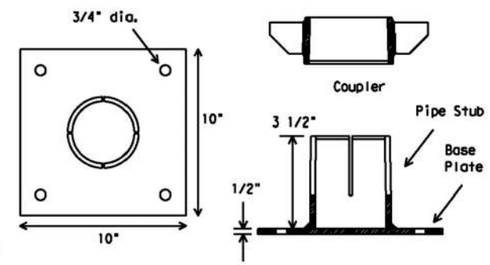

SM RD SGN ASSM TY TWT(X)UB(P)

Sign Installation Using a Prefabricated T-Bracket for Thin-Wall Tubing Post

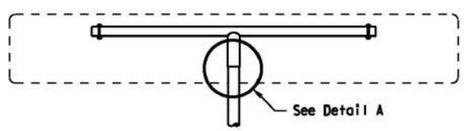

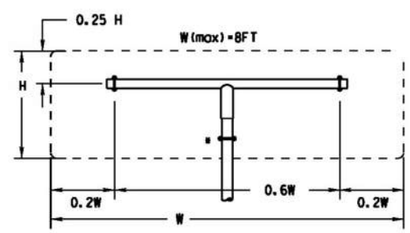

SM RD SGN ASSM TY TWT(X)XX(T)

(* - See General Note 6)

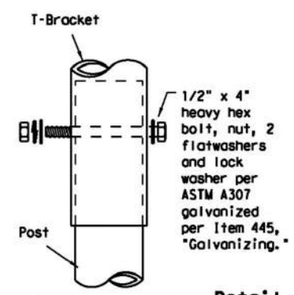

9/16" hole may need to be drilled through post to accommodate bolt.

Detail A

NOTE

The devices shall be installed per manufacturer's recommendations.
Installation procedures shall be provided to the Engineer by Contractor.

GENERAL NOTES:

1. The Wedge Anchor System and the Universal Anchor System with thin wall tubing post may be used to support up to 10 square feet of sign area.
2. The tubular socket, wedge and prefabricated T-bracket shall be permanently marked to indicate manufacturer. Method, design, and location of marking are subject to the approval of the TxDOT Traffic Standards Engineer.
3. Except for posts (13 BWG Tubing), clamps, nuts and bolts, all components shall be prequalified. A list of prequalified vendors may be obtained from the Material Producer List web page. The website address is: http://www.txdot.gov/business/producer list.htm
4. Material used as post with this system shall conform to the following specifications:
   13 BWG Tubing (2.375" outside diameter) (TWT)
   - 0.095" nominal wall thickness
   - Seamless or electric-resistance welded steel tubing
   - Steel shall be HSLAS Gr 55 per ASTM A1011 or ASTM A1008
   - Other steels may be used if they meet the following:
     - 55,000 PSI minimum yield strength
     - 70,000 PSI minimum tensile strength
     - 18% minimum elongation in 2"
   - Wall thickness (uncoated) shall be within the range of .083" to .099"
   - Outside diameter (uncoated) shall be within the range of 2.369" to 2.381"
   - Galvanization per ASTM 123 or ASTM A653 G210. For precoated steel tubing (ASTM A653), recoat tube outside diameter weld seam by metallizing with zinc wire per ASTM B833.
5. Sign blanks shall be the sizes and shapes shown on the plans.
6. Additional sign clamp required on the "T-bracket" post for 24" high signs. Place clamp at least 3" above bottom of sign when possible.
7. Sign supports shall not be spliced except where shown. Sign support posts shall not be spliced.
8. See the Traffic Operations Division website for detailed drawings of sign clamps and Wedge Anchor System components. The website address is: http://www.txdot.gov/publications/traffic.htm

WEDGE ANCHOR SYSTEM INSTALLATION PROCEDURE

1. Dig foundation hole. Where solid rock is encountered at ground level, the foundation shall be a minimum depth of 18". When solid rock is encountered below ground level, the foundation shall extend in the solid rock a minimum depth of 18" or provide a minimum foundation depth of 30". If solid rock is encountered, the socket/stub may be reduced in length as required to a minimum length of 18". Any material removed from the socket/stub shall be from the bottom and the clearance requirements given on SMD(GEN) must be followed. The inner surfaces of the socket/stub must remain free of concrete or other debris.
2. The Engineer may permit batches of concrete less than 2 cubic yards to be mixed with a portable, motor driven concrete mixer. For small placements less than 0.5 cubic yards, hand mixing in a suitable container may be allowed by Engineer. Place concrete into hole until it is approximately flush with the ground. Concrete shall be Class A.
3. Insert tubular socket into concrete until top of socket is approximately 1/4 " above the concrete footing.
4. Plumb the socket. Allow a minimum 4 days for concrete to set, unless otherwise directed by Engineer..
5. Attach the sign to the sign post.
6. Insert the sign post into socket and align sign face with roadway.
7. Drive the wedge into the socket to secure post. This will leave approximately 3 inches of the wedge exposed.

UNIVERSAL ANCHOR SYSTEM INSTALLATION PROCEDURE

1. Dig foundation hole. Where solid rock is encountered at ground level, the foundation shall be a minimum depth of 18". When solid rock is encountered below ground level, the foundation shall extend in the solid rock a minimum depth of 18" or provide a minimum foundation depth of 30". If solid rock is encountered, the socket/stub may be reduced in length as required to a minimum length of 18". Any material removed from the socket/stub shall be from the bottom and the clearance requirements given on SMD(GEN) must be followed. The inner surfaces of the socket/stub must remain free of concrete or other debris.
2. Insert base post in hole to depths shown and backfill hole with concrete.
3. Level and plumb the base post using a torpedo level and allow concrete adequate time to set. The bottom of the slots provided in the stub pipe shall remain above the top of the concrete foundation.
4. Attach the sign to the sign post.
5. Install plastic insert around bottom of post.
6. Insert sign post into base post. Lower until the post comes to rest on steel rod.
7. Seat compression ring using a hammer. Typically, the top of compression ring will be approximately level with top of stub post when optimally installed.
8. Check sign post by hand to ensure it is unable to turn. If loose, increase the tightening of the compression ring.

Texas Department of Transportation
Traffic Operations Division

SIGN MOUNTING DETAILS SMALL ROADSIDE SIGNS WEDGE & UNIVERSAL ANCHOR WITH THIN WALL TUBING POST

SMD(TWT)-08

©TxDOT July 2002

DN: TXDOT	CK: TXDOT	DW: TXDOT	CK: TXDOT
9-08 REVISIONS			

CONT	SECT	JOB	HIGHWAY
0101	06	095	
DIST		COUNTY	SHEET NO.
CRP		NUECES	131

DATE:
FILE:

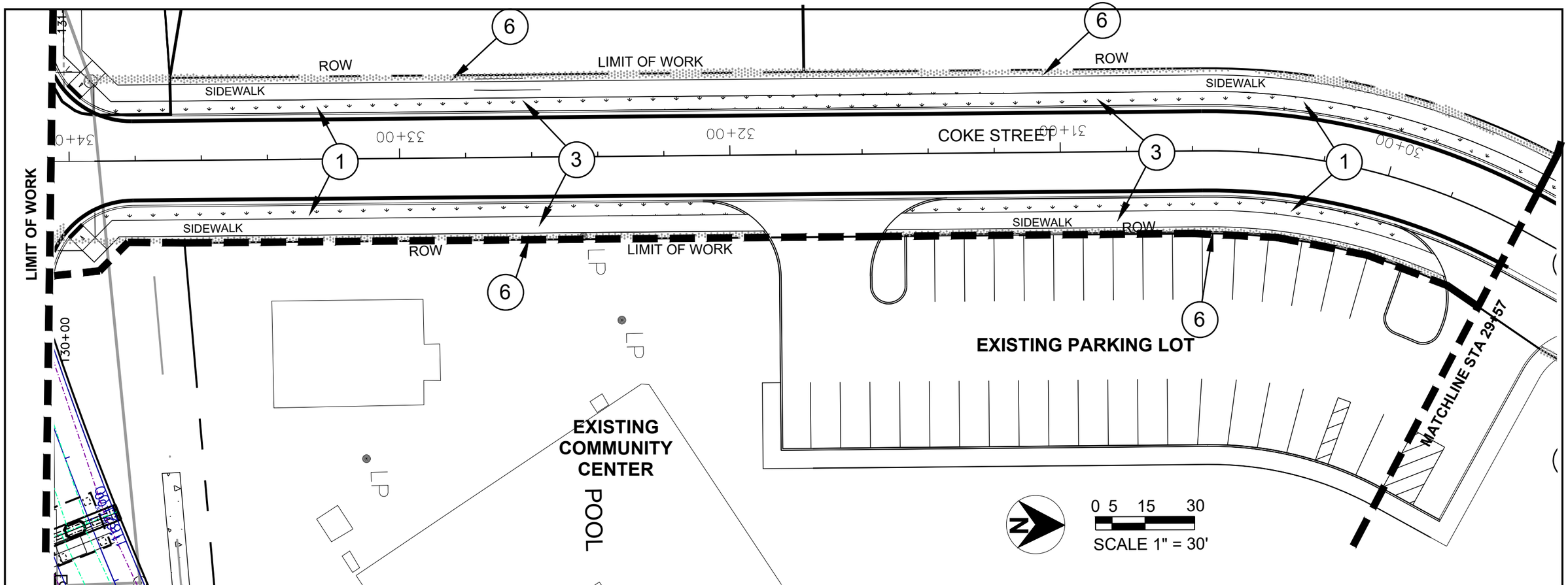

DETAIL NOTES:

1. TYPE A SEEDING - PERMANENT DRILL SEEDING BETWEEN CURB AND SIDEWALK SEE FERTILIZER SEED STRAWS AND WATER, SHEET 1 OF 1
2. NOT USED
3. SIDEWALK, **SEE CIVIL ENGINEERING DRAWINGS**
4. SHARED USE PATH SIGNAGE, **SEE CONSTRUCTION DETAILS SHEET 3 OF 10 (PAY ITEM 0636-6001, ALUMINUM SIGN (TYPE A))**
5. SHARED USE PATH, **SEE CIVIL ENGINEERING DRAWINGS**
6. PERMANENT DRILL SEEDING - TYPE A BETWEEN SIDEWALK & ROW, **SEE FERTILIZER, SEED, SOD, STRAW AND WATER, SHEET 1 OF 1**
7. BIKEWAY PAVEMENT MARKING, ARROW AND SYMBOLS, **SEE CONSTRUCTION DETAILS SHEET 3 OF 3**
8. MUTCD BIKEWAY CROSSING SIGN (MUTCD 11- 15/15P), **SEE CONSTRUCTION DETAILS SHEET 3 OF 10 (PAY ITEM 0636-6002, ALUMINUM SIGN (TYPE 6)**
9. CONTINENTAL THERMAL CROSSWALK, **SEE DRAWINGS (PAY ITEM 0666-60180 AND 0678-6006)**
10. 4" HARDWOOD BARK MULCH COVER

DRAWING LEGEND:

TYPE A SEEDING - Permanent Drill Seeding (0164-6066) with Straw or Hay Mulch Cover (0162-6033)

SHEET QUANTITIES - PLANTING

ITEM	DESCRIPTION	UNIT	QNTY.
0161-6012	GENERAL USE COMPOST	SY	14
0192-6012	MULCH	SY	0
0164-6066	DRILL SEEDING (PERM)	SY	516
0164-6057	CELL FBR MLCH SEED (PERM)	SY	0
0166-6001	FERTILIZER	AC	0.3
0162-6003	STRAW OR HAY MULCH	SY	516
0192-6063	PLANT BED PREP (TYPE I)	SY	0
0192-6026	PLANT MATERIAL (65 GALLON)(TREE)	EA	0
0192-6065	PLANT BED PREP (TYPE III)	SY	0
0192-6066	PLANT BED PREP (TYPE IV)	SY	516
1006-6002	LANDSCAPE SOIL AMENDMENT (TYPE II)	SY	516
1006-6001	LANDSCAPE SOIL AMENDMENT (TYPE I)	SY	0
0636-6001	ALUMINUM SIGN (TYPE A)	EA	0
0636-6002	ALUMINUM SIGN (TYPE G)	EA	0
0668-6096	PREFAB PAV MRK TY C (W) (BIKE SYMBOL)	EA	0
0678-6028	PV SURF PREPFOR MRK (BIKE SYMBOL)	EA	0
0668-6094	PREFAB PAV MRK TY C (W) (BIKE ARROW)	EA	0
0678-6026	PV SURF PREPFOR MRK (BIKE ARROW)	EA	0
0666-6180	FLL PAV MARK TY II (W) (12")	LF	0
0678-6006	PAV SUR PREP FOR MARK (12")	LF	0
0529-6033	CONCRETE CURB (LANDSCAPE)	LF	0
0168-6001	VEGETATIVE WATERING	MG	12.8

STATE OF TEXAS
MICHAEL P. MAUER
1510
REGISTERED LANDSCAPE ARCHITECT
MAR 13, 2023

FLATIRON/DRAGADOS LLC

M2L Associates Inc.
Houston, Texas 77024
T: 713-722-8897 F: 713-722-8048
•Landscape Architecture•
•Land Planning•Urban Design•

Texas Department of Transportation ©2016

US 181 HARBOR BRIDGE

COKE STREET PLANTING PLAN

STA 34+05 TO STA 29+57

SHEET 1 OF 4

DESIGN	FED.RD. DIV.NO.	FEDERAL AID PROJECT NO.		HIGHWAY NO.
GRAPHICS	X	(See Title Sheet)		
	STATE	DISTRICT	COUNTY	SHEET NO.
CHECK	TEXAS	CRP	NUECES	F101
CHECK	CONTROL	SECTION	JOB	
	0101	06	095	132

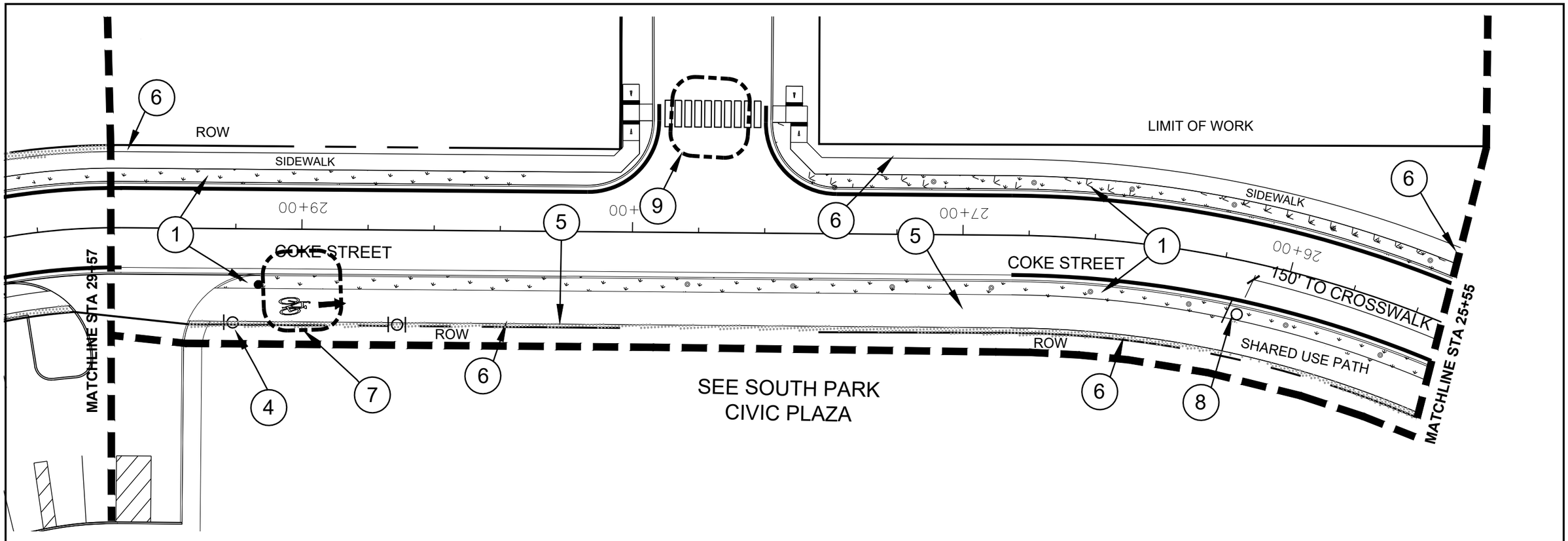

DETAIL NOTES:

1. TYPE A SEEDING - PERMANENT DRILL SEEDING BETWEEN CURB AND SIDEWALK, SEE FERTILIZER SEED STRAWS AND WATER, SHEET 1 OF 1
2. NOT USED
3. SIDEWALK, **SEE CIVIL ENGINEERING DRAWINGS**
4. SHARED USE PATH SIGNAGE, **SEE CONSTRUCTION DETAILS SHEET 3 OF 10 (PAY ITEM 0636-6001, ALUMINUM SIGN (TYPE A))**
5. SHARED USE PATH, **SEE CIVIL ENGINEERING DRAWINGS**
6. PERMANENT DRILL SEEDING - TYPE A BETWEEN SIDEWALK & ROW, **SEE FERTILIZER, SEED, SOD, STRAW AND WATER, SHEET 1 OF 1**
7. BIKEWAY PAVEMENT MARKING, ARROW AND SYMBOLS, **SEE CONSTRUCTION DETAILS SHEET 3 OF 3**
8. MUTCD BIKEWAY CROSSING SIGN (MUTCD 11- 15/15P), **SEE CONSTRUCTION DETAILS SHEET 3 OF 10 (PAY ITEM 0636-6002, ALUMINUM SIGN (TYPE 6)**
9. CONTINENTAL THERMAL CROSSWALK, **SEE DRAWINGS (PAY ITEM 0666-60180 AND 0678-6006)**
10. 4" HARDWOOD BARK MULCH COVER

DRAWING LEGEND:

TYPE A SEEDING - Permanent Drill Seeding (0164-6066) with Straw or Hay Mulch Cover (0162-6033)

SHEET QUANTITIES - PLANTING

ITEM	DESCRIPTION	UNIT	QNTY.
0161-6012	GENERAL USE COMPOST	SY	0
0192-6012	MULCH	SY	0
0164-6066	DRILL SEEDING (PERM)	SY	835
0164-6057	CELL FBR MLCH SEED (PERM)	SY	0
0166-6001	FERTILIZER	AC	0.6
0162-6003	STRAW OR HAY MULCH	SY	835
0192-6063	PLANT BED PREP (TYPE I)	SY	0
0192-6026	PLANT MATERIAL (65 GALLON)(TREE)	EA	0
0192-6065	PLANT BED PREP (TYPE III)	SY	0
0192-6066	PLANT BED PREP (TYPE IV)	SY	835
1006-6002	LANDSCAPE SOIL AMENDMENT (TYPE II)	SY	835
1006-6001	LANDSCAPE SOIL AMENDMENT (TYPE I)	SY	0
0636-6001	ALUMINUM SIGN (TYPE A)	EA	1
0636-6002	ALUMINUM SIGN (TYPE G)	EA	1
0668-6096	PREFAB PAV MRK TY C (W) (BIKE SYMBOL)	EA	1
0678-6028	PV SURF PREPFOR MRK (BIKE SYMBOL)	EA	1
0668-6094	PREFAB PAV MRK TY C (W) (BIKE ARROW)	EA	1
0678-6026	PV SURF PREPFOR MRK (BIKE ARROW)	EA	1
0666-6180	FLL PAV MARK TY II (W) (12")	LF	30
0678-6006	PAV SUR PREP FOR MARK (12")	LF	30
0529-6033	CONCRETE CURB (LANDSCAPE)	LF	0
0168-6001	VEGETATIVE WATERING	MG	20.7

0 5 15 30
SCALE 1" = 30'

STATE OF TEXAS
MICHAEL P. MAUER
1510
REGISTERED
LANDSCAPE ARCHITECT
MAR 13, 2023

FLATIRON/DRAGADOS LLC

M2L Associates Inc.
Houston, Texas 77024
T: 713-722-8897 F: 713-722-8048
•Landscape Architecture•
•Land Planning• Urban Design•

Texas Department of Transportation ® 2016

US 181 HARBOR BRIDGE

COKE STREET PLANTING PLAN

STA 29+57 TO STA 25+55

SHEET 2 OF 4

DESIGN	FED.RD. DIV.NO.	FEDERAL AID PROJECT NO.		HIGHWAY NO.
GRAPHICS	X	(See Title Sheet)		
	STATE	DISTRICT	COUNTY	SHEET NO.
CHECK	TEXAS	CRP	NUECES	F102
CHECK	CONTROL	SECTION	JOB	
	0101	06	095	133

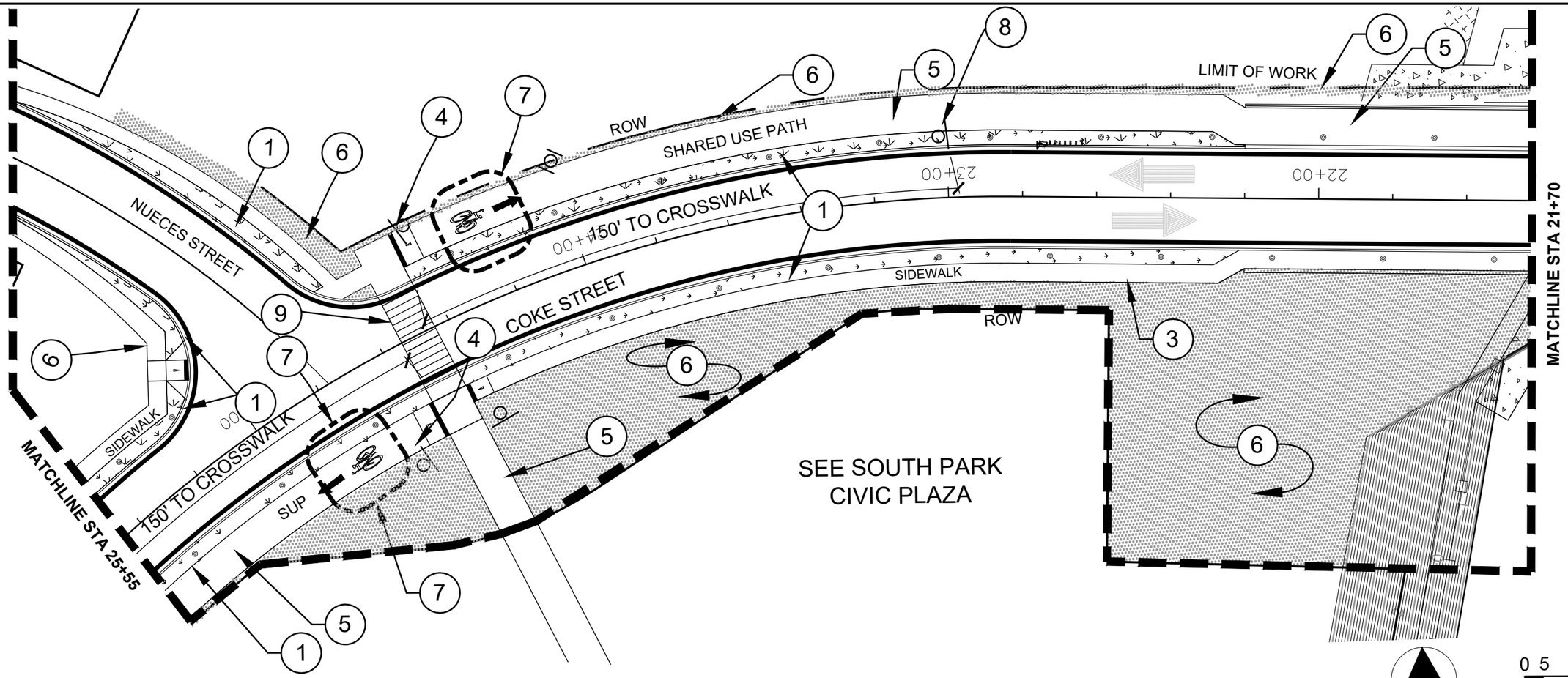

DETAIL NOTES:

1. TYPE A SEEDING - PERMANENT DRILL SEEDING BETWEEN CURB AND SIDEWALK, SEE FERTILIZER SEED STRAWS AND WATER, SHEET 1 OF 1
2. NOT USED
3. SIDEWALK, **SEE CIVIL ENGINEERING DRAWINGS**
4. SHARED USE PATH SIGNAGE, **SEE CONSTRUCTION DETAILS SHEET 3 OF 10 (PAY ITEM 0636-6001, ALUMINUM SIGN (TYPE A))**
5. SHARED USE PATH, **SEE CIVIL ENGINEERING DRAWINGS**
6. PERMANENT DRILL SEEDING - TYPE A BETWEEN SIDEWALK & ROW, **SEE FERTILIZER, SEED, SOD, STRAW AND WATER, SHEET 1 OF 1**
7. BIKEWAY PAVEMENT MARKING, ARROW AND SYMBOLS, **SEE CONSTRUCTION DETAILS SHEET 3 OF 3**
8. MUTCD BIKEWAY CROSSING SIGN (MUTCD 11- 15/15P), **SEE CONSTRUCTION DETAILS SHEET 3 OF 10 (PAY ITEM 0636-6002, ALUMINUM SIGN (TYPE 6)**
9. CONTINENTAL THERMAL CROSSWALK, **SEE DRAWINGS (PAY ITEM 0666-60180 AND 0678-6006)**
10. 4" HARDWOOD BARK MULCH COVER

DRAWING LEGEND:

TYPE A SEEDING - Permanent Drill Seeding (0164-6066) with Straw or Hay Mulch Cover (0162-6033)

SHEET QUANTITIES - PLANTING

ITEM	DESCRIPTION	UNIT	QNTY.
0161-6012	GENERAL USE COMPOST	SY	57
0192-6012	MULCH	SY	0
0164-6066	DRILL SEEDING (PERM)	SY	2050
0164-6057	CELL FBR MLCH SEED (PERM)	SY	0
0166-6001	FERTILIZER	AC	2.3
0162-6003	STRAW OR HAY MULCH	SY	2050
0192-6063	PLANT BED PREP (TYPE I)	SY	0
0192-6026	PLANT MATERIAL (65 GALLON)(TREE)	EA	0
0192-6065	PLANT BED PREP (TYPE III)	SY	0
0192-6066	PLANT BED PREP (TYPE IV)	SY	2050
1006-6002	LANDSCAPE SOIL AMENDMENT (TYPE II)	SY	2050
1006-6001	LANDSCAPE SOIL AMENDMENT (TYPE I)	SY	0
0636-6001	ALUMINUM SIGN (TYPE A)	EA	2
0636-6002	ALUMINUM SIGN (TYPE G)	EA	1
0668-6096	PREFAB PAV MRK TY C (W) (BIKE SYMBOL)	EA	2
0678-6028	PV SURF PREPFOR MRK (BIKE SYMBOL)	EA	2
0668-6094	PREFAB PAV MRK TY C (W) (BIKE ARROW)	EA	2
0678-6026	PV SURF PREPFOR MRK (BIKE ARROW)	EA	2
0666-6180	FLL PAV MARK TY II (W) (12")	LF	90
0678-6006	PAV SUR PREP FOR MARK (12")	LF	90
0529-6033	CONCRETE CURB (LANDSCAPE)	LF	0
0168-6001	VEGETATIVE WATERING	MG	50.8

STATE OF TEXAS
MICHAEL P. MAUER
1510
REGISTERED
LANDSCAPE ARCHITECT
MAR 13, 2023

FLATIRON/DRAGADOS LLC

M2L Associates Inc.
Houston, Texas 77024
T: 713-722-8897 F: 713-722-8048
•Landscape Architecture•
•Land Planning• Urban Design•

Texas Department of Transportation ©2016

US 181 HARBOR BRIDGE

COKE STREET PLANTING PLAN

STA 25+55 TO 21+70

SHEET 3 OF 4

DESIGN	FED.RD. DIV.NO.	FEDERAL AID PROJECT NO.		HIGHWAY NO.
GRAPHICS	X	(See Title Sheet)		
	STATE	DISTRICT	COUNTY	SHEET NO.
CHECK	TEXAS	CRP	NUECES	F103
CHECK	CONTROL	SECTION	JOB	
	0101	06	095	134

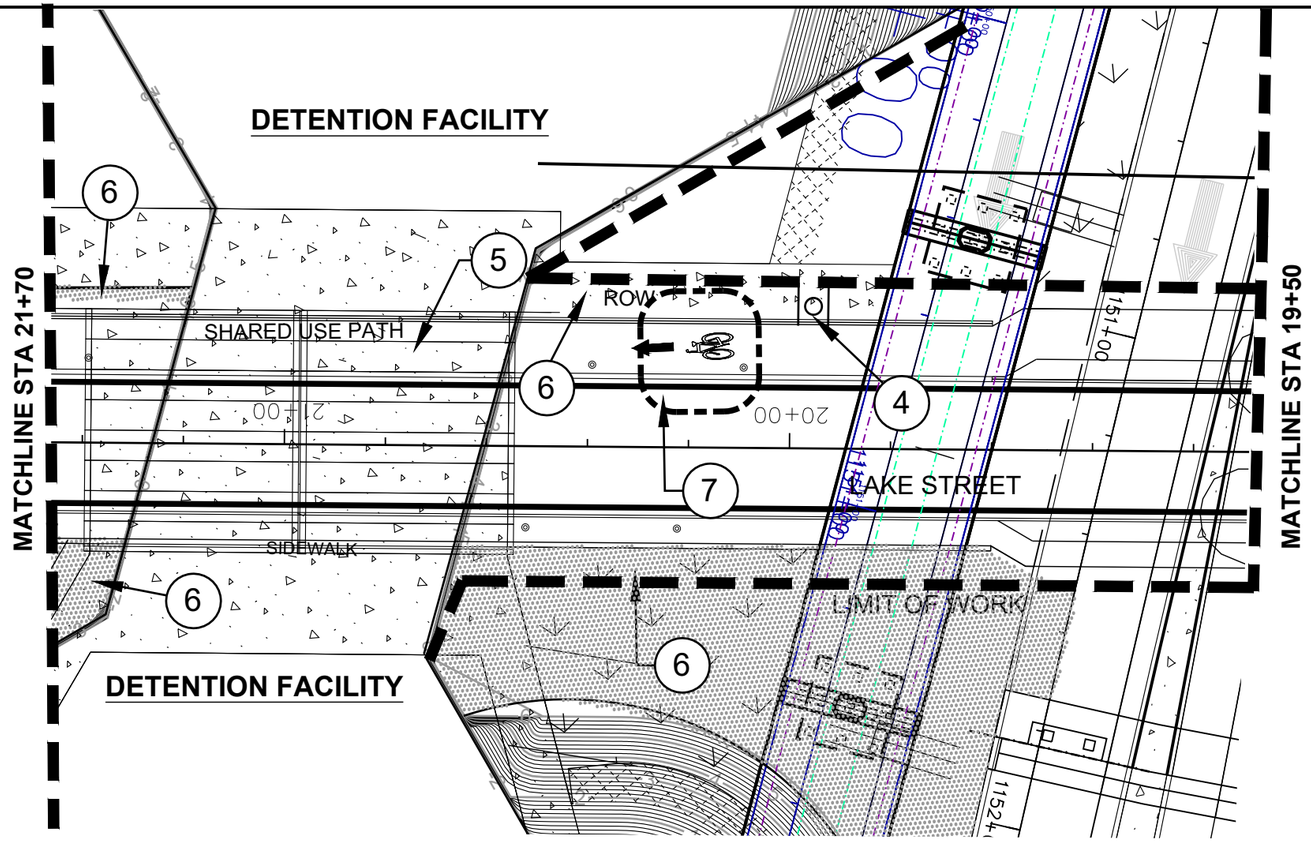

N

0 5 15 30
SCALE 1" = 30'

DETAIL NOTES:

1. TYPE A SEEDING - PERMANENT DRILL SEEDING BETWEEN CURB AND SIDEWALK, SEE FERTILIZER SEED STRAWS AND WATER, SHEET 1 OF 1
2. NOT USED
3. SIDEWALK, **SEE CIVIL ENGINEERING DRAWINGS**
4. SHARED USE PATH SIGNAGE, **SEE CONSTRUCTION DETAILS SHEET 3 OF 10 (PAY ITEM 0636-6001, ALUMINUM SIGN (TYPE A))**
5. SHARED USE PATH, **SEE CIVIL ENGINEERING DRAWINGS**
6. PERMANENT DRILL SEEDING - TYPE A BETWEEN SIDEWALK & ROW, **SEE FERTILIZER, SEED, SOD, STRAW AND WATER, SHEET 1 OF 1**
7. BIKEWAY PAVEMENT MARKING, ARROW AND SYMBOLS, **SEE CONSTRUCTION DETAILS SHEET 3 OF 3**
8. MUTCD BIKEWAY CROSSING SIGN (MUTCD 11- 15/15P), **SEE CONSTRUCTION DETAILS SHEET 3 OF 10 (PAY ITEM 0636-6002, ALUMINUM SIGN (TYPE 6)**
9. CONTINENTAL THERMAL CROSSWALK, **SEE DRAWINGS (PAY ITEM 0666-60180 AND 0678-6006)**
10. 4" HARDWOOD BARK MULCH COVER

DRAWING LEGEND:

TYPE A SEEDING - Permanent Drill Seeding (0164-6066) with Straw or Hay Mulch Cover (0162-6033)

SHEET QUANTITIES - PLANTING

ITEM	DESCRIPTION	UNIT	QNTY.
0161-6012	GENERAL USE COMPOST	SY	12
0192-6012	MULCH	SY	0
0164-6066	DRILL SEEDING (PERM)	SY	440
0164-6057	CELL FBR MLCH SEED (PERM)	SY	0
0166-6001	FERTILIZER	AC	0.3
0162-6003	STRAW OR HAY MULCH	SY	440
0192-6063	PLANT BED PREP (TYPE I)	SY	0
0192-6026	PLANT MATERIAL (65 GALLON)(TREE)	EA	0
0192-6065	PLANT BED PREP (TYPE III)	SY	0
0192-6066	PLANT BED PREP (TYPE IV)	SY	440
1006-6002	LANDSCAPE SOIL AMENDMENT (TYPE II)	SY	440
1006-6001	LANDSCAPE SOIL AMENDMENT (TYPE I)	SY	0
0636-6001	ALUMINUM SIGN (TYPE A)	EA	1
0636-6002	ALUMINUM SIGN (TYPE G)	EA	0
0668-6096	PREFAB PAV MRK TY C (W) (BIKE SYMBOL)	EA	1
0678-6028	PV SURF PREPFOR MRK (BIKE SYMBOL)	EA	1
0668-6094	PREFAB PAV MRK TY C (W) (BIKE ARROW)	EA	1
0678-6026	PV SURF PREPFOR MRK (BIKE ARROW)	EA	1
0666-6180	FLL PAV MARK TY II (W) (12")	LF	0
0678-6006	PAV SUR PREP FOR MARK (12")	LF	0
0529-6033	CONCRETE CURB (LANDSCAPE)	LF	0
0168-6001	VEGETATIVE WATERING	MG	10.9

STATE OF TEXAS
MICHAEL P. MAUER
1510
REGISTERED
LANDSCAPE ARCHITECT
MAR 13, 2023

FLATIRON/DRAGADOS LLC

M2L Associates Inc.
Houston, Texas 77024
T: 713-722-8897 F: 713-722-8048
•Landscape Architecture•
•Land Planning• Urban Design•

Texas Department of Transportation ©2016

US 181 HARBOR BRIDGE

COKE STREET PLANTING PLAN

STA 21+70 TO STA 19+50

SHEET 4 OF 4

DESIGN	FED.RD. DIV.NO.	FEDERAL AID PROJECT NO.		HIGHWAY NO.
GRAPHICS	X	(See Title Sheet)		
	STATE	DISTRICT	COUNTY	SHEET NO.
CHECK	TEXAS	CRP	NUECES	F104
CHECK	CONTROL	SECTION	JOB	
	0101	06	095	135

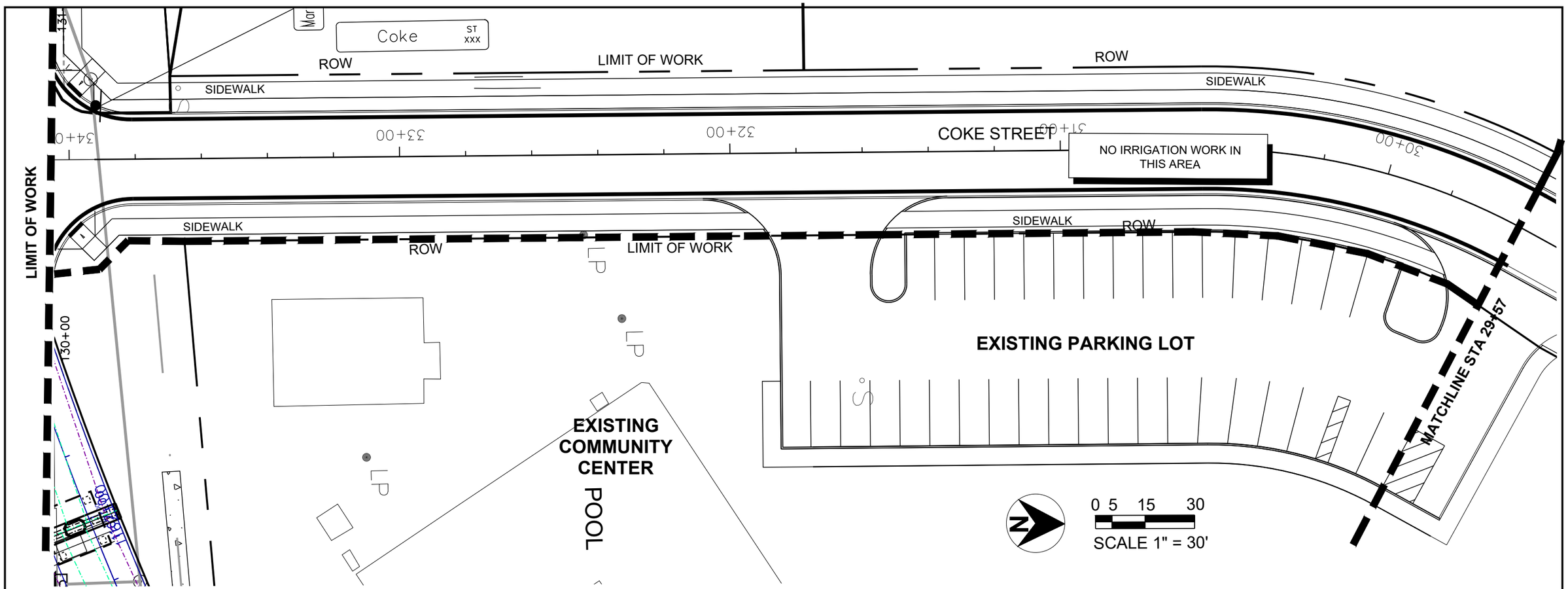

IRRIGATION CONNECTION DIAGRAM

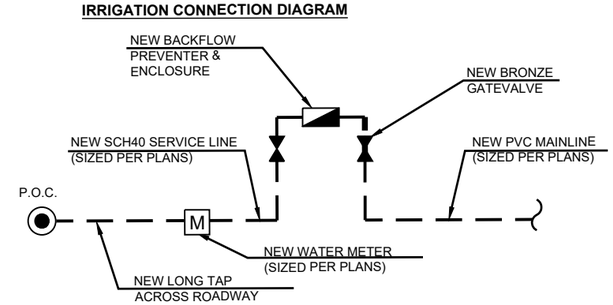

GENERAL NOTES:

1. SEE LANDSCAPE GENERAL NOTES SHEET 1 OF 1 FOR ADDITIONAL INFORMATION
2. SEE IRRIGATION DETAILS SHEETS
3. IRRIGATION SYSTEM PAID FOR UNDER 0170-6002
4. SHRUB DRIP IRRIGATION ZONE -TYPICAL
5. TREE DRIP SYSTEM -TYPICAL

IRRIGATION LEGEND

- CLASS 315 LATERAL
- SCH-40 PVC MAINLINE
- 1 6" SCH-40 PVC SLEEVE/BORE
- 2 4" SCH-40 PVC SLEEVE/BORE
- TREE DRIP SYSTEM
- SHRUB GROUND COVER DRIP SYSTEM
- HUNTER ICV SERIES VALVE(SIZE AS NOTED)
- GATE VALVE
- POINT OF CONNECTION, ***SEE DIAGRAM, THIS SHEET***
- C XC HYBRID CONTROLLER
- MS RAIN MOISTURE SENSOR
- A2 1.0" 15.0 GPM — CONTROLLER NUMBER; ZONE NUMBER; ZONE GALLONAGE PER MINUTE - ACTUAL; VALVE SIZE (INCHES)

STATE OF TEXAS
MICHAEL P. MAUER
1510
REGISTERED LANDSCAPE ARCHITECT
MAR 13, 2023

FLATIRON/DRAGADOS LLC

M2L Associates Inc.
Houston, Texas 77024
T: 713-722-8897 F: 713-722-8048
•Landscape Architecture•
•Land Planning•Urban Design•

Texas Department of Transportation ©2016

US 181 HARBOR BRIDGE

COKE STREET IRRIGATION PLAN

STA 34+05 TO STA 29+57

SHEET 1 OF 4

DESIGN	FED.RD. DIV.NO.	FEDERAL AID PROJECT NO.		HIGHWAY NO.
	X	(See Title Sheet)		
GRAPHICS	STATE	DISTRICT	COUNTY	SHEET NO.
CHECK	TEXAS	CRP	NUECES	F105
CHECK	CONTROL	SECTION	JOB	
	0101	06	095	136

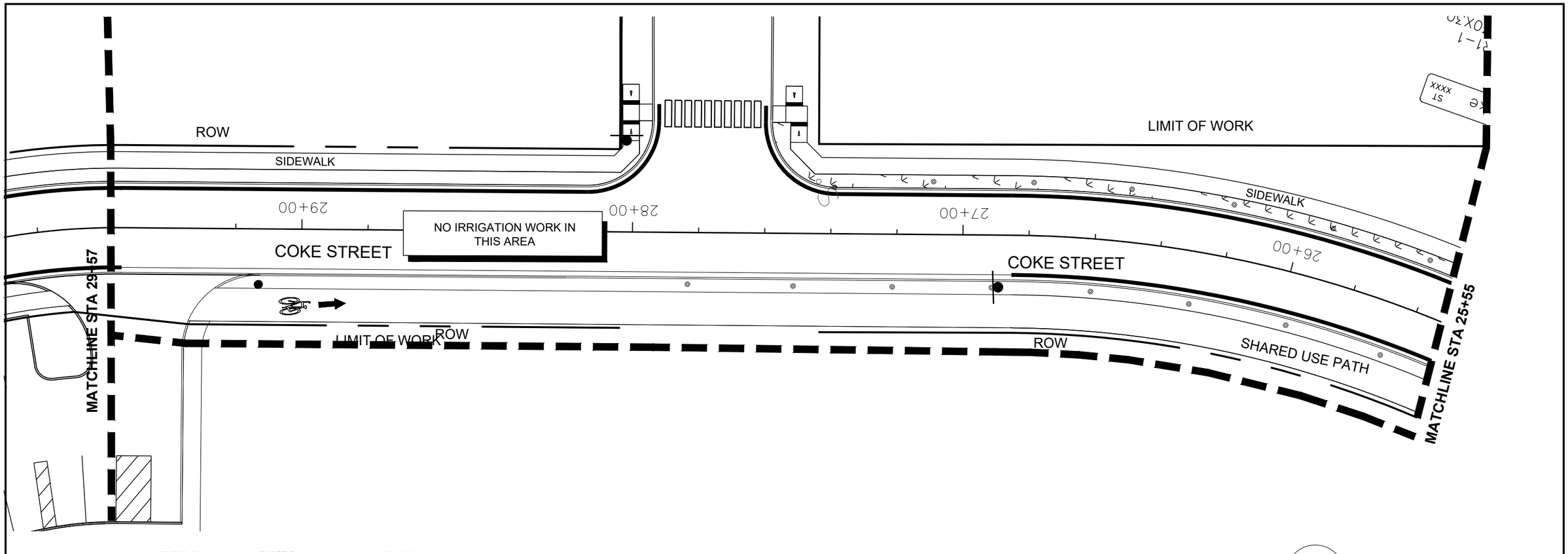

IRRIGATION CONNECTION DIAGRAM

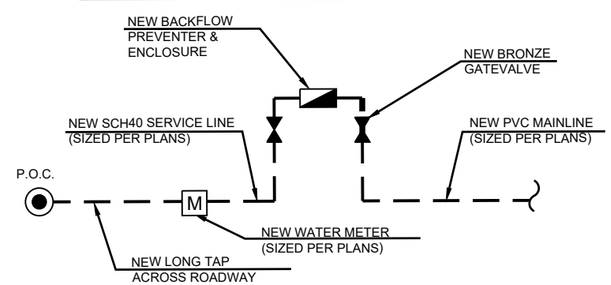

GENERAL NOTES:

1. SEE LANDSCAPE GENERAL NOTES SHEET 1 OF 1 FOR ADDITIONAL INFORMATION
2. SEE IRRIGATION DETAILS SHEETS
3. IRRIGATION SYSTEM PAID FOR UNDER 0170-6002
4. SHRUB DRIP IRRIGATION ZONE -TYPICAL
5. TREE DRIP SYSTEM -TYPICAL

IRRIGATION LEGEND

- CLASS 315 LATERAL
- SCH-40 PVC MAINLINE
- 1 — 6" SCH-40 PVC SLEEVE/BORE
- 2 — 4" SCH-40 PVC SLEEVE/BORE
- TREE DRIP SYSTEM
- SHRUB GROUND COVER DRIP SYSTEM
- HUNTER ICV SERIES VALVE(SIZE AS NOTED)
- GATE VALVE
- POINT OF CONNECTION, ***SEE DIAGRAM, THIS SHEET***
- C — XC HYBRID CONTROLLER
- MS — RAIN MOISTURE SENSOR

A2 / 1.0" — 15.0 GPM
- CONTROLLER NUMBER
- ZONE NUMBER
- ZONE GALLONAGE PER MINUTE - ACTUAL
- VALVE SIZE (INCHES)

STATE OF TEXAS
MICHAEL P. MAUER
1510
REGISTERED
LANDSCAPE ARCHITECT
MAR 13, 2023

FLATIRON/DRAGADOS LLC

M2L Associates Inc.
Houston, Texas 77024
T: 713-722-8897 F: 713-722-8048
•Landscape Architecture•
•Land Planning•Urban Design•

Texas Department of Transportation ®2016

US 181 HARBOR BRIDGE

COKE STREET IRRIGATION PLAN

STA 29+57 TO STA 25+55

SHEET 2 OF 4

DESIGN	FED.RD. DIV.NO.	FEDERAL AID PROJECT NO.		HIGHWAY NO.
GRAPHICS	X	(See Title Sheet)		
	STATE	DISTRICT	COUNTY	SHEET NO.
CHECK	TEXAS	CRP	NUECES	F106
CHECK	CONTROL	SECTION	JOB	
	0101	06	095	137

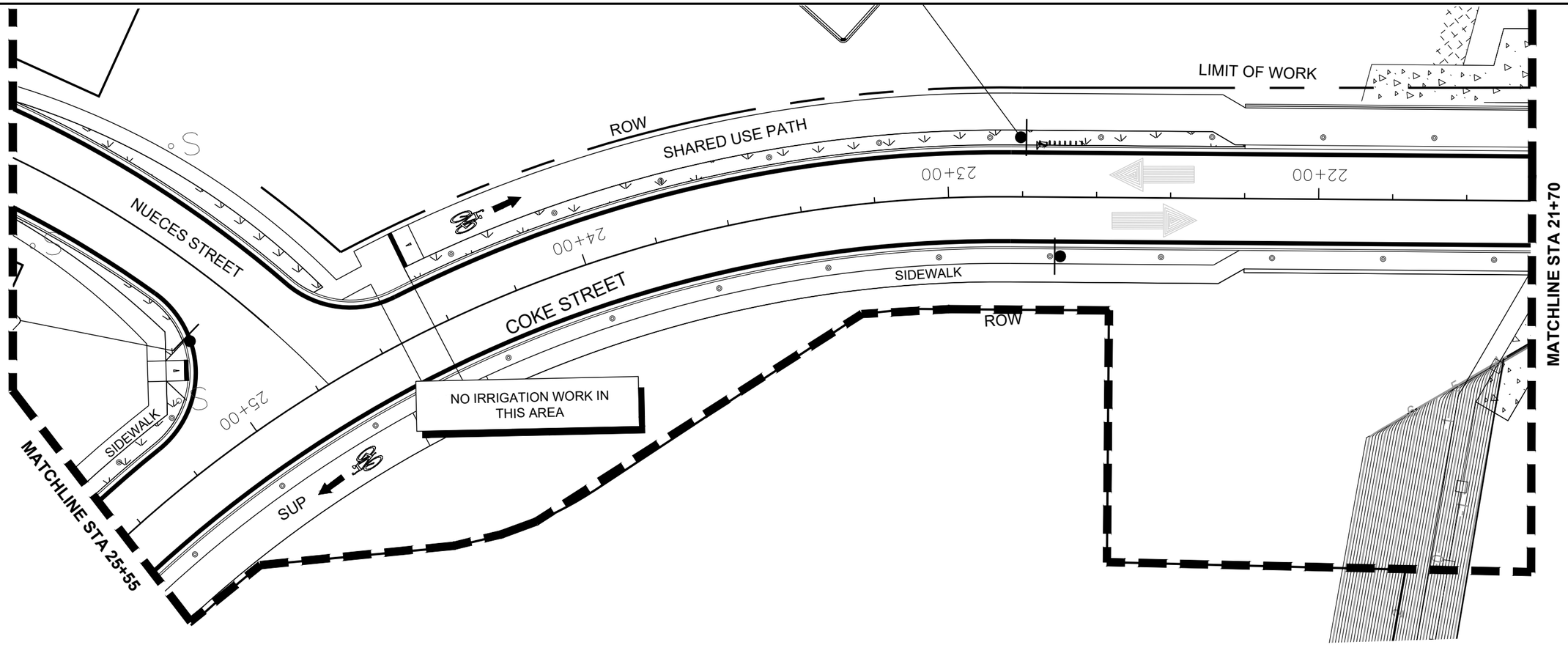

IRRIGATION CONNECTION DIAGRAM

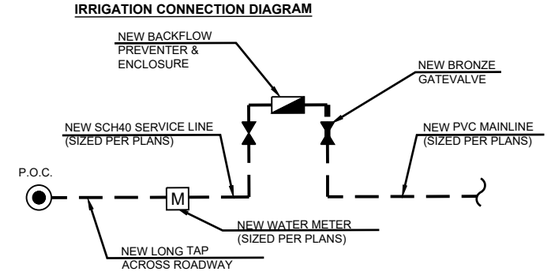

GENERAL NOTES:

1. SEE LANDSCAPE GENERAL NOTES SHEET 1 OF 1 FOR ADDITIONAL INFORMATION
2. SEE IRRIGATION DETAILS SHEETS
3. IRRIGATION SYSTEM PAID FOR UNDER 0170-6002
4. SHRUB DRIP IRRIGATION ZONE -TYPICAL
5. TREE DRIP SYSTEM -TYPICAL

IRRIGATION LEGEND

- CLASS 315 LATERAL
- SCH-40 PVC MAINLINE
- 1 6" SCH-40 PVC SLEEVE/BORE
- 2 4" SCH-40 PVC SLEEVE/BORE
- TREE DRIP SYSTEM
- SHRUB GROUND COVER DRIP SYSTEM
- HUNTER ICV SERIES VALVE(SIZE AS NOTED)
- GATE VALVE
- POINT OF CONNECTION, ***SEE DIAGRAM, THIS SHEET***
- C XC HYBRID CONTROLLER
- MS RAIN MOISTURE SENSOR
- A2 / 1.0" / 15.0 GPM — CONTROLLER NUMBER; ZONE NUMBER; ZONE GALLONAGE PER MINUTE - ACTUAL; VALVE SIZE (INCHES)

STATE OF TEXAS
MICHAEL P. MAUER
1510
REGISTERED LANDSCAPE ARCHITECT
MAR 13, 2023

FLATIRON/DRAGADOS LLC

M2L Associates Inc.
Houston, Texas 77024
T: 713-722-8897 F: 713-722-8048
Landscape Architecture • Land Planning • Urban Design

Texas Department of Transportation ©2016

US 181 HARBOR BRIDGE

COKE STREET IRRIGATION PLAN

STA 25+55 TO 21+70

SHEET 3 OF 4

DESIGN	FED.RD. DIV.NO.	FEDERAL AID PROJECT NO.		HIGHWAY NO.
GRAPHICS	X	(See Title Sheet)		
	STATE	DISTRICT	COUNTY	SHEET NO.
CHECK	TEXAS	CRP	NUECES	F107
CHECK	CONTROL	SECTION	JOB	
	0101	06	095	138

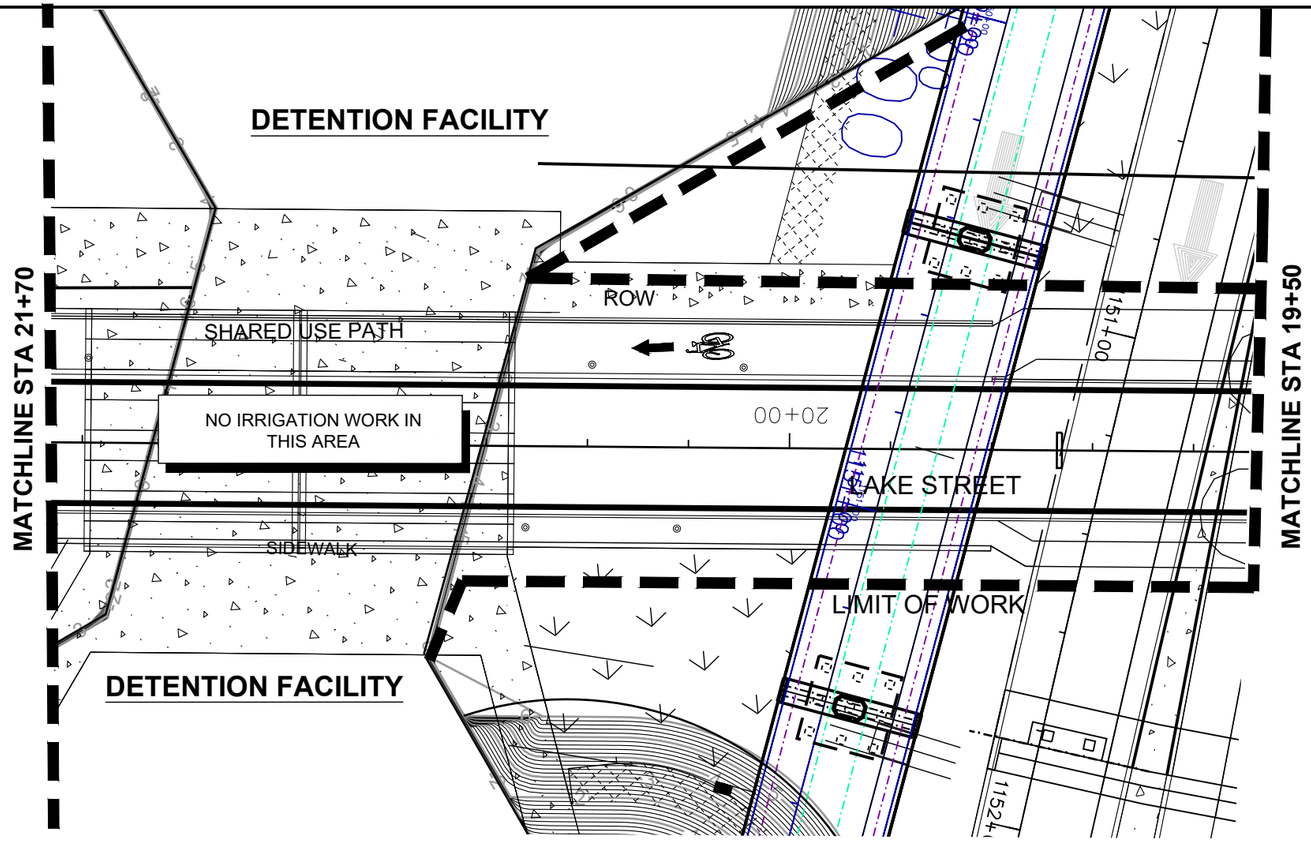

N

0 5 15 30
SCALE 1" = 30'

IRRIGATION CONNECTION DIAGRAM

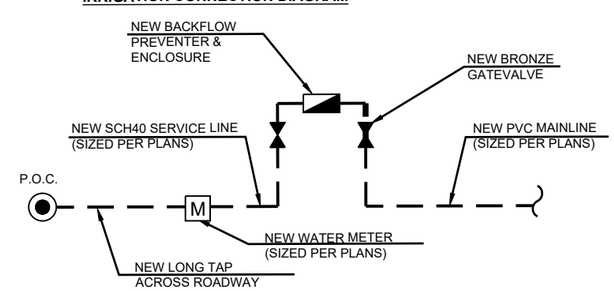

GENERAL NOTES:

1. SEE LANDSCAPE GENERAL NOTES SHEET 1 OF 1 FOR ADDITIONAL INFORMATION
2. SEE IRRIGATION DETAILS SHEETS
3. IRRIGATION SYSTEM PAID FOR UNDER 0170-6002
4. SHRUB DRIP IRRIGATION ZONE -TYPICAL
5. TREE DRIP SYSTEM -TYPICAL

IRRIGATION LEGEND

- CLASS 315 LATERAL
- SCH-40 PVC MAINLINE
- 1 6" SCH-40 PVC SLEEVE/BORE
- 2 4" SCH-40 PVC SLEEVE/BORE
- TREE DRIP SYSTEM
- SHRUB GROUND COVER DRIP SYSTEM
- HUNTER ICV SERIES VALVE(SIZE AS NOTED)
- GATE VALVE
- POINT OF CONNECTION, ***SEE DIAGRAM, THIS SHEET***
- C XC HYBRID CONTROLLER
- MS RAIN MOISTURE SENSOR

A2 15.0 GPM
1.0"

- CONTROLLER NUMBER
- ZONE NUMBER
- ZONE GALLONAGE PER MINUTE - ACTUAL
- VALVE SIZE (INCHES)

STATE OF TEXAS
MICHAEL P. MAUER
1510
REGISTERED LANDSCAPE ARCHITECT
MAR 13, 2023

FLATIRON/DRAGADOS LLC

M2L Associates Inc.
Houston, Texas 77024
T: 713-722-8897 F: 713-722-8048
•Landscape Architecture•
•Land Planning• Urban Design•

Texas Department of Transportation ©2016

US 181 HARBOR BRIDGE

COKE STREET IRRIGATION PLAN

STA 21+70 TO STA 19+50

SHEET 4 OF 4

DESIGN	FED.RD. DIV.NO.	FEDERAL AID PROJECT NO.		HIGHWAY NO.
GRAPHICS	X	(See Title Sheet)		
	STATE	DISTRICT	COUNTY	SHEET NO.
CHECK	TEXAS	CRP	NUECES	F108
CHECK	CONTROL	SECTION	JOB	
	0101	06	095	139

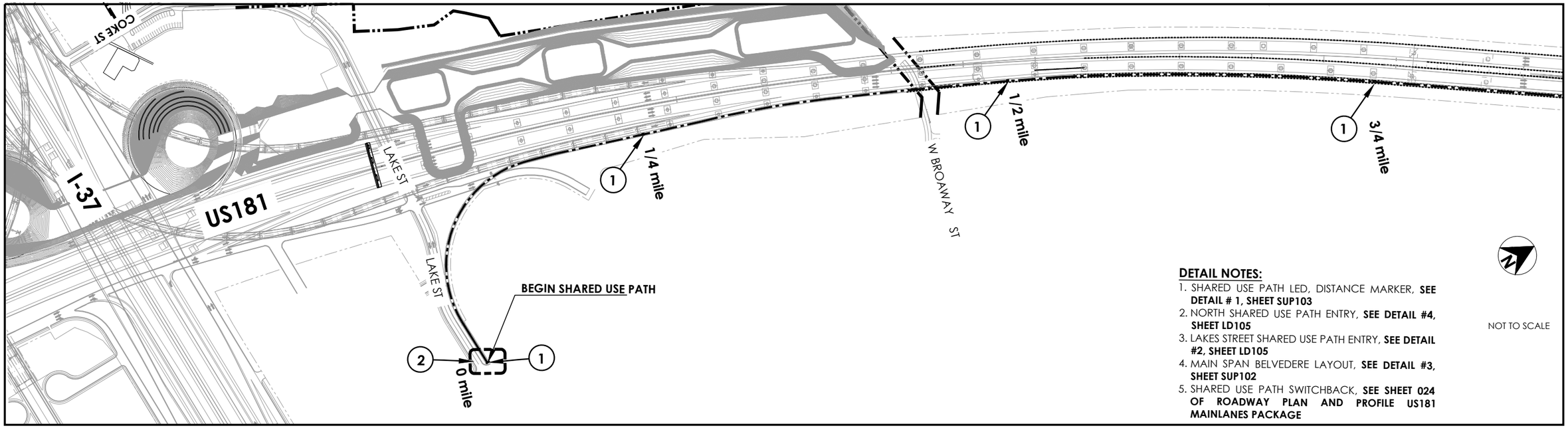

DETAIL NOTES:

1. SHARED USE PATH LED, DISTANCE MARKER, **SEE DETAIL # 1, SHEET SUP103**
2. NORTH SHARED USE PATH ENTRY, **SEE DETAIL #4, SHEET LD105**
3. LAKES STREET SHARED USE PATH ENTRY, **SEE DETAIL #2, SHEET LD105**
4. MAIN SPAN BELVEDERE LAYOUT, **SEE DETAIL #3, SHEET SUP102**
5. SHARED USE PATH SWITCHBACK, **SEE SHEET 024 OF ROADWAY PLAN AND PROFILE US181 MAINLANES PACKAGE**

NOT TO SCALE

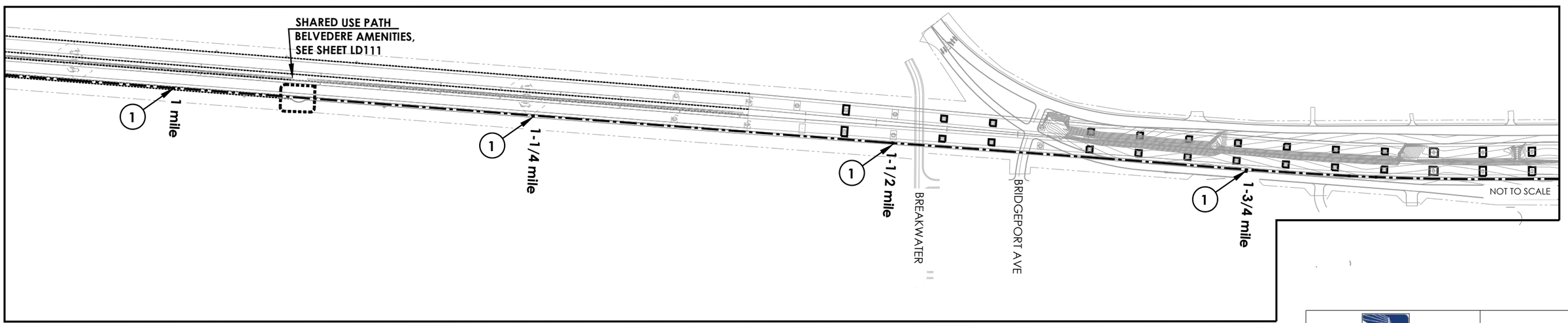

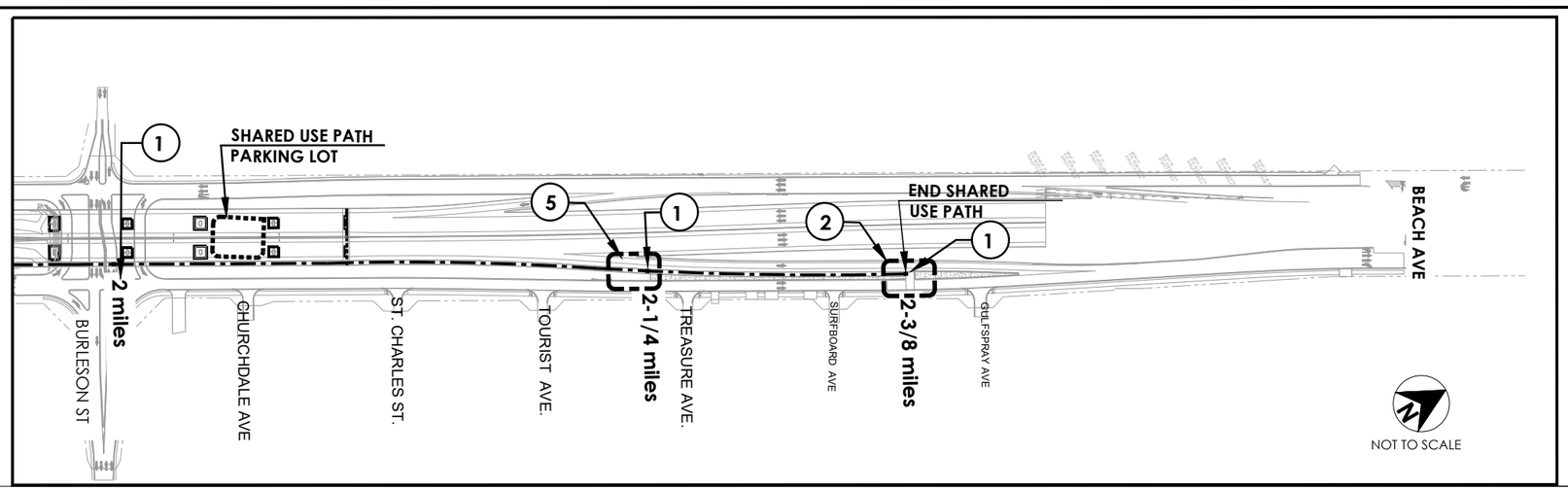

STATE OF TEXAS
MICHAEL P. MAUER
1510
REGISTERED
LANDSCAPE ARCHITECT
SEP 9, 2022

FLATIRON/DRAGADOS LLC

M2L Associates Inc.
Houston, Texas 77024
T: 713-722-8897 F: 713-722-8048
Landscape Architecture
Land Planning Urban Design

Texas Department of Transportation 2016

US 181 HARBOR BRIDGE

SHARED USE PATH AMENITIES LAYOUT

SHEET 1 OF 3

DESIGN	FED.RD. DIV.NO.	FEDERAL AID PROJECT NO.		HIGHWAY NO.
GRAPHICS	X	(See Title Sheet)		
	STATE	DISTRICT	COUNTY	SHEET NO.
CHECK	TEXAS	CRP	NUECES	SUP101
CHECK	CONTROL	SECTION	JOB	
	0101	06	095	140

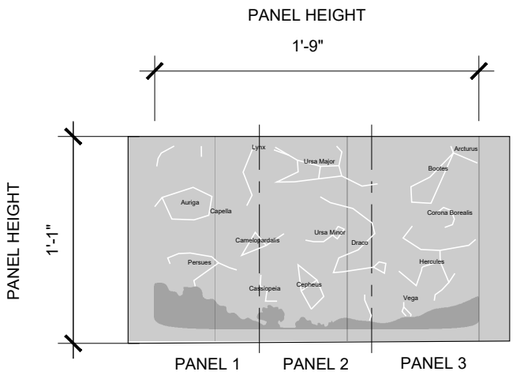

GENERAL NOTES:

A. LANDSCAPE ARCHITECT TO PROVIDE CAMERA READY ART WORK
B. COORDINATE ETCHING WITH PANEL VENDER

6 GRAPHIC PANEL-EXAMPLE — NOT TO SCALE

MANUFACTURER:

HI-SPY VIEWING MACHINES
OR SIMILAR MFR.
1043 DIVISION STREET
COBOURG, ONTARIO,
CANADA K9A 5Y5
TEL: 289-252-2019
rod@hispviewing.com

INSTALLATION NOTES:

A. INSTALL TO CONCRETE DECK PER MANUFACTURES RECOMMENDATION
B. MODEL- NON-COINS 35x TELESCOPE VIEWER, STANDARD COLOR

5 TELESCOPE (PAY ITEM 1002-6016) — NOT TO SCALE

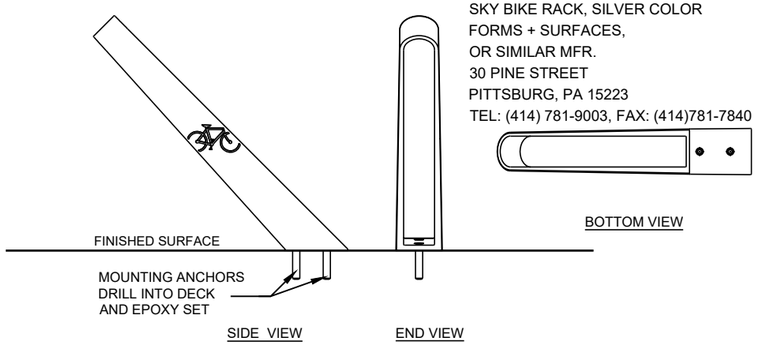

MANUFACTURER:

SKY BIKE RACK, SILVER COLOR
FORMS + SURFACES,
OR SIMILAR MFR.
30 PINE STREET
PITTSBURG, PA 15223
TEL: (414) 781-9003, FAX: (414)781-7840

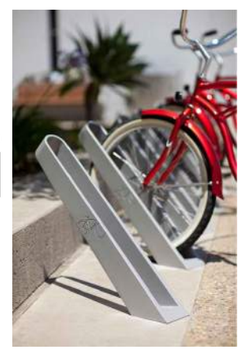

4 BIKE RACKS (PAY ITEM 1002-6007) — NOT TO SCALE

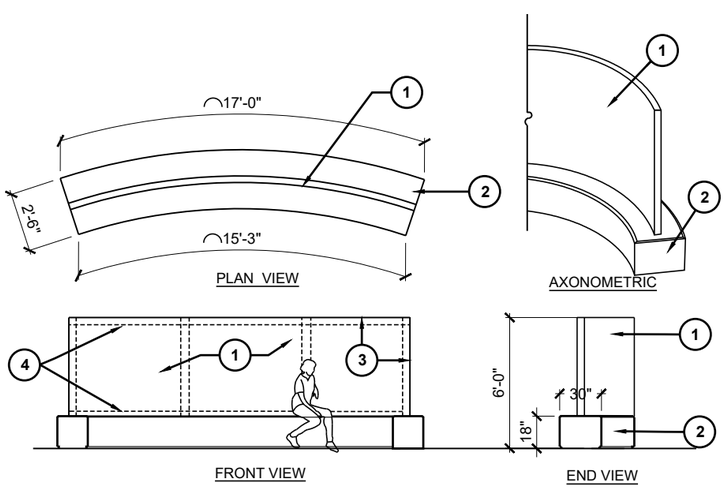

SHOP DRAWINGS:

A. CONTRACTOR TO PROVIDE SHOP DRAWINGS OF PREPARED FEATURES FOR REVIEW AND APPROVAL
B. CONTRACTOR TO USE RECYCLED CONCRETE AGGREGATE, COLOR TO BE SELECTED
C. BENCH AND LIGHT PANEL BY OTHERS, FOR REFERENCE ONLY

DETAIL NOTES:

1. 1" THICK EDGE LIT (TOP/BOTTOM) ACRYLIC PANEL. SEE DETAIL 6, THIS SHEET.
2. PRECAST CONCRETE BENCH, LIGHT SANDBLAST FINISHED, EXPOSED AGGREGATE.
3. ALUMINUM FRAME
4. LED LIGHT STRIPS TOP & BOTTOM

LIGHT PANEL:

FORMS + SURFACES
OR EQUAL MFR.
ATTN CAREY DAVIS (800)451-0140
CAREY.DAVIS@
FORMS-SURFACES.COM

3 BENCH AT BELVEDERE (PAY ITEM 1002-6004) — NOT TO SCALE

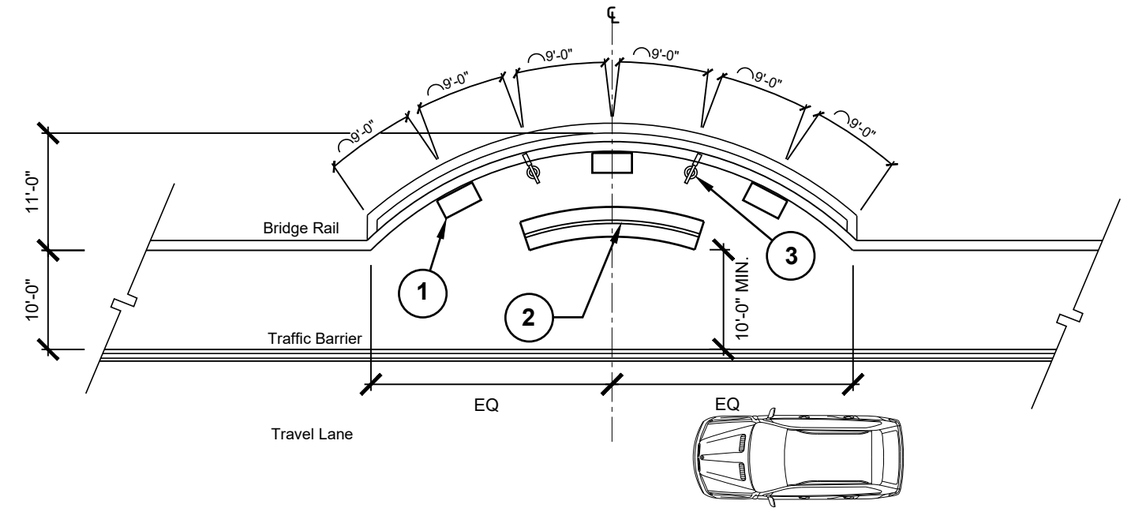

DETAIL NOTES:

1. EDUCATIONAL MAP, **SEE DETAIL 1, SHEET SUP 103**.
2. BENCH SEATING WITH INTEGRAL SIGNAGE, **SEE DETAIL 3, THIS SHEET**.
3. TELESCOPE, **SEE DETAIL 5, THIS SHEET**.

2 BELVEDERE AMENITIES LAYOUT — SCALE 1/16"=1'-0"

DETAIL NOTES:

1. EDUCATIONAL MAP, **SEE DETAIL 1, SHEET SUP 103**.
2. BENCH SEATING WITH INTEGRAL SIGNAGE, **SEE DETAIL 3, THIS SHEET**.
3. TELECSOPE, **SEE DETAIL 5, THIS SHEET**.

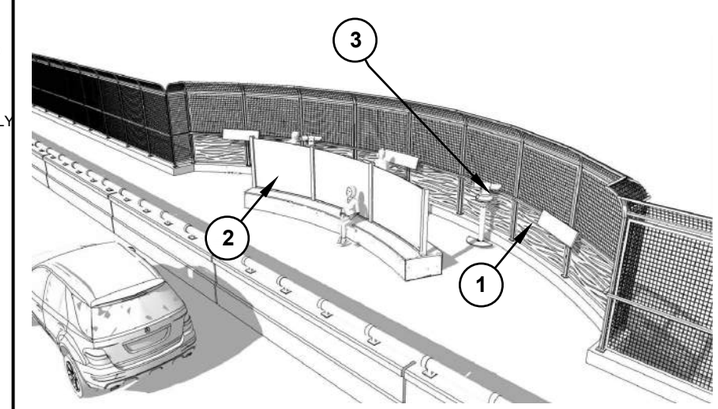

1 BELVEDERE AXONOMETRIC — NOT TO SCALE

STATE OF TEXAS
MICHAEL P. MAUER
1510
REGISTERED
LANDSCAPE ARCHITECT
February 7, 2022

FLATIRON/DRAGADOS LLC

M2L Associates Inc.
Houston, Texas 77024
T: 713-722-8897 F: 713-722-8048
•Landscape Architecture•
•Land Planning• Urban Design•

Texas Department of Transportation ® 2016

US 181 HARBOR BRIDGE

SHARED USE PATH TRAIL

Amenity Details

SHEET 2 OF 3

DESIGN	FED.RD. DIV.NO.	FEDERAL AID PROJECT NO.		HIGHWAY NO.
GRAPHICS	X	(See Title Sheet)		
	STATE	DISTRICT	COUNTY	SHEET NO.
CHECK	TEXAS	CRP	NUECES	SUP102
CHECK	CONTROL	SECTION	JOB	141
	0101	06	095	

4 NOT USED — NOT TO SCALE

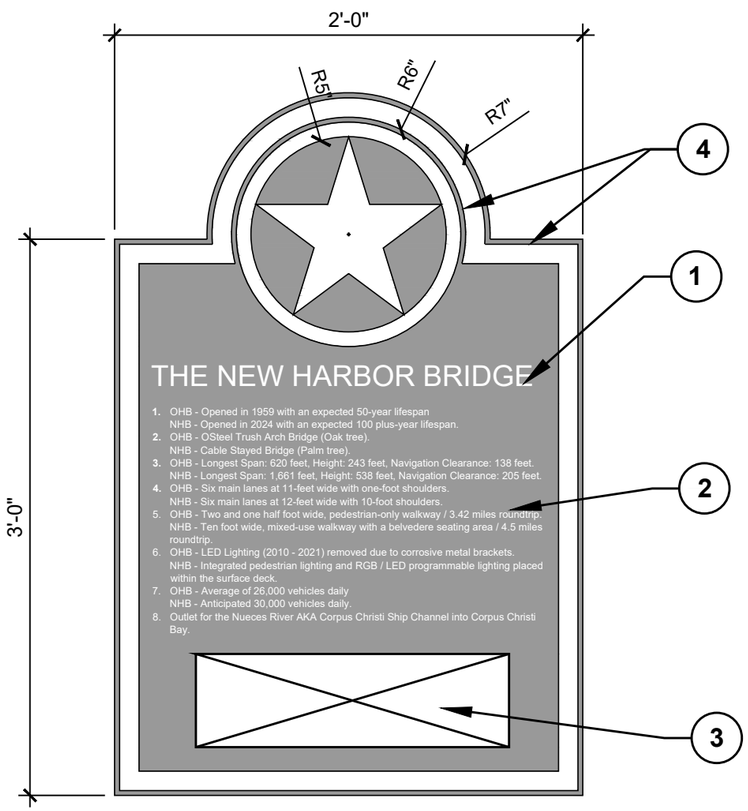

DETAIL NOTES

1. 1-1/2" LETTERS, ALL CAPS
2. $A\frac{1}{2}$" HIGH, UPPER / LOWER CASE LETTERS
3. GRAPHIC OF HARBOR BRIDGE TO BE PROVIDED BY OWNER
4. $\frac{1}{4}$" BORDER CONTINUOUS

GENERAL NOTES

A. 1/4" ALUMINUM
B. FONT TO BE CLEARVIEW HIGHWAY 2W - REVERSE DIECUT FROM SECOND VINYL LAYER
C. FIRST LAYER -DIAMOND GRADE #3 SHEETING
D. SECOND LAYER TO BE COLORED VINYL
E. BACKSIDE TO BE PLAIN ALUMINUM FINISH
F. SEE SHEET SMD (TWT) -08, SMALL ROAD SIGNS FOR POST AND FOUNDATION DETAILS (POSTS, BRACKETS, AND FOUNDATION INCIDENTAL AND NOT PAID FOR SEPARATELY)
G. CONTRACTOR TO PROVIDE SHOP DRAWINGS FOR REVIEW AND APPROVAL OF OWNER'S REPRESENTATIVE OR LANDSCAPE ARCHITECT OF ARTWORK.
H. SIGN GRAPHICS BASED ON MUTCD, 2012 REV 2 ADDITION OF D7 - 10bT

COLOR LEGEND

WHITE

BROWN

3 INFORMATIONAL PLAQUE — NOT TO SCALE

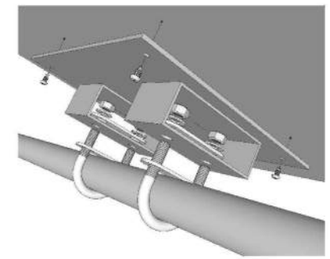

D. EXPLODED DETAIL- Railing Mount Bracket Assembly
N.T.S.

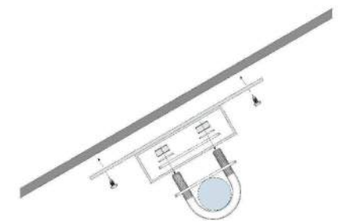

C. EXPLODED DETAIL- Railing Mount Bracket Assembly
N.T.S.

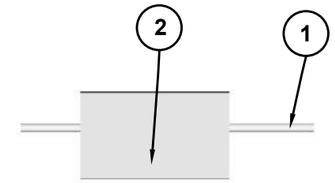

B. SIGN ELEVATION - Plan View
N.T.S.

DETAIL NOTES:

1. HAND RAIL, **SEE SHOP DRAWINGS FOR CONFIRMATION OF ATTACHMENT DETAIL**
2. 24" x 48" X 3/4" THICK IZONE PANEL, ICE FINISH, COORDINATE WITH OWNER/END USER ON SUITABLE INTERPRETIVE GRAPHICS TO BE UTILIZED. CONTRACTOR TO PROVIDE GRAPHIC DESIGNER TO CREATE FINAL EXHIBIT.
3. ATTACH IZONE PANEL DIRECTLY TO MOUNTING BRACKIET WITH STAINLESS STEEL 1/4" -20 BOLTS AS NEEDED.

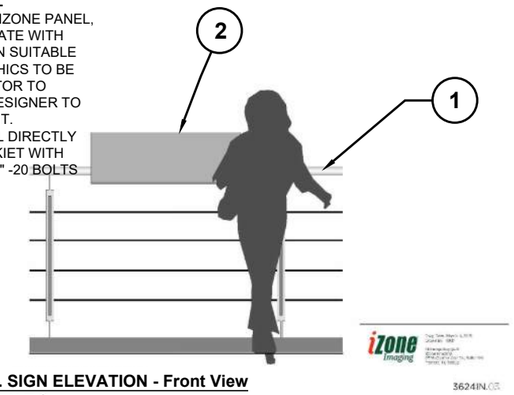

B. SIGN ELEVATION - Front View
N.T.S.

2 INTERPRETIVE SIGNAGE (PAY ITEM 1002-6011) — NOT TO SCALE

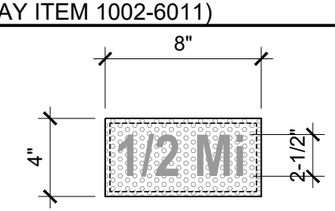

TYPICAL ELEVATION
1/4 MILE INTERVALS UNLESS NOTED ON SUP101

DETAIL NOTES:

1. TRAFFIC RAIL, **SEE SHOP DRAWINGS**
2. CAST INTO CONCRETE BARRIER TO RECEIVE LED LIGHT AND EPOXY INTO PLACE. PROVIDE WATER PROOF SEALANT AROUND EXTERIOR OF LIGHT HOUSING
3. SOLARTILE II, 4" DIA. X 2-1/2" THICK, BLUE COLOR LED SOLAR PATH LIGHT

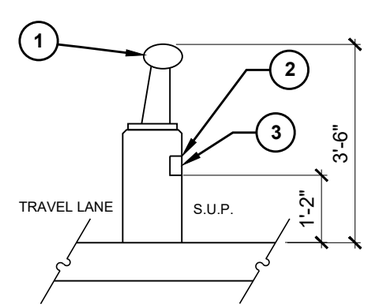

MATERIALS NOTES:

SOLATILE II SOLAR POWERED LIGHTING
SOLARPATH INC.
123 TOWN SQUARE PLACE, #333
JERSEY CITY, NJ 07310
TEL: (888)333-7652
CONTACT@SOLARPATHUSA.COM

1 SHARED USE PATH LED LIGHTING (PAY ITEM 1007-6012) — NOT TO SCALE

STATE OF TEXAS
MICHAEL P. MAUER
1510
REGISTERED LANDSCAPE ARCHITECT
SEP 2, 2022

FLATIRON/DRAGADOS LLC

M2L Associates Inc.
Houston, Texas 77024
T: 713-722-8897 F: 713-722-8048
•Landscape Architecture•
•Land Planning• Urban Design•

Texas Department of Transportation ® 2016

US 181 HARBOR BRIDGE

SHARED USE PATH TRAIL

Amenity Details

SHEET 3 OF 3

DESIGN	FED.RD. DIV.NO.	FEDERAL AID PROJECT NO.		HIGHWAY NO.
GRAPHICS	X	(See Title Sheet)		
	STATE	DISTRICT	COUNTY	SHEET NO.
CHECK	TEXAS	CRP	NUECES	SUP103
CHECK	CONTROL	SECTION	JOB	142
	0101	06	095	

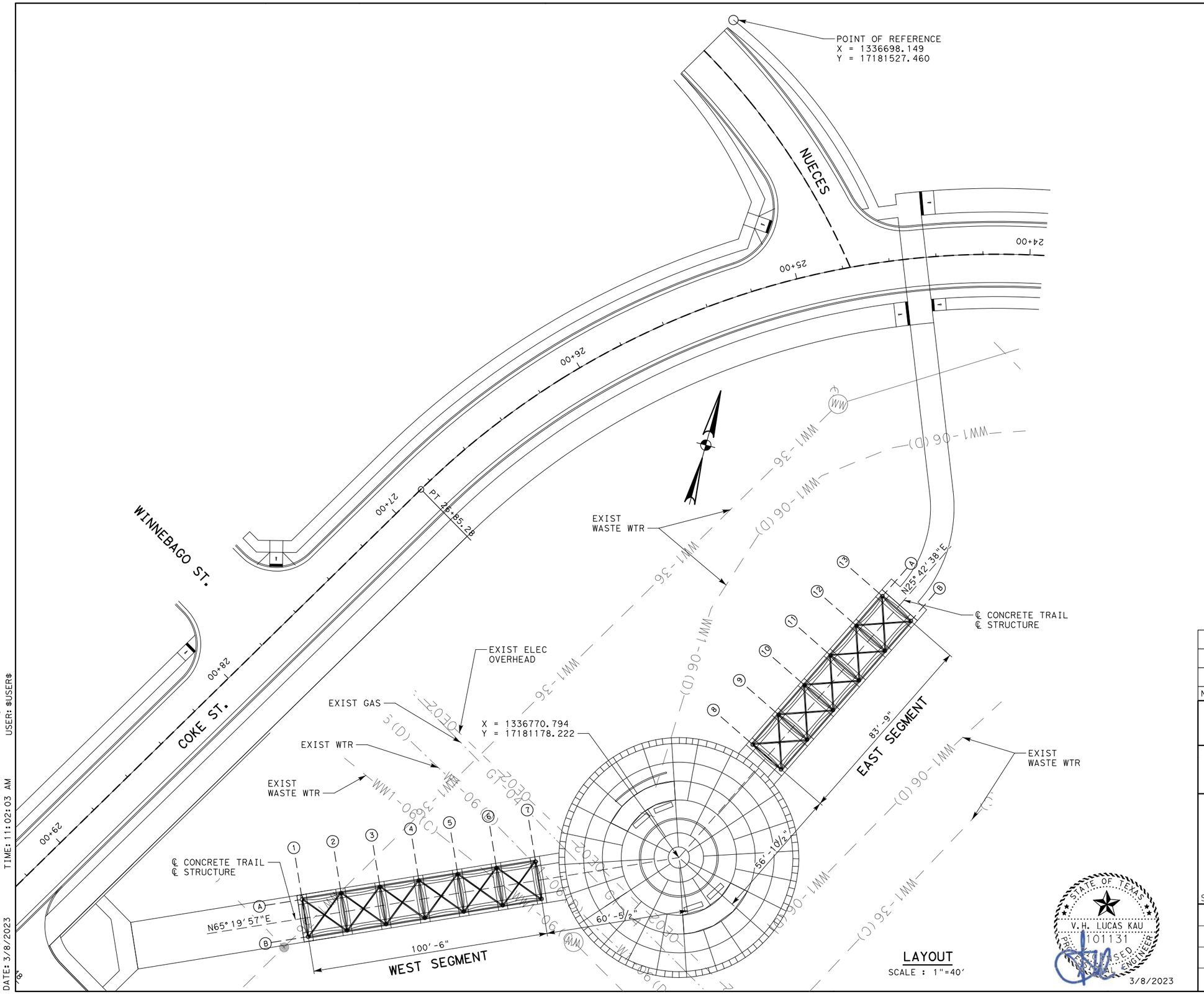

NOTES:

1. DESIGNED NEW TRELLIS FOUNDATION ACCORDING TO AASHTO LRFD BRIDGE DESIGN SPECIFICATIONS, 7TH EDITION (2014).
2. ALL REINFORCING SHALL BE GRADE 60.
3. ALL CONCRETE SHALL BE CLASS "C" WITH A MINIMUM COMPRESSIVE STRENGTH OF 3,600 P.S.I.
4. SEE "CONSTRUCTION DETAILS" SHEET 1 OF 10 FOR 6" THICK CONCRETE TRAIL DETAILS.
5. SEE "SOUTH PARK CIVIC PLAZA OVERALL LAYOUT PLAN" AND "SOUTH PARK CIVIC PLAZA LAYOUT ENLARGEMENT" SHEETS FOR ADDITIONAL NOTES AND DETAILS.
6. THE DETAILS PROVIDED HEREIN ARE FOR THE PROPOSED FOUNDATION FOR THE RELOCATED ALAMEDA TRELLIS PEDESTRIAN STRUCTURE ONLY. THE DESIGNER ASSUMES NO RESPONSIBILITY FOR THE DESIGN OR CONDITION OF THE EXISTING STRUCTURE.
7. TOP OF PEDESTAL AND DRILLED SHAFT ELEVATIONS SHALL BE ADJUSTED TO ACCOMMODATE THE PROFILE OF THE EXISTING STRUCTURE, TO ENSURE PROPER FITTING AND PLACEMENT OF THE EXISTING STRUCTURE OVER THE PROPOSED FOUNDATION.
8. FOR EXISTING ALAMEDA TRELLIS PEDESTRIAN STRUCTURE DETAILS, REFER TO THE RELATED AS-BUILT DRAWINGS.
9. COLUMN, BASE-PLATE, AND OTHER SUPER-STRUCTURE ELEMENTS DIMENSIONS AND DETAILS ARE PER AS-BUILT DRAWINGS.
10. PLACEMENT OF ANCHOR BOLTS IN THE PROPOSED PEDESTAL SHALL MATCH THEIR PLACEMENT PATTERN ON THE BASEPLATE OF THE EXISTING STRUCTURE TO BE RELOCATED. CONTRACTOR TO VERIFY PATTERN AT EACH POST PRIOR TO PLACING ANCHOR BOLTS IN PEDESTAL.
11. ALL COVER DIMENSIONS ARE CLEAR COVER DIMENSIONS.
12. REINFORCING STEEL BEND BARS DIMENSIONS ARE OUTSIDE DIMENSIONS.
13. ALL CONDUIT, GROUND WIRES. DRAINS, ETC., ARE TO BE IN PLACE BEFORE CONCRETE IS PLACED.
14. SEE GEOTECHNICAL RECOMMENDATIONS PREPARED BY PSI, DATED APRIL 15 2021, FOR ADDITIONAL INFORMATION. FOR DRILLED SHAFT CONSTRUCTION CONSIDERATIONS REFER TO THE "DRILLED PIER CONSTRUCTION CONSIDERATIONS" TABLE AND OTHER RELEVANT SECTIONS IN THE REPORT. PER GEOTECHNICAL RECOMMENDATIONS, USE OF TEMPORARY CASING IS ANTICIPATED.
15. CONTRACTOR TO FIELD VERIFY EXISTING UTILITIES BEFORE CONSTRUCTION OF TRELLIS FOUNDATION.

NO.	DATE	REVISION	APPROVED

FLATIRON/DRAGADOS LLC

Stantec
Engineered by Stantec Consulting Services Inc.
Texas Registered Engineering Firm F-6324

Texas Department of Transportation ® 2019

US 181 HARBOR BRIDGE

ALAMEDA TRELLIS RELOCATION

SOUTH PARK CIVIC PLAZA FOUNDATION DETAILS

SCALE: AS SHOWN — SHEET 1 OF 3

DESIGN	FED. RD. DIV. NO.	FEDERAL AID PROJECT NO.		HIGHWAY NO.
AAM	6	HPX597(1)		IH 37
GRAPHICS	STATE	DISTRICT	COUNTY	SHEET NO.
JG	TEXAS	CRP	NUECES	DET01
CHECK	CONTROL	SECTION	JOB	143
KR				
CHECK	0101	06	095	
VHLK				

STATE OF TEXAS
V. H. LUCAS KAU
101131
PROFESSIONAL ENGINEER
3/8/2023

FILE: c:\pw*online\stantec\d0318016\STRUCT-DET01.dgn
DATE: 3/8/2023 TIME: 11:02:03 AM USER: $USER$

NOTES:

1. FOR GENERAL NOTES SEE SHEET 1 OF 3.

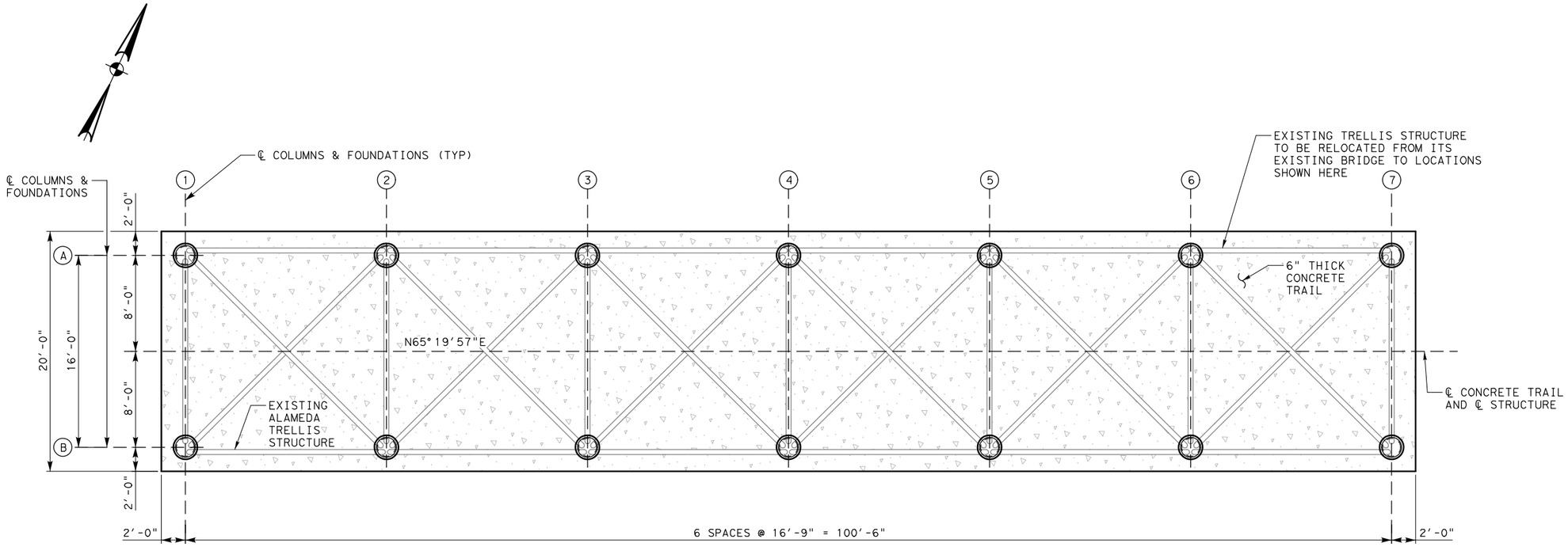

PLAN - WEST SEGMENT

SCALE : 1"=10′

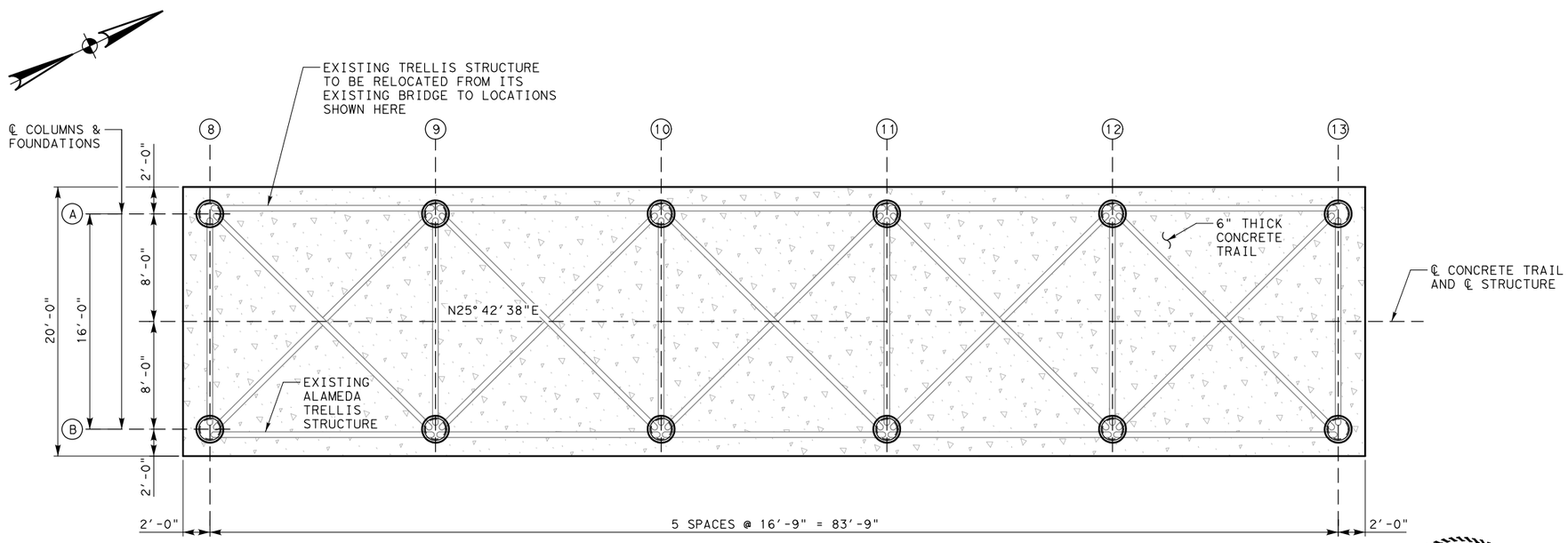

PLAN - EAST SEGMENT

SCALE : 1"=10′

STATE OF TEXAS
V.H. LUCAS KAU
101131
PROFESSIONAL ENGINEER
3/8/2023

NO.	DATE	REVISION	APPROVED

FLATIRON/DRAGADOS LLC

Stantec
Engineered by Stantec Consulting Services Inc.
Texas Registered Engineering Firm F-6324

Texas Department of Transportation ® 2019

US 181 HARBOR BRIDGE

ALAMEDA TRELLIS RELOCATION

SOUTH PARK CIVIC PLAZA FOUNDATION DETAILS

SCALE: AS SHOWN — SHEET 2 OF 3

DESIGN	FED.RD. DIV.NO.	FEDERAL AID PROJECT NO.		HIGHWAY NO.
AAM	6	HPX597(1)		IH 37
GRAPHICS JG	STATE	DISTRICT	COUNTY	SHEET NO.
CHECK KR	TEXAS	CRP	NUECES	DET02
CHECK	CONTROL	SECTION	JOB	144
VHLK	0101	06	095	

FILE: c:\pw*online\stantec\d0318016\STRUCT-DET02.dgn
DATE: 3/8/2023 TIME: 11:02:11 AM USER: $USER$

NOTES:

FOR GENERAL NOTES, SEE SHEET 1 OF 3.

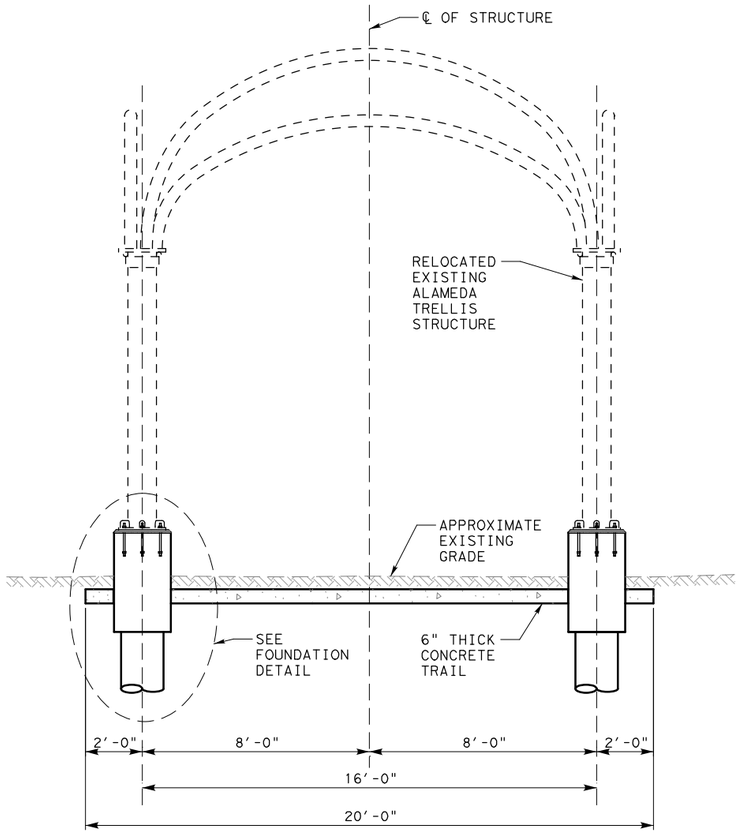

TYPICAL SECTION

SCALE : 3/16" = 1'-0"

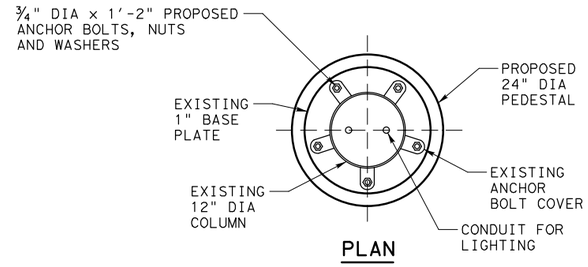

PLAN

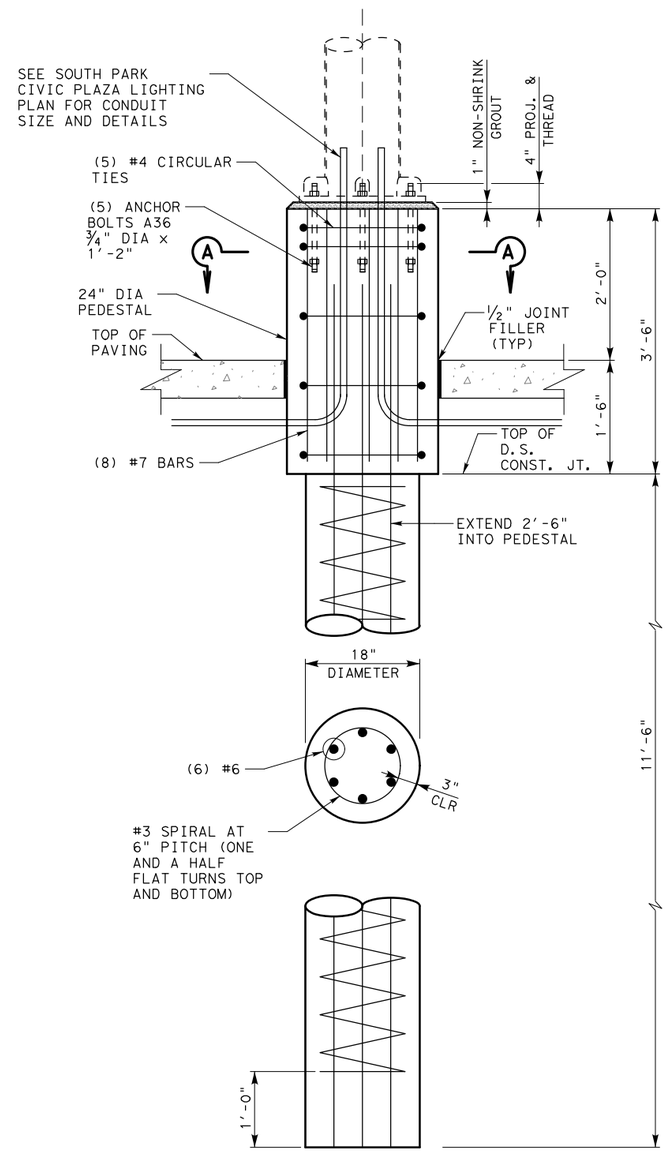

FOUNDATION DETAIL

SCALE : 1/2" = 1'-0"

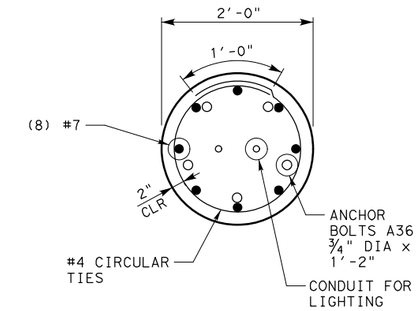

SECTION A-A

STATE OF TEXAS
V. H. LUCAS KAU
101131
LICENSED PROFESSIONAL ENGINEER
3/8/2023

NO.	DATE	REVISION	APPROVED

FLATIRON/DRAGADOS LLC

Stantec
Engineered by Stantec Consulting Services Inc.
Texas Registered Engineering Firm F-6324

Texas Department of Transportation ® 2019

US 181 HARBOR BRIDGE

ALAMEDA TRELLIS RELOCATION
SOUTH PARK CIVIC PLAZA FOUNDATION DETAILS

SCALE: AS SHOWN — SHEET 3 OF 3

DESIGN	FED. RD. DIV. NO.	FEDERAL AID PROJECT NO.		HIGHWAY NO.
AAM	6	HPX597(1)		IH 37
GRAPHICS	STATE	DISTRICT	COUNTY	SHEET NO.
JG	TEXAS	CRP	NUECES	DET03
CHECK	CONTROL	SECTION	JOB	145
KR	0101	06	095	
CHECK VHLK				

FILE: c:\pwworking\stantec\d0318016\STRUCT-DET03.dgn
DATE: 3/8/2023 TIME: 11:02:18 AM USER: $USER$

CONDUIT/CONDUCTOR CHART SUMMARY						
RUN NO.	LENGTH (FT)	GROUND	CNDTR	CONDUIT TYPE & LENGTH (FT)		CIRCUIT
		#8	#8	1.5 IN PVC	2 IN PVC	
		BARE	XHHW	SCH 40	SCH 40	
ef-01	135	1	2		1	#7
ef-02	15	1	2		1	#7
ef-03	20	1	2	1		#7
ef-04	35	1	2	1		#7
ef-05	20	1	2	1		#7
ef-06	35	1	2	1		#7
ef-07	20	1	2	1		#7
ef-08	240	1	2		1	#5
ef-09	15	1	2		1	#5
ef-10	20	1	2	1		#5
ef-11	35	1	2	1		#5
ef-12	20	1	2	1		#5
ef-13	35	1	2	1		#5
ef-14	20	1	2	1		#5
ef-15	35	1	2	1		#5
ef-16	20	1	2	1		#5

LIGHT FIXTURE SUMMARY		
DESCRIPTION	FIXTURE ID	MOUNTING TYPE
LUMEC LIGHT	efC1	TRELLIS TOP
LUMEC LIGHT	efC2	TRELLIS TOP
LUMEC LIGHT	efC3	TRELLIS TOP
LUMEC LIGHT	efC4	TRELLIS TOP
LUMEC LIGHT	efC5	TRELLIS TOP
LUMEC LIGHT	efC6	TRELLIS TOP
LUMEC LIGHT	efC7	TRELLIS TOP
LUMEC LIGHT	efC8	TRELLIS TOP
LUMEC LIGHT	efC9	TRELLIS TOP
LUMEC LIGHT	efC10	TRELLIS TOP
LUMEC LIGHT	efC11	TRELLIS TOP
LUMEC LIGHT	efC12	TRELLIS TOP
LUMEC LIGHT	efC13	TRELLIS TOP
LUMEC LIGHT	efC14	TRELLIS TOP

SCHEDULE OF GROUND BOXES				
ITEM	DESCRIPTION	GROUND BOX NO.	QTTY	SERVICE
624	GROUND BOX TY A (W/APRON)	efGB1	1	LAKE
624	GROUND BOX TY A (W/APRON)	efGB2	2	LAKE

LEGEND

- METAL TRELLIS POST TOP LIGHT
- GROUND BOX TY A (W/APRON)
- CONDUIT (PVC)
- XCXX — XCXX: LIGHT FIXTURE NUMBER; SERVICE NUMBER
- XXX-XXX — SERVICE AND RUN NUMBER
- XGBXX — XGBXX: GROUND BOX NUMBER; SERVICE NUMBER
- EXIST ELECTRICAL SERVICE
- EXIST LIGHT POLE

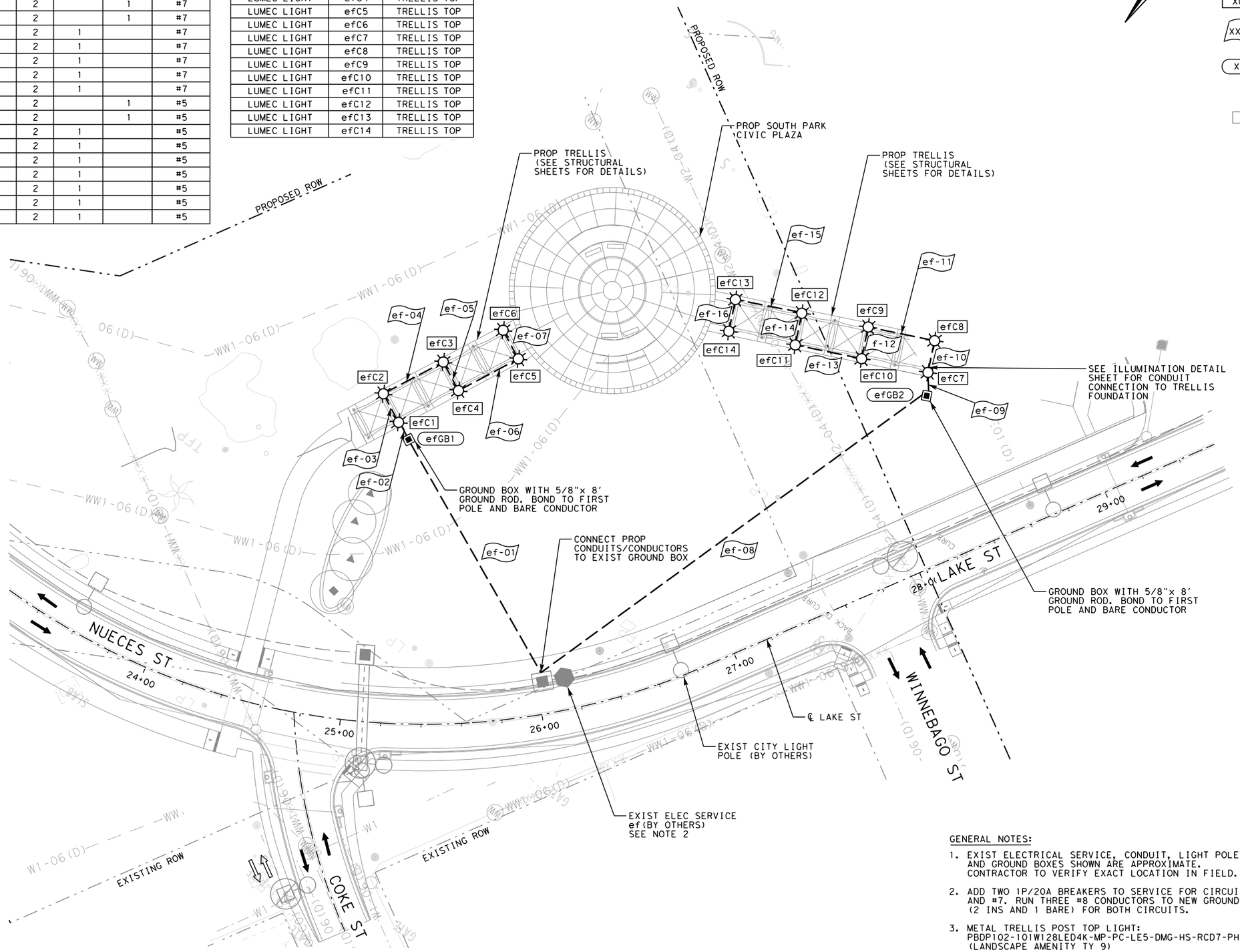

GENERAL NOTES:

1. EXIST ELECTRICAL SERVICE, CONDUIT, LIGHT POLES AND GROUND BOXES SHOWN ARE APPROXIMATE. CONTRACTOR TO VERIFY EXACT LOCATION IN FIELD.
2. ADD TWO 1P/20A BREAKERS TO SERVICE FOR CIRCUIT #5 AND #7. RUN THREE #8 CONDUCTORS TO NEW GROUND BOXES (2 INS AND 1 BARE) FOR BOTH CIRCUITS.
3. METAL TRELLIS POST TOP LIGHT: PBDP102-101W128LED4K-MP-PC-LE5-DMG-HS-RCD7-PH8-MGY (LANDSCAPE AMENITY TY 9)

NO.	REVISIONS	BY	DATE

STATE OF TEXAS — GANESH GOPALAN — 102071 — LICENSED PROFESSIONAL ENGINEER — 03/10/23

US 181 HARBOR BRIDGE

SOUTH PARK CIVIC PLAZA

ILLUMINATION PLAN

SCALE: 1"=50'

FLATIRON/DRAGADOS LLC

IEA 18333 PRESTON ROAD SUITE 205 DALLAS, TEXAS 75252 (214) 884-4253 Firm Registration No. F-10161

Texas Department of Transportation © 2017

SHEET 1 OF 1

FED. RD. DIV. NO.	FEDERAL AID PROJECT NO.		SHEET NO.
6	HP X597(1)		ED01
STATE	STATE DIST. NO.	COUNTY	146
TEXAS	CRP	NUECES	
CONT.	SECT	JOB	HIGHWAY NO.
0101	06	095	US 181

Plotted: 3/10/2023 9:38:00 AM
Pen Table: NAMETIME.tbl
Design File: pw:\\stantec-sc-pw.bentley.com:stantec-sc-pw\Documents\01 Projects\HBR\Build Work\Design\12-Illumination\12.01-Sheets\HBR_SL_SPARK_PLN01.dgn

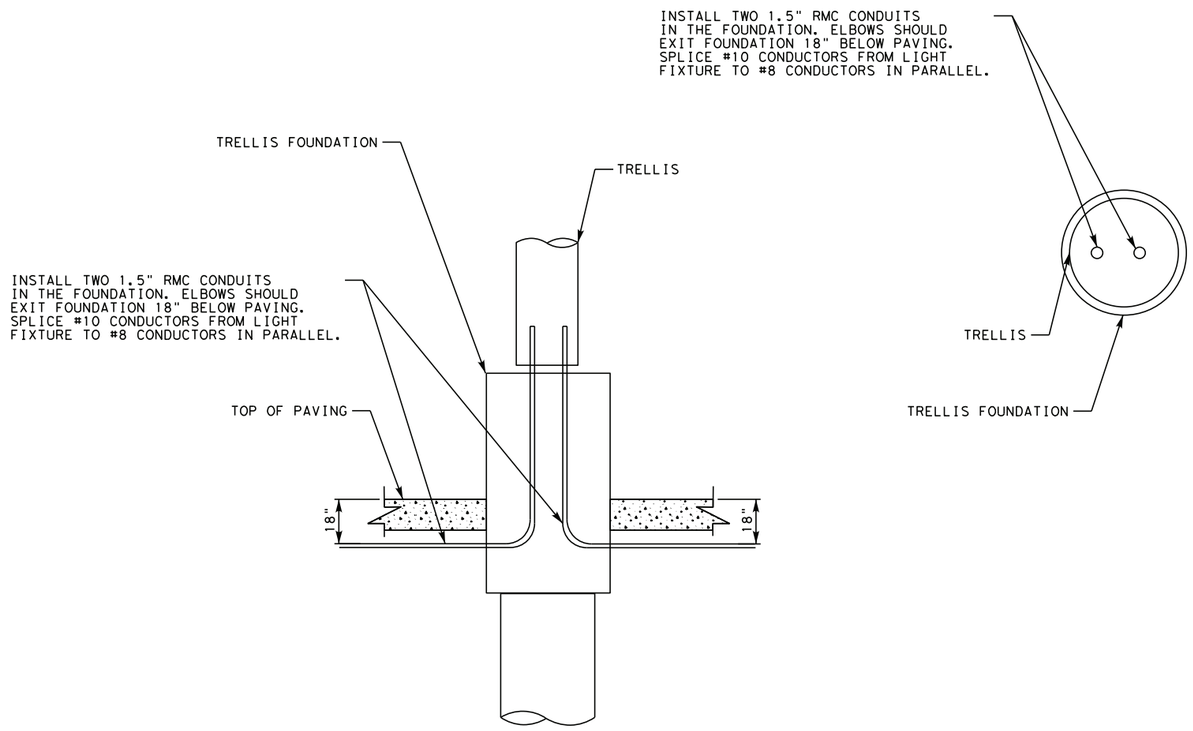

NO.	REVISIONS	BY	DATE

STATE OF TEXAS
GANESH GOPALAN
102071
LICENSED
PROFESSIONAL ENGINEER
03/10/23

US 181 HARBOR BRIDGE

SOUTH PARK
CIVIC PLAZA

ILLUMINATION DETAILS

SCALE: 1"=50'

FLATIRON/DRAGADOS LLC

IEA
18333 PRESTON ROAD
SUITE 205
DALLAS, TEXAS 75252
(214) 884-4253
Firm Registration No. F-10161

Texas Department of Transportation
© 2017

SHEET 1 OF 1

FED. RD. DIV. NO.	FEDERAL AID PROJECT NO.			SHEET NO.
6	HP X597(1)			ED02
STATE	STATE DIST. NO.	COUNTY		147
TEXAS	CRP	NUECES		
CONT.	SECT	JOB		HIGHWAY NO.
0101	06	095		US 181

Plotted: 3/10/2023 11:38:43 AM
Pen Table: NAMETIME.tbl
Design File: pw:\\stantec-sc-pw.bentley.com:stantec-sc-pw\Documents\01 Projects\HBR\Build Work\Design\12-Illumination\12.01-Sheets\HBR-SL_SPARK_DET01.dgn

DISCLAIMER:
The use of this standard is governed by the "Texas Engineering Practice Act". No warranty of any kind is made by TxDOT for any purpose whatsoever. TxDOT assumes no responsibility for the conversion of this standard to other formats or for incorrect results or damages resulting from its use.

GENERAL NOTES FOR ALL ELECTRICAL WORK

1. The location of all conduits, junction boxes, ground boxes, and electrical services is diagrammatic and may be shifted to accommodate field conditions.

2. Provide new and unused materials. Ensure that all materials and installations comply with the applicable articles of the National Electrical Code (NEC), TxDOT standards and specifications, National Electrical Manufacturers Association (NEMA), and are listed by Underwriters Laboratories (UL) or a Nationally Recognized Testing Lab (NRTL). NRTLs such as Canadian Standard Association (CSA), Intertek Testing Services NA Inc., or FM Approvals LLC can be considered equivalent to UL. Where reference is made to NEMA listed devices, International Electrotechnical Commission (IEC) listed devices will not be considered an acceptable equal to a NEMA listed device. Acceptable devices may have both a NEMA and IEC listing. Faulty fabrication or poor workmanship in any material, equipment, or installation is justification for rejection. Replace or reinstall rejected material or equipment at no additional cost to the Department.

3. Miscellaneous nuts, bolts and hardware, except for high strength bolts, may be stainless steel when plans specify galvanized, provided the bolt size is ½ in. or less in diameter.

4. Provide the following test equipment as required by the Engineer to confirm compliance with the contract and the NEC: voltmeter, ammeter, megohm meter (1000 volt DC), ground resistance tester, torque wrenches, and torque screwdrivers. Ensure all equipment has been properly calibrated within the last year. Provide calibration certification to the Engineer upon request. Operate test equipment during inspection as requested by the Engineer.

5. Install grounding as shown on the plans and in accordance with the NEC. Ensure all metallic conduits; metal poles; luminaires; and metal enclosures are bonded to the equipment grounding conductor. Provide stranded bare copper or green insulated grounding conductors. Ground rods, connectors, and bonding jumpers are subsidiary to the various bid items.

6. When required by the Engineer, notify the Department in writing of materials from the Material Producers List (MPL) intended for use on each project. Prequalified materials are listed on the MPL on TxDOT's website under "Roadway Illumination and Electrical Supplies." No substitutions will be allowed for materials on this list.

CONDUIT

A. MATERIALS

1. Provide conduit, junction boxes, fittings, and hardware as per TxDOT Departmental Material Specification (DMS) 11030 "Conduit" and Item 618 "Conduit" of TxDOT's "Standard Specifications For Construction And Maintenance Of Highways, Streets, And Bridges," latest edition. Provide conduits listed under Item 618 on the MPL under "Roadway Illumination and Electrical Supplies." Provide conduit types according to the descriptive code or as shown on the plans. Do not substitute other types of conduits for those shown. Provide liquidtight flexible metal conduit (LFMC) when flexible conduit is called for on galvanized steel rigid metallic conduit (RMC) systems. Provide liquidtight flexible nonmetallic conduit (LFNC) when flexible conduit is called for on polyvinyl chloride (PVC) systems.

2. Provide galvanized steel RMC for all exposed conduits, unless otherwise shown on the plans. Properly bond all metal conduits.

3. Unless otherwise shown on the plans, provide junction boxes with a minimum size as shown in the following table, which applies to the greatest number of conductors entering the box through one conduit with no more than four conduits per box. When a mixture of conductor sizes is present, count the conductors as if all are of the larger size. For situations not applicable to the table, size junction boxes in accordance with NEC.

AWG	3 CONDUCTORS	5 CONDUCTORS	7 CONDUCTORS
#1	10" x 10" x 4"	12" x 12" x 4"	16" x 16" x 4"
#2	8" x 8" x 4"	10" x 10" x 4"	12" x 12" x 4"
#4	8" x 8" x 4"	10" x 10" x 4"	10" x 10" x 4"
#6	8" x 8" x 4"	8" x 8" x 4"	10" x 10" x 4"
#8	8" x 8" x 4"	8" x 8" x 4"	8" x 8" x 4"

4. Junction boxes with an internal volume of less than 100 cu. in. and supported by entering raceways must have threaded entries or hubs identified for the intended purpose and supported by connection of two or more rigid metal conduits. Secure conduit within 3 ft. of the enclosure or within 18 in. of the enclosure if all conduit entries are on the same side. Mechanically secure all junction boxes with an internal volume greater than 100 cu. inches.

5. Provide hot dipped galvanized cast iron or sand cast aluminum outlet boxes for junction boxes containing only 10 AWG or 12 AWG conductors. Do not use die cast aluminum boxes. Size outlet boxes according to the NEC.

6. Do not use intermediate metal conduit (IMC) or electrical metallic tubing (EMT) unless specifically required by the plan sheets. When EMT is called for, provide junction boxes made from galvanized steel sheeting, listed and approved for outdoor use, unless otherwise noted on the plans. Size all galvanized steel junction boxes in accordance with the NEC. Provide junction boxes for IMC conduit systems that meet the same requirements for junction boxes used with RMC systems.

7. Provide PVC junction boxes intended for outdoor use on PVC conduit systems, unless otherwise noted on the plans.

8. Provide PVC elbows in PVC conduit systems, unless otherwise shown on the plans. Use only a flat, high tensile strength polyester fiber pull tape for pulling conductors through the PVC conduit system. When galvanized steel RMC elbows are specifically called for in the plans and any portion of the RMC elbow is buried less than 18 in., ground the RMC elbow by means of a grounding bushing on a rigid metal extension. Grounding of the rigid metal elbow is not required if the entire RMC elbow is encased in a minimum of 2 in. of concrete. PVC extensions are allowed on these concrete encased rigid metal elbows. RMC or PVC elbows are subsidiary to various bid items.

9. When required, provide High-Density Polyethylene (HDPE) conduit with factory installed internal conductors according to Item 622 "Duct Cable." At the Contractor's request and with approval by the Engineer, substitute HDPE conduit with no conductors for bored schedule 40 or schedule 80 PVC conduit bid under Item 618. Ensure bored HDPE substituted for PVC is schedule 40 and of the same size PVC called for in the plans. Ensure the substituted HDPE meets the requirements of Item 622, except that the conduit is supplied without factory-installed conductors. Make the transition of the HDPE conduit to PVC (or RMC elbow when required) at the bore pit. Provide conduit of the size and schedule as shown on the plans. Do not extend substituted conduit into ground boxes or foundations. Provide PVC or galvanized steel RMC elbows as called for at all ground boxes and foundations.

10. Use two-hole straps when supporting 2 in. and larger conduits. On electrical service poles, properly sized stainless steel or hot dipped galvanized one-hole standoff straps are allowed on the service riser conduit.

B. CONSTRUCTION METHODS

1. Provide and install expansion joint conduit fittings on all structure-mounted conduits at the structure's expansion joints to allow for movement of the conduit. In addition, provide and install expansion joint fittings on all continuous runs of galvanized steel RMC conduit externally exposed on structures such as bridges at maximum intervals of 150 ft. When requested by the project Engineer, supply manufacturer's specification sheet for expansion joint conduit fittings. Repair or replace expansion joint fittings that do not allow for movement at no additional cost to the Department. Provide the method of determining the amount of expansion to the Engineer upon request. Do not use LFMC or LFNC as a substitute for the required expansion conduit fittings.

2. Space all conduit supports at maximum intervals of 5 ft. Install conduit spacers when attaching metal conduit to surface of concrete structures. See "Conduit Mounting Options" on ED(2). Install conduit support within 3 ft. of all enclosures and conduit terminations.

3. Do not attach conduit supports directly to pre-stressed concrete beams except as shown specifically in the plans or as approved by the Engineer.

4. Unless otherwise shown on the plans, jack or bore conduit placed beneath existing roadways, driveways, sidewalks, or after the base or surfacing operation has begun. Backfill and compact the bore pits below the conduit per Item 476 "Jacking, Boring, or Tunneling Pipe or Box" prior to installing conduit or duct cable to prevent bending of the connections.

5. When placing conduit in the sub-grade of new roadways, backfill all trenches with excavated material unless otherwise noted on the plans. When placing conduit in the sub-base of new roadways, backfill all trenches with cement-stabilized base as per requirements of Items 110 "Excavation", 400 "Excavation and Backfill for Structures", 401 "Flowable Backfill", 402 "Trench Excavation Protection", and 403 "Temporary Special Shoring."

6. Provide and place warning tape approximately 10 in. above all trenched conduit as per Item 618.

7. During construction, temporarily cap or plug open ends of all conduit and raceways immediately after installation to prevent entry of dirt, debris and animals. Temporary caps constructed of durable duct tape are allowed. Tightly fix the tape to the conduit opening. Clean out the conduit and prove it clear in accordance with Item 618 prior to installing any conductors.

8. Ensure conduit entry into the top of any enclosure is waterproof by installing conduit sealing hubs or using boxes with threaded bosses. This includes surface mounted safety switches, meter cans, service enclosures, auxiliary enclosures and junction boxes. Grounding bushings on water tight sealing hubs are not required.

9. Fit the ends of all PVC conduit terminations with bushings or bell end fittings. Provide and install a grounding type bushing on all metal conduit terminations.

10. Install a bonding jumper from each grounding bushing to the nearest ground rod, grounding lug, or equipment grounding conductor. Ensure all bonding jumpers are the same size as the equipment grounding conductor. Bonding of conduit used as a casing under roadways for duct cable is not required, if the duct extends the full length through the casing.

11. At all electrical services, install a 6 AWG solid copper grounding electrode conductor.

12. Place conduits entering ground boxes so that the conduit openings are between 3 in. and 6 in. from the bottom of the box. See the ground box detail on sheet ED(4).

13. Seal ends of all conduits with duct seal, expandable foam, or by other methods approved by the Engineer. Seal conduit immediately after completion of conductor installation and pull tests. Do not use duct tape as a permanent conduit sealant. Do not use silicone caulk as a conduit sealant.

14. File smooth the cut ends of all mounting strut and conduit. Before installing, paint the field cut ends of all mounting strut and RMC (threaded or non-threaded) with zinc rich paint (94% or more zinc content) to alleviate overspray. Use zinc rich paint to touch up galvanized material as allowed under Item 445 "Galvanizing." Do not paint non-galvanized material with a zinc rich paint as an alternative for materials required to be galvanized.

Texas Department of Transportation

Traffic Operations Division Standard

ELECTRICAL DETAILS CONDUITS & NOTES

ED(1)-14

FILE:	ed1-14.dgn	DN:	CK:	DW:	CK:
©TxDOT	October 2014	CONT	SECT	JOB	HIGHWAY
REVISIONS		0101	06	095	US 181
		DIST		COUNTY	SHEET NO.
		CRP		NUECES	148

DATE:
FILE:

71A

DISCLAIMER:
The use of this standard is governed by the "Texas Engineering Practice Act". No warranty of any kind is made by TxDOT for any purpose whatsoever. TxDOT assumes no responsibility for the conversion of this standard to other formats or for incorrect results or damages resulting from its use.

ELECTRICAL CONDUCTORS

A. MATERIAL INFORMATION

1. Provide Type XHHW insulated conductors in accordance with Departmental Material Specification (DMS)11040 "Conductors" and Item 620 "Electrical Conductors." Provide conductors as listed on the Material Producers List (MPL) on the Department web site under "Roadway Illumination and Electrical Supplies" Item 620. Color code insulated conductors in conformance with the NEC. Identify grounded (neutral) conductors with white insulation. Identify grounding conductors (ground wires) with green insulation or bare conductors. Identify ungrounded (hot) conductors with any color insulation except green, white, or gray. Keep color scheme consistent throughout the wiring system. Identify conductors 6 American Wire Gauge (AWG) and smaller by continuous color jacket. Identify electrical conductors 4 AWG and larger by continuous color jacket or by colored tape. When identifying conductors with colored tape, mark at least 6 in. of the conductor's insulation with half laps of tape.

2. Provide a solid copper 6 AWG grounding electrode conductor to bond the electrical service equipment to the concrete encased grounding electrode or the ground rod at the service location. Connect the grounding electrode conductor to the ground rod with a UL listed connector in accordance with DMS 11040. Connect the grounding electrode conductor to the concrete encased grounding electrode as shown in the plans.

3. Where two or more circuits are present in one conduit or enclosure, permanently identify the conductors of each branch circuit by attaching a non-metallic tag around both circuit conductors at each accessible location. Provide tags with two straps, large enough to indicate circuit number, letter, or other identification as shown in the plans. Print circuit identification on the tag with a permanent marker.

4. Use listed compression or screw type pressure connectors, terminal blocks, or split bolt connectors for splicing as specified in DMS 11040. Use hot melt adhesive tape to fill the gap and seal the ends of heat shrink tubing. Provide UL listed gel-filled insulating splice covers. Splicing materials, insulating materials, breakaway disconnects, splice covers, and fuse holders are subsidiary to various bid items.

B. CONSTRUCTION METHODS

1. Use only a flat, high tensile strength polyester fiber pull tape for pulling conductors through the conduit system. After installing conductors in conduit, perform conductor pull test. If a conductor cannot be freely pulled, make any needed alterations or repairs at no additional cost to the department. Perform insulation resistance tests in accordance with Item 620. Coordinate with the Engineer to witness the tests.

2. Leave 2 ft. minimum, 3 ft. maximum length for each conductor up to the splice in ground boxes. Leave 3 ft. minimum, 4 ft. maximum length of conductor in ground boxes when pulled through with no splice. Leave 1 ft. minimum, 1.5 ft. maximum length of conductor at enclosures, weatherheads and pole bases.

3. Make splices only in junction boxes, ground boxes, pole bases, or electrical enclosures and use only listed compression or screw type pressure connectors, terminal blocks, or split bolt connectors. Insulate splices with heavy wall heat shrink tubing or gel-filled insulating splice covers to provide a watertight splice. Overlap conductor insulation with heat shrink tubing a minimum of 2 in. past both sides of the splice. Where heat shrink tubing may not shrink sufficiently to provide a watertight seal around the individual conductors, prior to heating the tubing, increase the diameter of the conductor insulation using hot melt adhesive tape to provide a watertight seal between the individual conductors and the heat shrink tubing. Ensure the tape extends past the heat shrink tubing. Use hot melt adhesive tape to fill the gap and seal the ends of heat shrink tubing. Heat shrink tubing that appears to have been burned, or overheated, is considered defective and must be replaced.

4. Size and install gel-filled insulating splice covers according to manufacturer's specifications when used in place of heat shrink tubing.

5. Wire nuts with factory applied waterproof sealant may be used for 8 AWG or smaller conductors in above ground junction boxes, but not in pole bases or ground boxes. Install wire nuts in an upright position to prevent the accumulation of water.

6. Support conductors in illumination poles with a J-hook at the top of the pole.

7. When terminating conductors, remove the insulation and jacketing material without nicking the individual strands of the conductor. Conductors with nicked individual conductor strands or removed strands will be considered damaged.

8. Replace conductors and cables that are damaged beyond repair or that fail an insulation resistance test at no additional cost to the department.

9. Do not repair damaged conductors with duct tape, electrical tape, or wire nuts. Use only approved splicing methods.

10. Do not terminate more than one conductor under a single connector, unless the connector is rated for multiple conductors. Do not exceed the pressure connector's listing for maximum number and size of conductors allowed.

11. Install breakaway connectors on conductors bid under Item 620 whenever those conductors pass through a breakaway support device. Follow manufacturer's instructions when terminating conductors to breakaway connectors. Properly torque threaded connections. Proper terminations are critical to the safe operation of breakaway devices. Trim waterproofing boots on breakaway connectors to fit snugly around the conductor to ensure waterproof connection. Only one conductor may enter a single opening in a boot. Provide waterproof boots with the correct number of openings. Leave unused openings factory sealed. Use prequalified breakaway connectors as shown on the MPL.

12. Provide and install a separate stranded equipment grounding conductor (EGC) in all conduits that contain circuit wiring of 50 volts or more. Unless shown elsewhere, size the EGC to be the same size as the largest current carrying conductor contained in the conduit. Ensure all EGCs are bonded together at every accessible location. For traffic signal installations, provide a minimum size 8 AWG EGC. The EGC is paid for under Item 620.

C. TEMPORARY WIRING

1. Install temporary conductors and electrical equipment in accordance with the NEC article "Temporary Installations" and Department standard sheets.

2. Provide a ground fault circuit interrupter (GFCI) for power outlets for portable electrical equipment, power tools, ice machines, ice storage bins and refrigerators located outdoors at grade. GFCI may be any one of the following: molded cord and plug set, receptacle, or circuit breaker type.

3. Use listed wire nuts with factory applied sealant for temporary wiring where approved.

4. Enclose conductor splices within a listed enclosure or ground box, or ensure the splices are more than 10 ft. above grade vertically and more than 5 ft. horizontally from any metal structure. Where installing temporary conductors in areas subject to vehicle traffic or mobile construction equipment, ensure the vertical clearance to ground is at least 18 ft. when measured at the lowest point. Ground messenger wires that support power conductors in conformance with the NEC.

5. Protect and when necessary repair any existing electrical conduits uncovered during the construction process in a timely manner and in conformance with the NEC.

GROUND RODS & GROUNDING ELECTRODES

A. MATERIAL INFORMATION

1. Provide and install a grounding electrode at electrical services. Provide ground rods according to DMS 11040 and the plans. Larger diameter or longer length rods may be called for in some specific locations, see the individual plans sheets. Concrete encased grounding electrodes may be called for in specific locations including electrical service, see individual plan sheets.

B. CONSTRUCTION METHODS

1. Furnish auxiliary ground rods for lightning protection and install in soil, concrete, or both, as called for in the plans. For ground rods installed in concrete, ensure the connection of the conductor to the ground rod is readily accessible for inspection or repairs. For ground rods installed in soil, ensure that the upper end is between 2 to 4 in. below finished grade.

2. Do not place ground rods in the same drilled hole as a timber pole.

3. Install ground rods so the imprinted part number is at the upper end of the rod.

4. Remove all non-conductive coatings such as concrete splatter from the rod at the clamp location.

5. Route all conductors as short and straight as possible for connection to lightning protection ground rods. When a bend is required, ensure a minimum radius bend of four inches for these conductors.

6. Unless otherwise called for in the plans, protect grounding electrode conductors with non-metallic conduit. When protecting grounding electrode conductors with metal conduit, provide and install a grounding type bushing and properly sized bonding jumper on each end of the metal conduit.

7. Written authorization is required before installing a ground rod in a horizontal trench for rocky soil or a solid rock bottom.

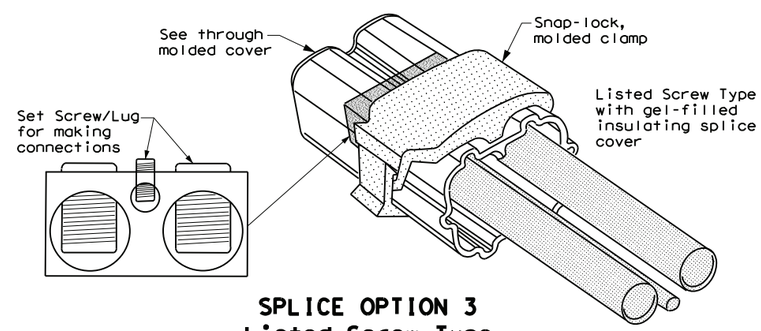

SPLICE OPTION 3
Listed Screw Type

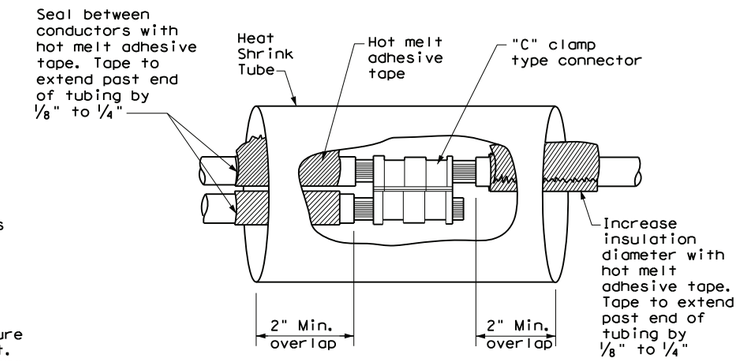

SPLICE OPTION 1
Compression Type

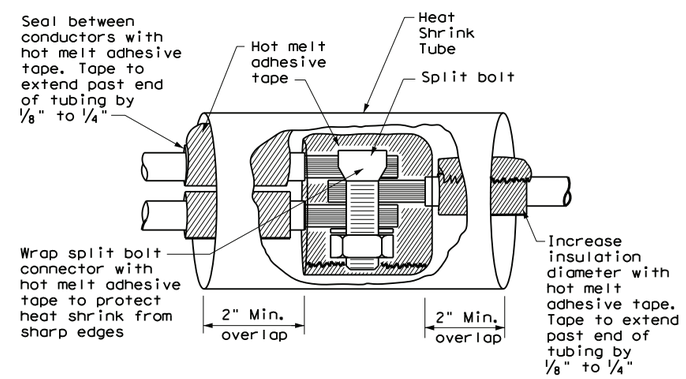

SPLICE OPTION 2
Split Bolt Type

Texas Department of Transportation — Traffic Operations Division Standard

ELECTRICAL DETAILS CONDUCTORS

ED(3)-14

FILE: ed3-14.dgn	DN: TxDOT	CK: TxDOT	DW: TxDOT	CK: TxDOT
© TxDOT October 2014	CONT	SECT	JOB	HIGHWAY
REVISIONS	0101	06	095	US 181
	DIST		COUNTY	SHEET NO.
	CRP		NUECES	149

71C

DATE:
FILE:

DISCLAIMER:
The use of this standard is governed by the "Texas Engineering Practice Act". No warranty of any kind is made by TxDOT for any purpose whatsoever. TxDOT assumes no responsibility for the conversion of this standard to other formats or for incorrect results or damages resulting from its use.

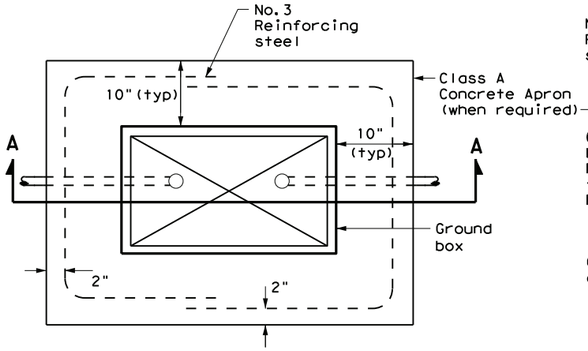

PLAN VIEW

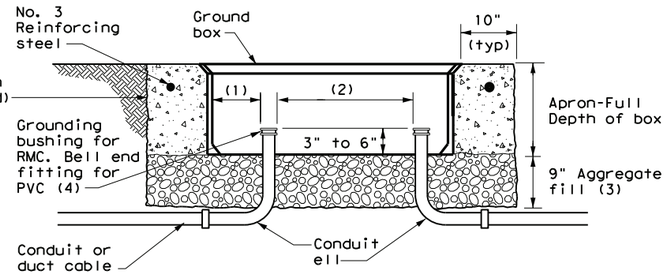

SECTION A - A

APRON FOR GROUND BOX

(1) Uniformly space ends of conduits within the ground box. Position ends of conduits so that ground box walls do not interfere with the installation of grounding bushings or bell end fittings.

(2) Maintain sufficient space between conduits to allow for proper installation of bushing.

(3) Place aggregate under the box, not in the box. Aggregate should not encroach on the interior volume of the box.

(4) Install a grounding bushing on the upper end of all RMC terminating in a ground box. Ground RMC elbows when any part of the elbow is less than 18 in. below the bottom of the ground box. Install a PVC bushing or bell end fitting on the upper end of all PVC conduits terminating in a ground box.

GROUND BOXES

A. MATERIALS

1. Provide polymer concrete ground boxes measuring 16x30x24 in. (WxLxD) or smaller in accordance with Departmental Material Specification (DMS) 11070 "Ground Boxes" and Item 624 "Ground Boxes."

2. Provide Type A, B, C, D, and E ground boxes as shown in the plans, and as listed on the Material Producers List (MPL) on the Department web site under "Roadway Illumination and Electrical Supplies," Item 624.

3. Ensure ground box cover is correctly labeled in accordance with DMS 11070.

4. Provide larger ground boxes in accordance with Item 624 and as shown in the plans.

B. CONSTRUCTION METHODS

1. Remove all gravel and dirt from conduit. Cap all conduits prior to placing aggregate and setting ground box. Provide Grade 3 or 4 coarse aggregate as shown on Table 2 of Item 302 "Aggregates for Surface Treatments." Ensure aggregate bed is in place and at least 9 inches deep, prior to setting the ground box. Install ground box on top of aggregate.

2. Cast ground box aprons in place. Reinforcing steel may be field bent. Ensure the depth of concrete for the apron extends from finished grade to the top of the aggregate bed under the box. Ground box aprons, including concrete and reinforcing steel, are subsidiary to ground boxes when called for by descriptive code.

3. Keep bolt holes in the box clear of dirt. Bolt covers down when not working in ground boxes.

4. Install all conduits and ells in a neat and workmanlike manner. Uniformly space conduits so grounding bushings and bell end fittings can easily be installed.

5. Temporarily seal all conduits in the ground box until conductors are installed.

6. Permanently seal conduits immediately after the completion of conductor installation and pull tests. Permanently seal the ends of all conduits with duct seal, expandable foam, or other method as approved. Do not use duct tape as a permanent conduit sealant. Do not use silicone caulk as a sealant.

7. When a ground rod is present in a ground box, bond all equipment grounding conductors together and to the ground rod with listed connectors.

8. When a type B or D ground box is stacked to meet volume requirements, it is allowable to cut an appropriately sized hole for conduit entry in the side wall at least 18 inches below grade.

9. If an existing ground box in the contract has a metal cover, bond the cover to the equipment grounding conductor with a 3 ft. long stranded bonding jumper the same size as the grounding conductor. The bonding jumper is subsidiary to various bid items. Verify existing ground boxes with metal covers are shown on the plans, with notes fully describing the work required.

10. If other ground boxes with metal covers are within the project limits but are not part of the contract, the Engineer may direct the Contractor to bond the metal covers, identifying the specific boxes in writing. This work will be paid for separately.

11. Bond metal ground box covers to the grounding conductor with a tank ground type lug.

GROUND BOX DIMENSIONS

TYPE	OUTSIDE DIMENSIONS (INCHES) (Width x Length X Depth)
A	12 X 23 X 11
B	12 X 23 X 22
C	16 X 29 X 11
D	16 X 29 X 22
E	12 X 23 X 17

GROUND BOX COVER DIMENSIONS

TYPE	DIMENSIONS (INCHES)							
	H	I	J	K	L	M	N	P
A, B & E	23 1/4	23	13 3/4	13 1/2	9 7/8	5 1/8	1 3/8	2
C & D	30 1/2	30 1/4	17 1/2	17 1/4	13 1/4	6 3/4	1 3/8	2

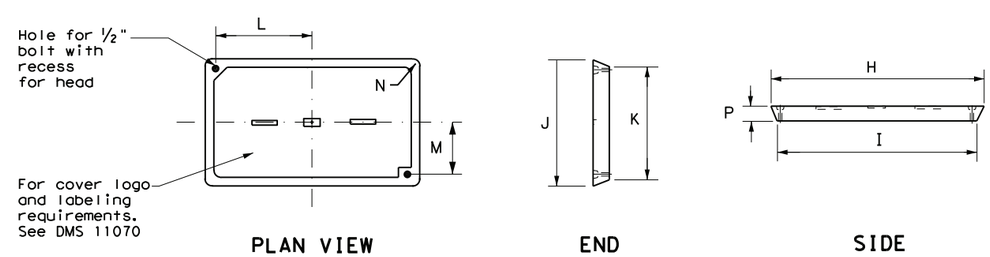

PLAN VIEW END SIDE

GROUND BOX COVER

Texas Department of Transportation

Traffic Operations Division Standard

ELECTRICAL DETAILS GROUND BOXES

ED(4)-14

FILE: ed4-14.dgn	DN: TxDOT	CK: TxDOT	DW: TxDOT	CK: TxDOT
© TxDOT October 2014	CONT	SECT	JOB	HIGHWAY
REVISIONS	0101	06	095	US 181
	DIST		COUNTY	SHEET NO.
	CRP		NUECES	150

71D

DATE:
FILE:

DISCLAIMER:
The use of this standard is governed by the "Texas Engineering Practice Act". No warranty of any kind is made by TxDOT for any purpose whatsoever. TxDOT assumes no responsibility for the conversion of this standard to other formats or for incorrect results or damages resulting from its use.

ELECTRICAL SERVICES NOTES

1. Provide new materials. Ensure installation and materials comply with the applicable provisions of the National Electrical Code (NEC) and National Electrical Manufacturers Association (NEMA) standards. Ensure material is Underwriters Laboratories (UL) listed. Provide and install electrical service conduits, conductors, disconnects, contactors, circuit breaker panels, and branch circuit breakers as shown on the Electrical Service Data chart in the plans. Faulty fabrication or poor workmanship in material, equipment, or installation is justification for rejection. Where manufacturers provide warranties and guarantees as a customary trade practice, furnish these to the State.

2. Provide electrical services in accordance with Electrical Details standard sheets, Departmental Material Specification (DMS) 11080 "Electrical Services,"DMS 11081 "Electrical Services-Type A," DMS 11082 "Electrical Services-Type C," DMS 11083 "Electrical Services-Type D," DMS 11084 "Electrical Services-Type T," DMS 11085 "Electrical Services-Pedestal (PS)", and Item 628 "Electrical Services" of the Standard Specifications. Provide electrical service types A, C, and D, as listed on the Material Producers List (MPL) on the Department web site under "Roadway Illumination and Electrical Supplies," Item 628. Provide other service types as detailed on the plans.

3. Provide all work, materials, services, and any incidentals needed to install a complete electrical service as specified in the plans.

4. Coordinate with the Engineer and the utility provider for metering and compliance with utility requirements. Primary line extensions, connection charges, meter charges, and other charges by the utility company to provide power to the location are paid for in accordance with Item 628. Get approval for the costs associated with these charges prior to engaging the utility company to do the work. Consult with the utility provider to determine costs and requirements, and coordinate the work as approved.

5. The enclosure manufacturer will provide Master Lock Type 2 with brass tumblers keyed #2195 for all custom electrical enclosures. Installing Contractor is to provide Master Lock #2195 Type 2 with brass tumblers for "off the shelf" enclosures. Master Lock #2195 keys and locks become property of the State. Unless otherwise approved, do not energize electrical service equipment until locks are installed.

6. Enclosures with external disconnects that de-energize all equipment inside the enclosure do not need a dead front trim. Protect incoming line terminations from incidental contact as required by the NEC.

7. When galvanized is specified for nuts, screws, bolts or miscellaneous hardware, stainless steel may be used.

8. Provide wiring and electrical components rated for 75°C. Provide red, black, and white colored XHHW service entrance conductors of minimum size 6 American Wire Gauge (AWG). Identify size 6 AWG conductors by continuous color jacket. Identify electrical conductors sized 4 AWG and larger by continuous color jacket or by colored tape. Mark at least 6 inches of the conductor's insulation with half laps of colored tape, when identifying conductors. Ensure each service entrance conductor exits through a separately bushed non-metallic opening in the weatherhead. The lengths of the conductors outside the weatherhead are to be 12 inches minimum, 18 inches maximum, or as required by utility.

9. All electrical service conduit and conductors attached to the electrical service including the riser or the elbow below ground are subsidiary to the electrical service. For an underground utility feed, all service conduit and conductors after the elbow, including service conduit and conductors for the utility pole riser when furnished by the Contractor, will be paid for separately.

10. Provide rigid metal conduit (RMC) for all conduits on service, except for the ½ in. PVC conduit containing the electrical service grounding electrode conductor. Size the service entrance conduit as shown in the plans. Ensure conduit for branch circuit entry to enclosure is the same size as that shown on the layout sheets for branch circuit conduit. Extend all rigid metal conduits a minimum of 6 inches underground and then couple to the type and schedule of the conduit shown on the layout for that particular branch circuit. Install a grounding bushing on the RMC where it terminates in the service enclosure.

11. Use of liquidtight flexible metal conduit (LFMC) is allowed between the meter and service enclosure when they are mounted 90 to 180 degrees to each other. Size the LFMC the same size as service entrance conduit. LFMC must not exceed 3 feet in length. Strap LFMC within 1 foot of each end. LFMC less than 12 inches in length need not be strapped. Each end of LFMC must have a grounding bushing or be terminated with a grounding fitting. The LFMC must contain a grounded (neutral) conductor. Ensure any bend in LFMC never exceeds 180 degrees. A pull test is required on all installed conductors, with at least six inches of free conductor movement demonstrated to the satisfaction of the Engineer.

12. Ensure all mounting hardware and installation details of services conform to utility company specifications.

13. For all electrical service enclosures listed under Item 628 on the MPL, the UL 508 enclosure manufacturers will prepare and submit a schematic drawing unique to each service. Before shipment to the job site, place the applicable laminated schematic drawings and the laminated plan sheet showing the electrical service data chart used to build the enclosure in the enclosure's data pocket. The installing contractor will copy and laminate the actual project plan sheets detailing all equipment and branch circuits supplied by that service. The laminated plan sheets are to be placed in the service enclosure's document pocket. Reduce 11 in. x 17 in. plan sheets to 8 ½ in. x 11 in. before laminating. If the installation differs from the plan sheets, the installing contractor is to redline plan sheets before laminating.

14. When providing an "Off The Shelf" Type D or Type T service, provide laminated plan sheets detailing equipment and branch circuits supplied by that service. Reduce 11 in. x 17 in. plan sheets to 8 ½ in. x 11 in before laminating. Deliver these drawings before completion of the work to the Engineer, instead of placing in enclosure that has no door pocket.

15. Do not install conduit in the back wall of a service enclosure where it would penetrate the equipment mounting panel inside the enclosure. Provide grounding bushings on all metal conduits, and terminate bonding jumpers to grounding bus. Grounding bushings are not required when the end of the metal conduit is fitted with a conduit sealing hub or threaded boss, such as a meter base hub.

SERVICE ASSEMBLY ENCLOSURE

1. Provide threaded hub for all conduit entries into the top of enclosure.

2. Type galvanized steel (GS) enclosures may be used for Type C panelboards and for Type D and T services that do not use an enclosure mounted photocell or lighting contactor. Provide GS enclosures in accordance with DMS 11080, 11082, 11083, and 11084.

3. Provide aluminum (AL) and stainless steel (SS) enclosures for Types A, C, and D in accordance with DMS 11080, 11081, 11082, 11083, and 11084. Do not paint stainless steel.

4. Provide pedestal service (PS) enclosures in accordance with ED(9) and DMS 11080 and 11085. Do not provide GS pedestal services. If GS is shown in the PS descriptive code, provide an AL enclosure.

MAIN DISCONNECT & BRANCH CIRCUIT BREAKERS

1. Field drill flange-mounted remote operator handle if needed, to ensure handle is lockable in both the "On" and "Off" positions.

2. When the utility company provides a transformer larger than 50 KVA, verify that the available fault current is less than the circuit breaker's ampere interrupting capacity (AIC) rating and provide documentation from the electric utility provider to the Engineer.

PHOTOELECTRIC CONTROL

1. Provide photocell as listed on the MPL. Move, adjust, or shield the photocell from stray or ambient night time light to ensure proper operation. Mount photocell facing north when practical. Mount top of pole photocells as shown on Top Mounted Photocell Detail.

* ELECTRICAL SERVICE DATA

Elec. Service ID	Plan Sheet Number	Electrical Service Description	Service Conduit **Size	Service Conductors No./Size	Safety Switch Amps	Main Ckt. Bkr. Pole/Amps	Two-Pole Contractor Amps	Panelbd/ Loadcenter Amp Rating	Branch Circuit ID	Branch Ckt. Bkr. Pole/Amps	Branch Circuit Amps	KVA Load
SB 183	289	ELC SRV TY A 240/480 100(SS)AL(E)SF(U)	2"	3/#2	100	2P/100	100	N/A	Lighting NB	2P/40	26	28.1
									Lighting SB	2P/40	25	
									Underpass	1P/20	15	
NB Access	30	ELC SRV TY D 120/240 060(NS)SS(E)TS(O)	1 ¼"	3/#6	N/A	2P/60		100	Sig. Controller	1P/30	23	5.3
							30		Luminaires	2P/20	9	
									CCTV	1P/20	3	
2nd & Main	58	ELC SRV TY T 120/240 000(NS)GS(N)SP(O)	1 ¼"	3/#6	N/A	N/A	N/A	70	Flashing Beacon 1	1P/20	4	1.0
									Flashing Beacon 2	1P/20	4	

* Example only, not for construction. All new electrical services must have electrical service data chart specific to that service as shown in the plans.

** Verify service conduit size with utility. Size may change due to utility meter requirements. Ensure conduit size meets the National ELectrical Code.

EXPLANATION OF ELECTRICAL SERVICE DESCRIPTIVE CODE

ELEC SERV TY X XXX/XXX XXX (XX) XX (X) XX (X)

Schematic Type

Service Voltage V / V

Disconnect Amp Rating
000 indicates main lug only/
Typically Type T

(SS)= Safety Switch Ahead of Meter-Check with Utility
(NS)= No safety Switch Ahead of Meter-Check with Utility

Enclosure Type
GS= Galvanized steel("off the shelf")
SS= Stainless steel(Custom Enclosure)See MPL
AL= Aluminum (Custom Enclosure)See MPL

Photocell Mounting Location
(E)= Inside Service/Enclosure Mounted
(T)= Top of pole
(L)= Luminaire mounted
(N)= None/No Photocell or Lighting Contactor Required

Service Support Type
GC= Granite concrete
OC= Other concrete
TP= Timber pole
SP= Steel pole
SF= Steel frame
OT= Pole by others or paid for separately
EX= Existing pole
TS= Service on traffic signal pole
PS= Pedestal Service

O= Overhead Service Feed from Utility
U= Underground Service Feed from Utility

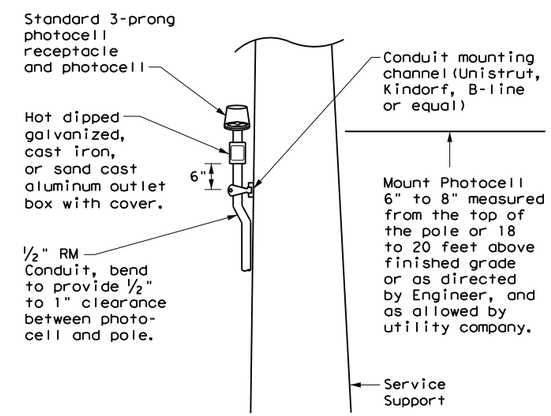

TOP MOUNTED PHOTOCELL

Install conduit strap maximum 3 feet from box. 5 foot maximum spacing between straps supporting conduit.

Texas Department of Transportation — Traffic Operations Division Standard

ELECTRICAL DETAILS SERVICE NOTES & DATA

ED(5)-14

FILE: ed5-14.dgn	DN: TxDOT	CK: TxDOT	DW: TxDOT	CK: TxDOT
© TxDOT October 2014	CONT	SECT	JOB	HIGHWAY
REVISIONS	0101	06	095	US 181
	DIST		COUNTY	SHEET NO.
	CRP		NUECES	151

DATE:
FILE:

71E

DISCLAIMER:
The use of this standard is governed by the "Texas Engineering Practice Act". No warranty of any kind is made by TxDOT for any purpose whatsoever. TxDOT assumes no responsibility for the conversion of this standard to other formats or for incorrect results or damages resulting from its use.

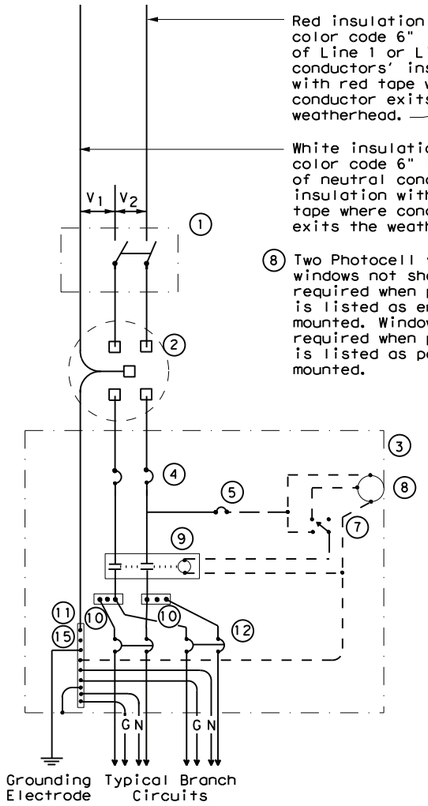

SCHEMATIC TYPE A
THREE WIRE

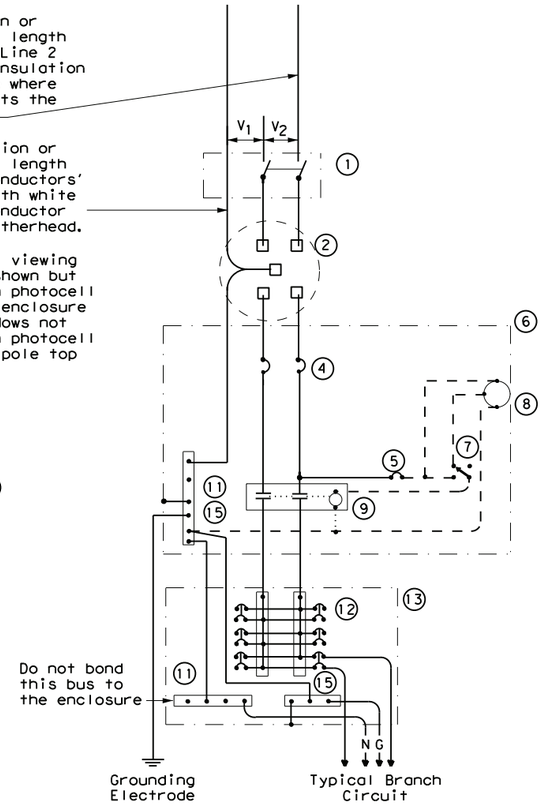

SCHEMATIC TYPE C
THREE WIRE

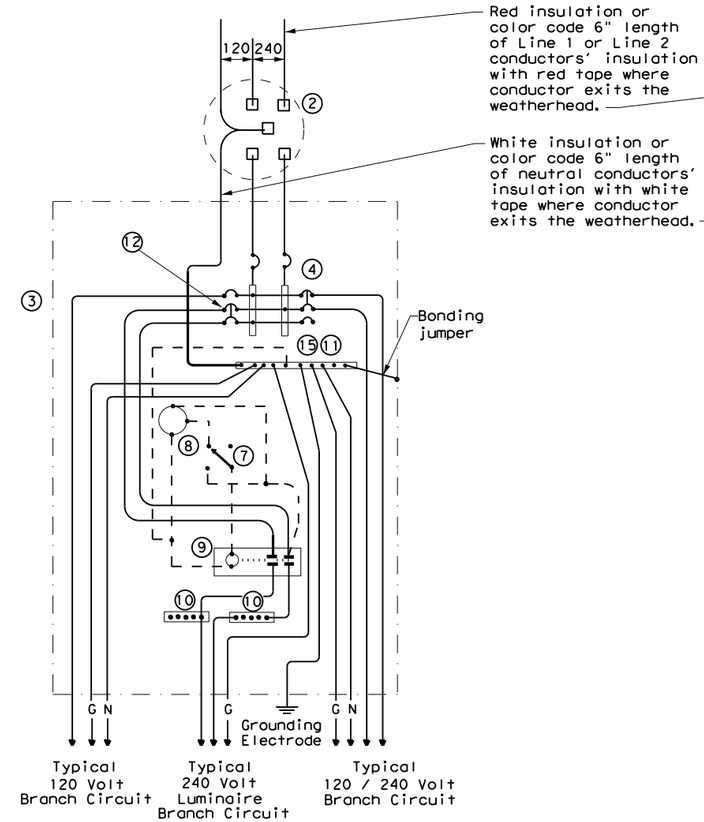

SCHEMATIC TYPE D - CUSTOM
120/240 VOLTS - THREE WIRE

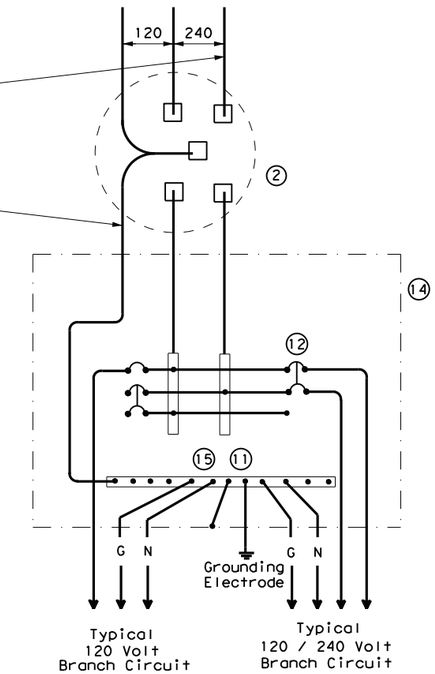

SCHEMATIC TYPE T
120/240 VOLTS - THREE WIRE

Galvanized steel-"Buy Off The Shelf" only. When required install photocell top of the pole or on luminaire only, no lighting contractor will be installed.

WIRING LEGEND

———	Power Wiring
- - - -	Control Wiring
—N—	Neutral Conductor
—G—	Equipment grounding conductor-always required

SCHEMATIC LEGEND

1	Safety Switch (when required)
2	Meter (when required-verify with electric utility provider)
3	Service Assembly Enclosure
4	Main Disconnect Breaker (See Electrical Service Data)
5	Circuit Breaker, 15 Amp (Control Circuit)
6	Auxiliary Enclosure
7	Control Station ("H-O-A" Switch)
8	Photo Electric Control (enclosure-mounted shown)
9	Lighting Contactor
10	Power Distribution Terminal Blocks
11	Neutral Bus
12	Branch Circuit Breaker (See Electrical Service Data)
13	Separate Circuit Breaker Panelboard
14	Load Center
15	Ground Bus

Texas Department of Transportation

Traffic Operations Division Standard

ELECTRICAL DETAILS SERVICE ENCLOSURE AND NOTES

ED(6)-14

FILE: ed6-14.dgn	DN: TxDOT	CK: TxDOT	DW: TxDOT	CK: TxDOT
© TxDOT October 2014	CONT	SECT	JOB	HIGHWAY
REVISIONS	0101	06	095	US 181
	DIST	COUNTY		SHEET NO.
	CRP	NUECES		152

DATE:
FILE:

71F

ROADWAY ILLUMINATION ASSEMBLY NOTES

1. Details apply to roadway lighting installations bid or referenced under Item 610, "Roadway Illumination Assemblies." Provide, furnish, and install all other materials not shown on the plans which may be necessary for complete and proper construction. Where manufacturers provide warranties or guarantees as a customary trade practice, furnish to the State such warranties or guarantees.

2. The locations of poles and fixtures may be shifted by the Engineer to accommodate local conditions. Install or remove poles and luminaires located near overhead electrical lines using established industry and utility safety practices and in accordance with laws governing such work. Consult with the appropriate utility company prior to beginning such work.

3. Provide new and unused materials. Ensure that all materials and installations comply with the applicable articles of the National Electrical Code (NEC),TxDOT standards and specifications, National Electrical Manufacturers Association (NEMA),and are listed by Underwriters Laboratories (UL) or a Nationally Recognized Testing Lab (NRTL). NRTLs such as Canadian Standard Association, Intertek Testing Services NA Inc., or FM Approvals LLC can be considered equivalent to UL. Faulty fabrication or poor workmanship in any material, equipment, or installation is justification for rejection.

4. Provide Roadway Illumination Light Fixtures as per TxDOT Departmental Material Specification (DMS) 11010, Item 610, and as shown on the Material Producers List (MPL) for Roadway Illumination and Electrical Supplies.

5. Fabricate steel roadway illumination poles in accordance with Roadway Illumination Poles (RIP) standards and Item 610. Poles fabricated according to RIP standards do not require shop drawing submittals.

   a. Alternate designs to RIP standards or the use of aluminum to fabricate poles will require the submission of shop drawings electronically. For instructions on submitting shop drawings electronically see "Guide to Electronic Shop Drawing Submittal" on the TxDOT web site.

   b. Limitations on use of the RIP standard: The RIP standard details were developed for installations in locations where the 3-second gust basic maximum wind speed is 110 mph, and where the elevation of the base of the pole is less than (i.e. not more than) 25' above the elevation of the surrounding terrain, in accordance with the "AASHTO Standard Specifications for Structural Supports for Highway Signs, Luminaires and Traffic Signals," 6th Edition (2013) of the AASHTO Design Specifications. For poles to be installed in regions where the maximum basic wind speed exceeds 110 mph or to be mounted more than 25' above the surrounding terrain, provide poles meeting the following requirements:

      i. Submittals. Following the electronic shop drawing submittal process (see Guide to Electronic Shop Drawing Submittal on the TxDOT web site), submit to the Engineer for approval fabrication drawings and calculations for the poles, sealed by a Texas licensed professional engineer (P.E.).

      ii. Luminaire Structural Support Requirements. Provide light poles, arms, and anchor bolt assemblies with a 25 year design life to safely resist dead loads, ice loads and the required basic wind speeds at the location of installation in accordance with the 6th edition (2013) of the AASHTO Design Specifications. For transformer base poles, include transformer base and connecting hardware in calculations and shop drawing submittals. Structurally test all transformer bases to resist the theoretical plastic moment capacity of the pole. Submit certification of the plastic moment load test and FHWA breakaway requirement test of the model of base being furnished with the shop drawings. Show breakaway base model number, manufacturer's name, and logo on shop drawings. Include on manufacturer's shop drawings the ASTM designations for all materials to be used.

6. For both transformer and shoe-base type illumination poles, provide and install double-pole breakaway fuse holders as specified by DMS-11040. Breakaway fuse holders are listed on the MPL for Roadway Illumination and Electrical Supplies under Items 610 & 620. Provide 10 amp time delay fuses for breakaway connectors in light poles, or inside the light fixture for underpass luminaires. In each pole, connect luminaires to the breakaway connector with continuous stranded 12 AWG copper conductors as listed on the MPL. Bond all equipment grounding conductors together and to the ground lug in the transformer base or hand hole.

7. Tighten anchor bolts for shoe base, concrete traffic barrier base, and bridge mount roadway illumination poles, in accordance with Item 449.

8. Install T-Base with following procedure:

   a. Anchor Bolt Tightening.

      i. Coat the threads of the anchor bolts with electrically conductive lubricant.

      ii. Place the T-base over the anchor bolts. Foundation must be level and flat. The maximum permissible gap under any one corner of the t-base is 1/8" before nuts are tightened.

      iii. Coat the bearing surfaces of the nuts and washers with electrically conductive lubricant. Install (1) 1/2" hold down washer, (1) lock washer, and (1) nut on each anchor bolt. Turn the nuts onto the bolts so that each is hand-tight against the washer.

      iv. Using a torque wrench, tighten each nut to 150 ft-lb. Uniform contact is required between the foundation and the T-base in the corner regions of the T-base, and all corner gaps must be closed after applying torque. If a gap still exists after torquing to 150 ft-lbs, continue torquing each bolt incrementally until gap is closed or maximum allowable torque of 250 ft. pound is reached, whichever comes first. If 250 ft-lbs is not enough to close the gap the foundation must be leveled. Gaps along the straight sides of the T-bases and the foundation are permissible. Ensure that no high point of contact occurs between the straight sides of the T-base and the foundation.

      v. Check top of T-base for level. If not level then foundation must be leveled.

   b. Top Bolt Procedure

      i. Erect pole over T-base with crane. Coat bolts, nuts, washers, and lock washers with electrically conductive lubricant.

      ii. Install bolts and 1/2" connecting washers from the inside of the T-base, thread up through the pole base. Install flat washers, lock washers and nuts snug tight according to Item 447, "Structural Bolting."

      iii. Tighten each nut to 150 ft-lb. using a torque wrench.

   c. Level and Plumb

      i. Ensure pole is plumb and mast arm is perpendicular to the roadway according to plans to within 5 degrees.

9. Construct luminaire pole foundations in accordance with Item 416, "Drilled Shaft Foundations," and TxDOT standard sheet RID(2).

10. Provide and install underpass luminaires in accordance with Item 610, DMS-11010, and TxDOT standard sheet RID(3). Typical luminaire size for underpass luminaires is 150W HPS or 150W EQ LED.

11. Mount luminaires on arms level as shown by the luminaire level indicator.

12. Orient luminaires perpendicular to the roadway intended to be lit unless otherwise shown on the plans.

Wiring Diagram Notes:

① Use 1/2 in.-13 UNC threaded, copper or tin-plated copper, pole bonding connector, sized appropriately for conductors, bonded to T-base, or use ground lug in handhole as available.

② Use pre-qualified two-pole breakaway connectors for all luminaire pole installations. For luminaires fed by a circuit with a neutral conductor, use double pole breakaway connectors with the neutral side unfused and marked white.

③ Split Bolt or other connector.

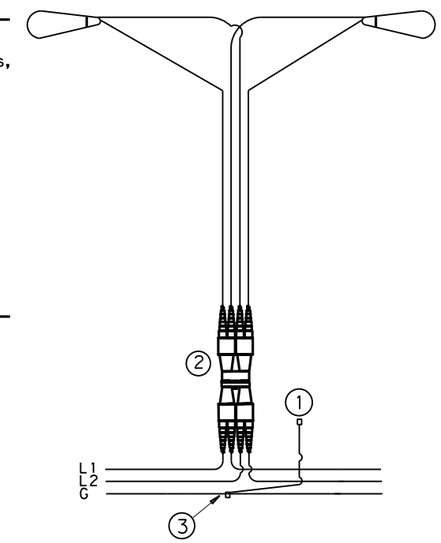

L1,L2 = Hot Conductors
G = Grounding Conductor

TYPICAL WIRING DIAGRAM

LUMINAIRES SERVED AT 480V ON 240/480 VOLT SERVICE OR LUMINAIRES SERVED AT 240V FOR 120/240 VOLT SERVICE.

Decorative LED Lighting Notes:

1. LED Drivers in Remote Outdoor enclosures (for drivers that do not include an enclosure as part of a factory assembly):

   a. Provide NEMA 3R outdoor enclosure or as approved.

   b. Install enclosure at least 12" above ground or other horizontal surface. Mount vertically or on ceiling, and avoid direct sun where possible.

   c. Install drivers with at least 2 inches of space from enclosure walls.

   d. For multiple drivers in an enclosure, provide at least 4 inches side to side and 1 inch end to end from other drivers or electronic equipment

   e. For drivers mounted on back wall of enclosure, mount enclosure on 1 5/8" strut or other standoff to dissipate heat, or mount driver to side of the enclosure or to the metal cover.

   f. Provide remote drivers with a maximum of 100 watts

   g. Provide drivers with documentation of 100,000 hr lifetime at Tcase of 65C or higher.

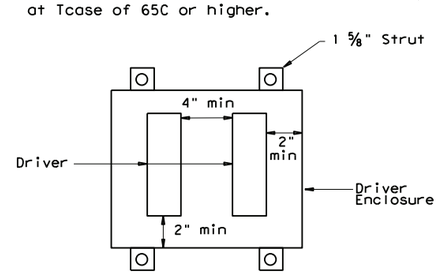

Driver Spacing In Remote Enclosure

Texas Department of Transportation

Traffic Safety Division Standard

ROADWAY ILLUMINATION DETAILS

RID(1)-20

FILE: rid1-20.dgn	DN:	CK:	DW:	CK:
©TxDOT January 2007	CONT	SECT	JOB	HIGHWAY
REVISIONS	0101	06	095	US 181
7-17	DIST		COUNTY	SHEET NO.
12-20	CRP		NUECES	153

72A

DISCLAIMER:
The use of this standard is governed by the "Texas Engineering Practice Act". No warranty of any kind is made by TxDOT for any purpose whatsoever. TxDOT assumes no responsibility for the conversion of this standard to other formats or for incorrect results or damages resulting from its use.

DATE:
FILE:

DISCLAIMER:
The use of this standard is governed by the "Texas Engineering Practice Act". No warranty of any kind is made by TxDOT for any purpose whatsoever. TxDOT assumes no responsibility for the conversion of this standard to other formats or for incorrect results or damages resulting from its use.

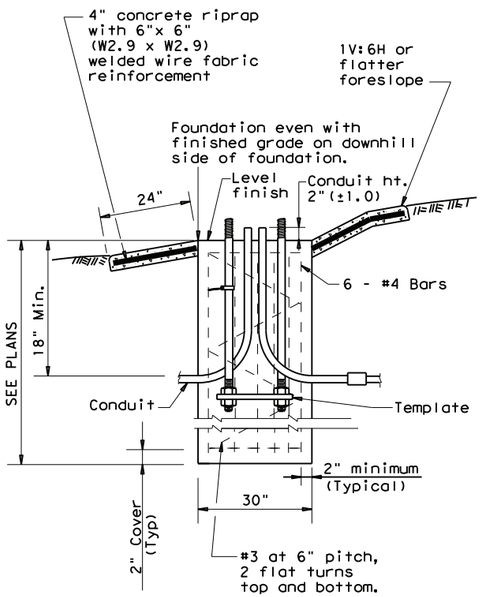

SECTION A-A
SHOWING SLOPED GRADE

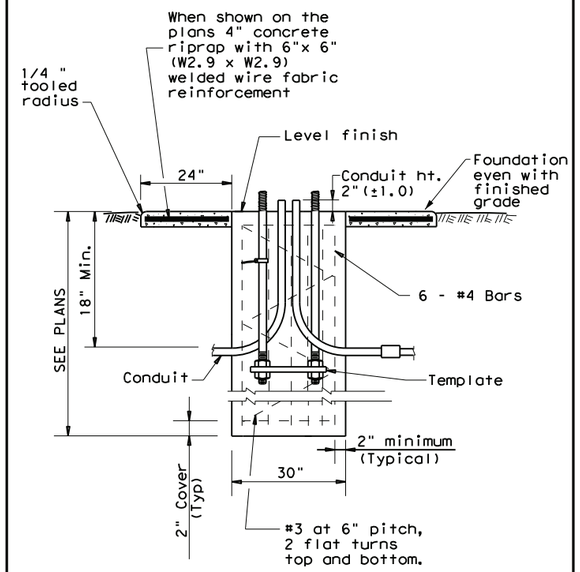

SECTION A-A
SHOWING CONSTANT GRADE

TABLE 1
ANCHOR BOLTS

POLE MOUNTING HEIGHT	BOLT CIRCLE		ANCHOR BOLT SIZE
	Shoe Base	T-Base	
<40 ft.	13 in.	14 in.	1in.x 30in.
40-50 ft.	15 in.	17 1/4in.	1 1/4in. x 30in.

TABLE 2
RECOMMENDED FOUNDATION LENGTHS
(See note 1)

MOUNTING HEIGHT	TEXAS CONE PENETROMETER N Blows/ft		
	10	15	40
≤20 ft.	6′	6′	6′
>20 ft. to 30 ft.	8′	6′	6′
>30 ft. to 40 ft.	8′	8′	6′
>40 ft. to 50 ft.	10′	8′	6′

TABLE 3
PAY QUANTITY OF RIPRAP PER FOUNDATION (Install only when shown on the plans)

Foundation Diameter	RIPRAP DIAMETER	RIPRAP (CONC) (CL B)
30 in.	78 in.	0.35 CY

GENERAL NOTES:

1. "Recommended Foundation Lengths" table is for information purposes only. Foundation lengths shall be as shown on the plans, or as directed by the Engineer. Foundations will be paid for under Item 416, "Drilled Shaft Foundations," unless otherwise shown on the plans.
2. Erect roadway illumination assembly poles plumb and true. Form and level the top 6" of the foundation so the pole will be plumb. Use leveling nuts to plumb shoe base poles. Do not use shims or leveling nuts under transformer bases. Do not grout between baseplate and the foundation.
3. Ensure Class 2A and 2B fit for anchor bolts and nuts. Tap and chase nuts after galvanizing. Anchor bolt body with rolled threads need not be full size.
4. Use appropriate class of concrete as specified in Items 416 and 432. Concrete for riprap may be upgraded to Class C at no extra cost to the Department.
5. Place riprap around the foundation when called for elsewhere in the plans. Riprap will be paid for under Item 432.
6. Locate breakaway roadway illumination assemblies as shown in the placement table, unless otherwise dimensioned on the plans. Protect non-breakaway illumination assemblies from vehicular impact (i.e. 2.5 ft. behind guard rail or mounted on traffic barrier), or located outside the clear zone, except that 2.5 ft. from curb face is minimum desired for light poles on city streets, 45 mph or less. See Roadway Design Manual for further information.
7. Use 4 hold down and 4 connecting washers on transformer base poles as recommended by the manufacturer and supplied with base.
8. Install a minimum of 2 conduits in each foundation. See lighting layout sheets for locations of foundations with more than 2 conduits. Cap unused conduits in foundations on both ends.
9. Conduit location in foundations is critical for breakaway devices. Place conduits 2 in. apart on centerline as shown.
10. Bond anchor bolt to rebar cage with #6 bare stranded copper conductor. Use listed mechanical connectors rated for embedment in concrete. The bonded steel in the foundation creates a concrete encased grounding electrode which replaces the ground rod.
11. Grade earthwork around T-base foundations even with the finished grade as shown in Section A-A to ensure proper function of the breakaway device. Use riprap on T-base foundations that are located on sloped grades, and as shown on the plans for level grades.

TABLE 4
BREAKAWAY POLE PLACEMENT (See note 6)

ROADWAY FUNCTIONAL CLASSIFICATION	** POLE OFFSET (DISTANCE TO FACE OF TRANSFORMER BASE)
Freeway Mainlanes (roadway with full control of access)	15 ft. (minimum and typical) from lane edge
All curbed, 45 mph or less design speed	2.5 ft. minimum (15 ft. desirable) from curb face
All others	10 ft. minimum*(15 ft. desirable) from lane edge

* or as close to ROW line as is practical

** provide 2/5 of the luminaire mounting height behind the pole for "falling area" to prevent encroachment on the other travel lanes. See design guidelines.

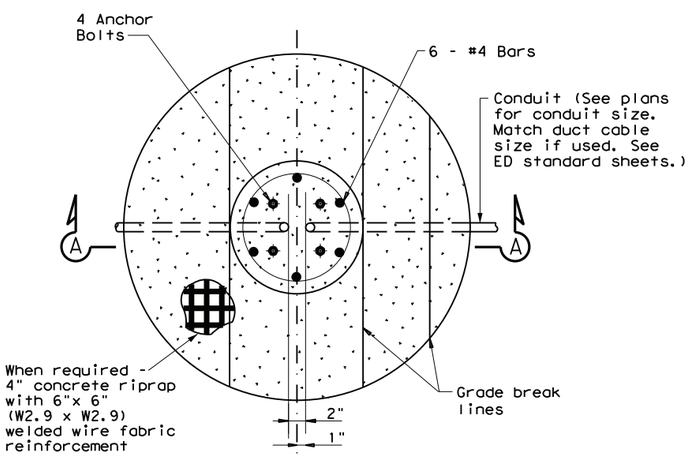

FOUNDATION DETAIL

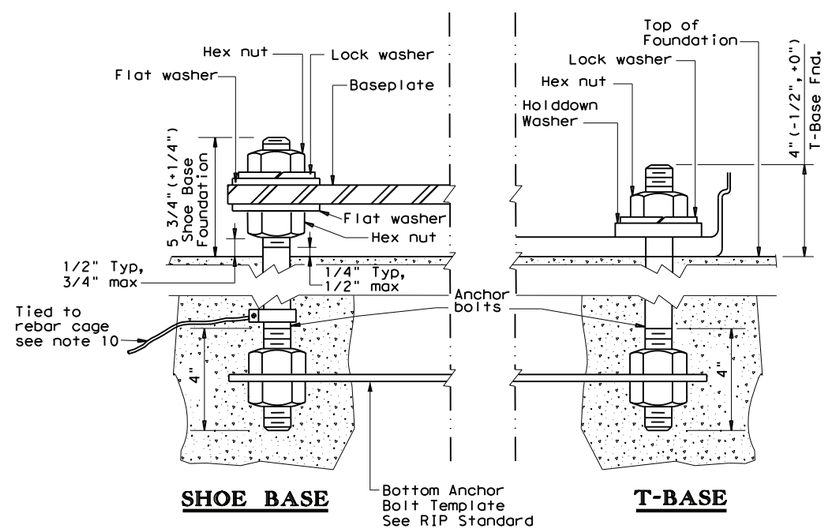

SHOE BASE

T-BASE

ANCHOR BOLT DETAIL

Texas Department of Transportation

Traffic Safety Division Standard

ROADWAY ILLUMINATION DETAILS
(RDWY ILLUM FOUNDATIONS)
RID(2)-20

FILE: rid2-20.dgn	DN:	CK:	DW:	CK:
© TxDOT January 2007	CONT	SECT	JOB	HIGHWAY
REVISIONS	0101	06	095	US 181
1-11	DIST		COUNTY	SHEET NO.
7-17	CRP		NUECES	154
12-20				

72B

DATE:
FILE:

DISCLAIMER:
The use of this standard is governed by the "Texas Engineering Practice Act". No warranty of any kind is made by TxDOT for any purpose whatsoever. TxDOT assumes no responsibility for the conversion of this standard to other formats or for incorrect results or damages resulting from its use.

TYPE 1

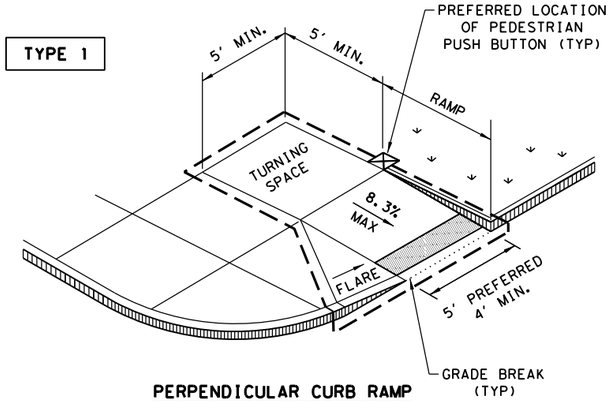

PERPENDICULAR CURB RAMP

TYPE 2

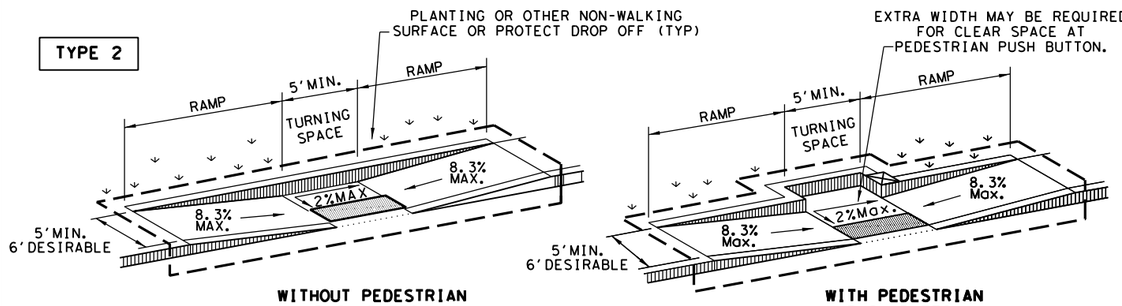

WITHOUT PEDESTRIAN PUSH BUTTON

WITH PEDESTRIAN PUSH BUTTON

PARALLEL CURB RAMP

TYPE 3

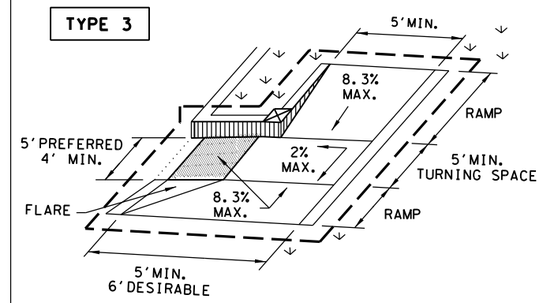

TYPE 6

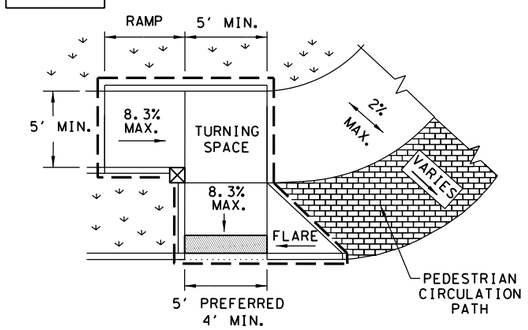

COMBINATION CURB RAMPS

TYPE 20

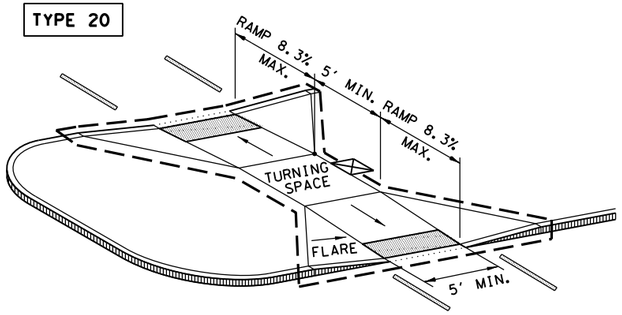

CURB RAMPS AT MEDIAN ISLANDS

TYPE 7

(SIDEWALK SET BACK FROM CURB)

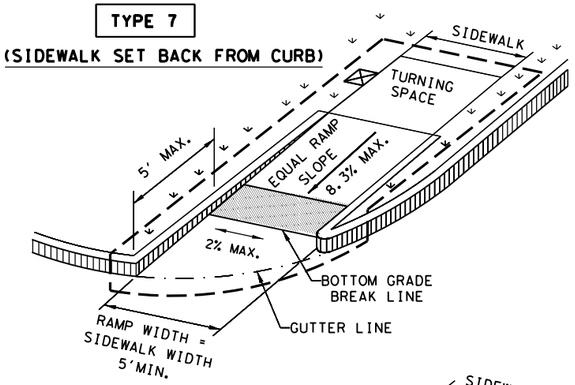

CROSS SLOPE NOT TO EXCEED 2% ON ANY PORTION OF RAMP, TURNING SPACE OR TRANSITION TO STREET.

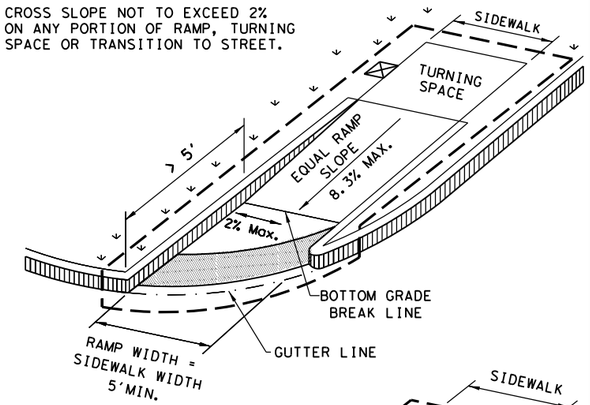

TYPE 10

(SIDEWALK ADJACENT TO CURB)

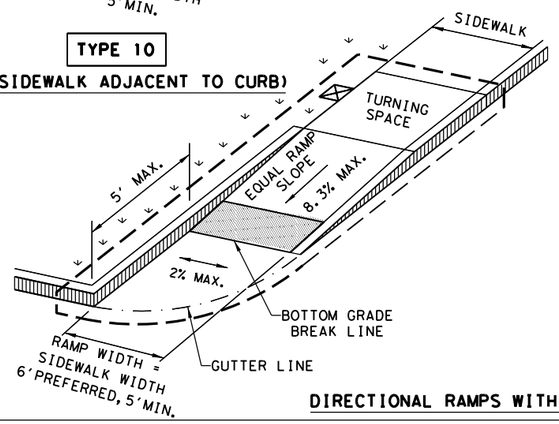

CROSS SLOPE NOT TO EXCEED 2% ON ANY PORTION OF RAMP, TURNING SPACE OR TRANSITION TO STREET.

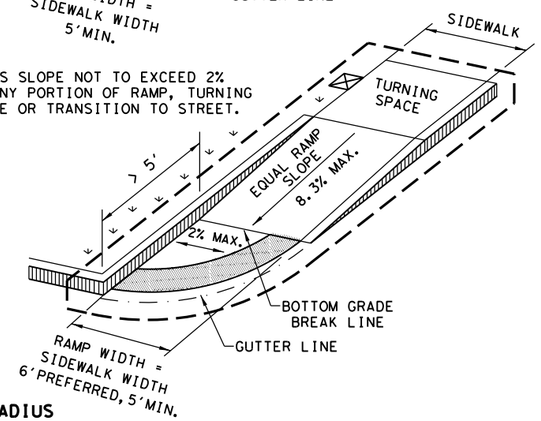

DIRECTIONAL RAMPS WITHIN RADIUS

TYPE 5

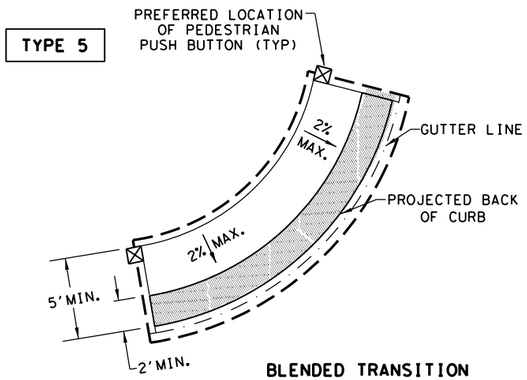

BLENDED TRANSITION
(FLUSH LANDING)

TYPE 21

INSTALL DETECTABLE WARNING SURFACE AT EACH END OF THE CUT-THROUGH RAMP WITH A MINIMUM 2' USUAL SIDEWALK SURFACE BETWEEN. IF MEDIAN IS LESS THAN 6' WIDE, ELIMINATE DETECTABLE WARNING SURFACES.

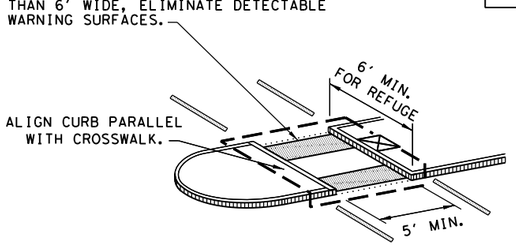

NOTE: CURB DETAILS ARE SHOWN ELSEWHERE IN THE PLANS.

TYPE 22

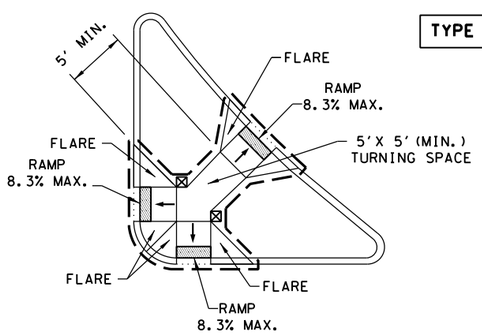

COMBINATION ISLAND RAMPS

BOTTOM GRADE BREAK OF CURB RAMP WILL NORMALLY BE AT GUTTER LINE. SURFACE SLOPES AT GRADE BREAKS SHALL BE FLUSH.

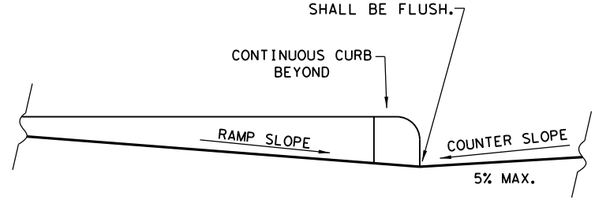

TYPICAL SECTION OF PERPENDICULAR CURB RAMP AT CONNECTION TO ROADWAY

NOTES / LEGEND:

SEE GENERAL NOTES ON SHEET 2 OF 4 FOR MORE INFORMATION.

DENOTES PLANTING OR NON-WALKING SURFACE NOT PART OF PEDESTRIAN CIRCULATION PATH.

GUTTER LINE

DETECTABLE WARNING SURFACE

GRADE BREAK

DENOTES PREFERRED LOCATION OF PEDESTRIAN PUSH BUTTON IF APPLICABLE.

RAMP LIMITS OF PAYMENT

SHEET 1 OF 4

Texas Department of Transportation

Design Division Standard

PEDESTRIAN FACILITIES CURB RAMPS

PED-18

FILE: ped18	DN: TxDOT	DW: VP	CK: KM	CK: PK & JG
© TxDOT: MARCH, 2002	CONT	SECT	JOB	HIGHWAY
REVISIONS	0101	06	095	US-181
REVISED 08, 2005 REVISED 06, 2012 REVISED 01, 2018	DIST	COUNTY		SHEET NO.
	CRP	NUECUES		155

DATE:
FILE:

DISCLAIMER:
The use of this standard is governed by the "Texas Engineering Practice Act". No warranty of any kind is made by TxDOT for any purpose whatsoever. TxDOT assumes no responsibility for the conversion of this standard to other formats or for incorrect results or damages resulting from its use.

GENERAL NOTES

CURB RAMPS

1. Install a curb ramp or blended transition at each pedestrian street crossing.
2. All slopes shown are maximum allowable. Cross slopes of 1.5% and lesser running should be used. Adjust curb ramp length or grade of approach sidewalks as directed.
3. Maximum allowable cross slope on sidewalk and curb ramp surfaces is 2%.
4. The minimum sidewalk width is 5'. Where the sidewalk is adjacent to the back of curb, a 6' sidewalk width is desirable. Where a 5' sidewalk cannot be provided due to site constraints, sidewalk width may be reduced to 4' for short distances. 5'x 5' passing areas at intervals not to exceed 200' are required.
5. Turning Spaces shall be 5'x 5' minimum. Cross slope shall be maximum 2%.
6. Clear space at the bottom of curb ramps shall be a minimum of 4'x 4' wholly contained within the crosswalk and wholly outside the parallel vehicular travel path.
7. Provide flared sides where the pedestrian circulation path crosses the curb ramp. Flared sides shall be sloped at 10% maximum, measured parallel to the curb. Returned curbs may be used only where pedestrians would not normally walk across the ramp, either because the adjacent surface is planted, substantially obstructed, or otherwise protected.
8. Additional information on curb ramp location, design, light reflective value and texture may be found in the latest draft of the Proposed Guidelines for Pedestrian Facilities in the Public Right of Way (PROWAG) as published by the U.S. Architectural and Transportation Barriers Compliance Board (Access Board).
9. To serve as a pedestrian refuge area, the median should be a minimum of 6' wide, measured from back of curbs. Medians should be designed to provide accessible passage over or through them.
10. Small channelization islands, which do not provide a minimum 5'x 5' landing at the top of curb ramps, shall be cut through level with the surface of the street.
11. Crosswalk dimensions, crosswalk markings and stop bar locations shall be as shown elsewhere in the plans. At intersections where crosswalk markings are not required, curb ramps shall align with theoretical crosswalks unless otherwise directed.
12. Provide curb ramps to connect the pedestrian access route at each pedestrian street crossing. Handrails are not required on curb ramps.
13. Curb ramps and landings shall be constructed and paid for in accordance with Item 531 "Sidewalks".
14. Place concrete at a minimum depth of 5" for ramps, flares and landings, unless otherwise directed.
15. Furnish and install No. 3 reinforcing steel bars at 18" o.c. both ways, unless otherwise directed.
16. Provide a smooth transition where the curb ramps connect to the street.
17. Curbs shown on sheet 1 within the limits of payment are considered part of the curb ramp for payment, whether it is concrete curb, gutter, or combined curb and gutter.
18. Existing features that comply with applicalble standards may remain in place unless otherwise shown on the plans.

DETECTABLE WARNING MATERIAL

19. Curb ramps must contain a detectable warning surface that consists of raised truncated domes complying with PROWAG. The surface must contrast visually with adjoining surfaces, including side flares. Furnish and install an approved cast-in-place dark brown or dark red detectable warning surface material adjacent to uncolored concrete, unless specified elsewhere in the plans.
20. Detectable Warning Materials must meet TxDOT Departmental Materials Specification DMS 4350 and be listed on the Material Producer List. Install products in accordance with manufacturer's specifications.
21. Detectable warning surfaces must be firm, stable and slip resistant.
22. Detectable warning surfaces shall be a minimum of 24 inches in depth in the direction of pedestrian travel, and extend the full width of the curb ramp or landing where the pedestrian access route enters the street.
23. Detectable warning surfaces shall be located so that the edge nearest the curb line is at the back of curb and neither end of that edge is greater than 5 feet from the back of curb. Detectable warning surfaces may be curved along the corner radius.
24. Shaded areas on Sheet 1 of 4 indicate the approximate location for the detectable warning surface for each curb ramp type.

DETECTABLE WARNING PAVERS (IF USED)

25. Furnish detectable warning paver units meeting all requirements of ASTM C-936, C-33. Lay in a two by two unit basket weave pattern or as directed.
26. Lay full-size units first followed by closure units consisting of at least 25 percent (25%) of a full unit. Cut detectable warning paver units using a power saw.

SIDEWALKS

27. Provide clear ground space at operable parts, including pedestrian push buttons. Operable parts shall be placed within unobstructed reach range specified in PROWAG section R406.
28. Place traffic signal or illumination poles, ground boxes, controller boxes, signs, drainage facilities and other items so as not to obstruct the pedestrian access route or clear ground space.
29. Street grades and cross slopes shall be as shown elsewhere in the plans.
30. Changes in level greater than 1/4 inch are not permitted.
31. The least possible grade should be used to maximize accessibility. The running slope of sidewalks and crosswalks within the public right of way may follow the grade of the parallel roadway. Where a continuous grade greater than five percent (5%) must be provided, handrails may be desirable to improve accessibility. Handrails may also be needed to protect pedestrians from potentially hazardous conditions. If provided, handrails shall comply with PROWAG R409.
32. Handrail extensions shall not protrude into the usable landing area or into intersecting pedestrian routes.
33. Driveways and turnouts shall be constructed and paid for in accordance with Item "Intersections, Driveways and Turnouts". Sidewalks shall be constructed and paid for in accordance with Item, "Sidewalks".
34. Sidewalk details are shown elsewhere in the plans.

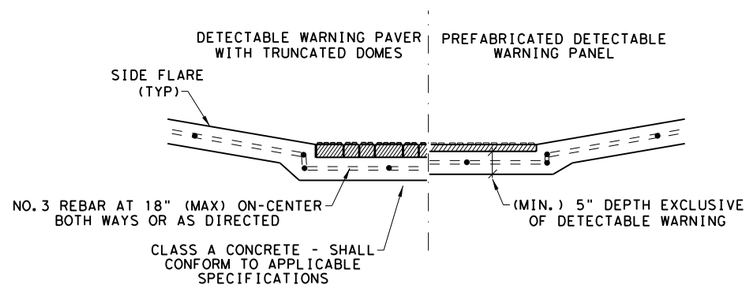

SECTION VIEW DETAIL

CURB RAMP AT DETECTIBLE WARNINGS

DETECTABLE WARNING SURFACE DETAILS

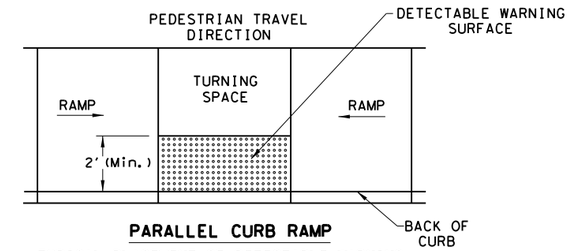

PARALLEL CURB RAMP

TYPICAL PLACEMENT OF DETECTABLE WARNING SURFACE ON LANDING AT STREET EDGE.

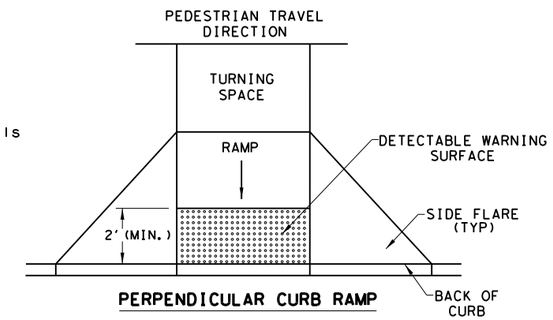

PERPENDICULAR CURB RAMP

TYPICAL PLACEMENT OF DETECTABLE WARNING SURFACE ON SLOPING RAMP RUN.

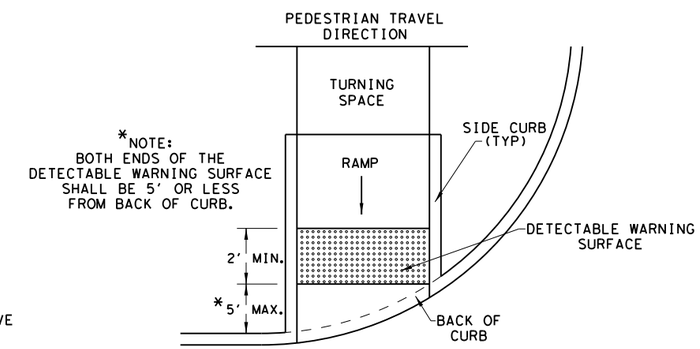

DIRECTIONAL CURB RAMP

TYPICAL PLACEMENT OF DETECTABLE WARNING SURFACE ON SLOPING RAMP RUN.

SHEET 2 OF 4

Texas Department of Transportation — Design Division Standard

PEDESTRIAN FACILITIES CURB RAMPS

PED-18

FILE: ped18	DN: TxDOT	DW: VP	CK: KM	CK: PK & JG
© TxDOT: MARCH, 2002	CONT	SECT	JOB	HIGHWAY
REVISIONS	0101	06	095	US-181
REVISED 08,2005 REVISED 06,2012 REVISED 01,2018	DIST		COUNTY	SHEET NO.
	CRP		NUECES	156

DATE:
FILE:

DISCLAIMER:
The use of this standard is governed by the "Texas Engineering Practice Act". No warranty of any kind is made by TxDOT for any purpose whatsoever. TxDOT assumes no responsibility for the conversion of this standard to other formats or for incorrect results or damages resulting from its use.

SIDEWALK TREATMENT AT DRIVEWAYS

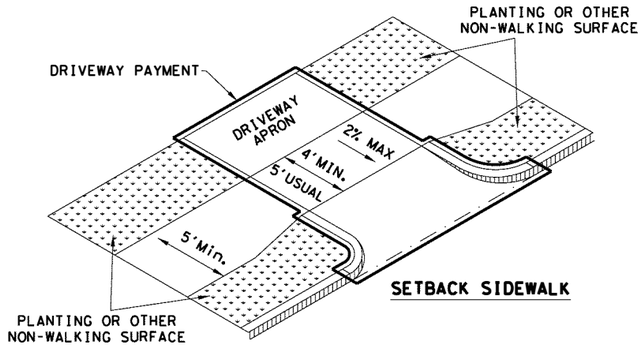

SETBACK SIDEWALK

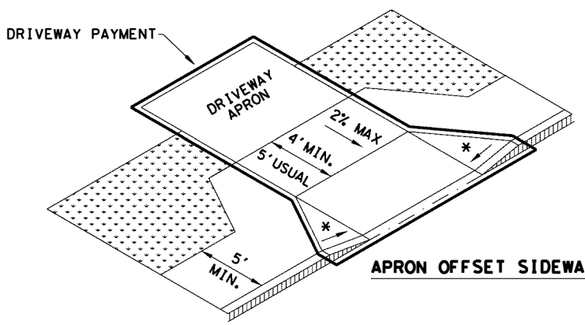

APRON OFFSET SIDEWALK

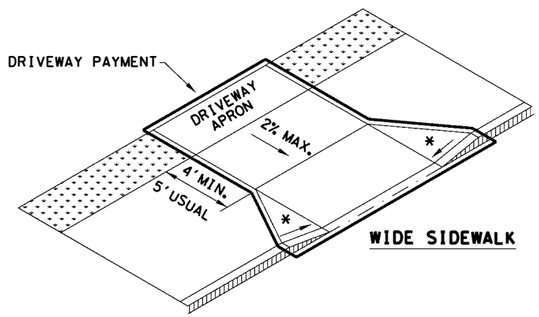

WIDE SIDEWALK

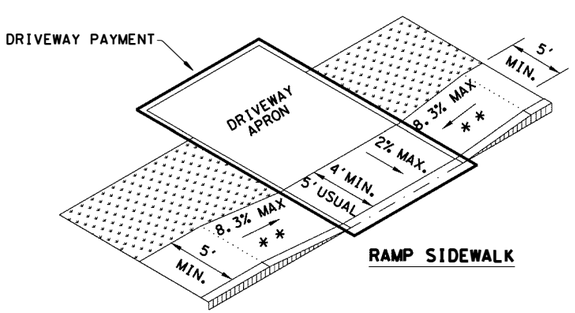

RAMP SIDEWALK

NOTES:

* WHERE DRIVEWAYS CROSS THE PEDESTRIAN ROUTE, SIDES SHALL BE FLARED AT 10% MAX SLOPE.

* * IF CURB HEIGHT IS GREATER THAN 6 INCHES, USE GRADE LESS THAN OR EQUAL TO 5%. HANDRAIL AND DETECTABLE WARNING ARE NOT REQUIRED.

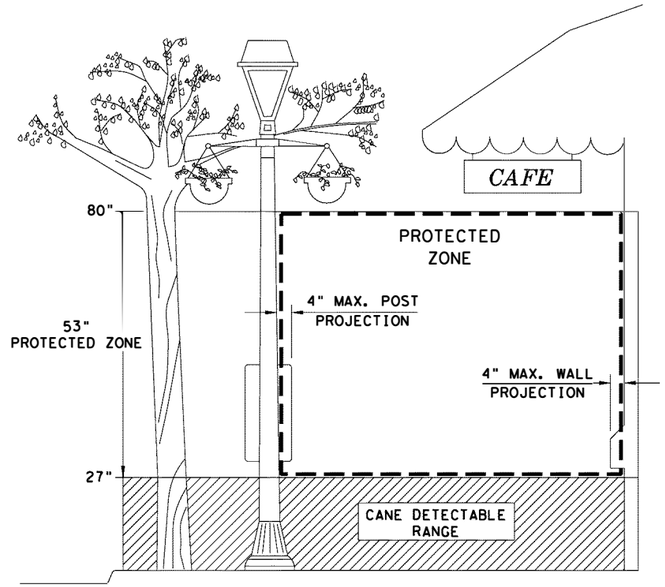

PROTECTED ZONE

NOTE: IN PEDESTRIAN CIRCULATION AREA, MAXIMUM 4" PROJECTION FOR POST OR WALL MOUNTED OBJECTS BETWEEN 27" AND 80" ABOVE THE SURFACE.

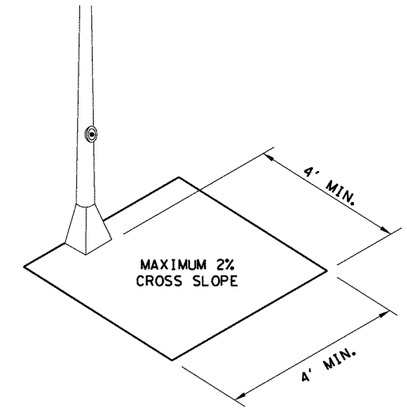

CLEAR SPACE ADJACENT TO PEDESTRIAN PUSH BUTTON

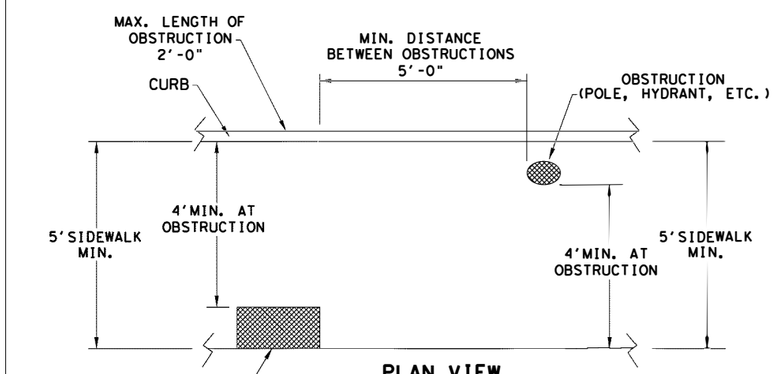

PLAN VIEW

PLACEMENT OF STREET FIXTURES

NOTE: ITEMS NOT INTENDED FOR PUBLIC USE. MINIMUM 4' X 4' CLEAR GROUND SPACE REQUIRED AT PUBLIC USE FIXTURES.

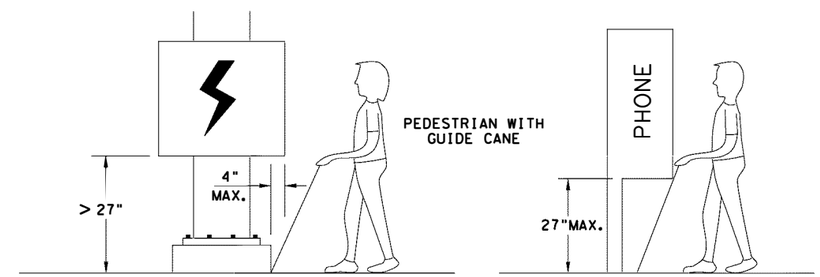

WHEN AN OBSTRUCTION OF A HEIGHT GREATER THAN 27" FROM THE SURFACE WOULD CREATE A PROTRUSION OF MORE THAN 4" INTO THE PEDESTRIAN CIRCULATION AREA, CONSTRUCT ADDITIONAL CURB OR FOUNDATION AT THE BOTTOM TO PROVIDE A MAXIMUM 4" OVERHANG.

PROTRUDING OBJECTS OF A HEIGHT ≤27" ARE DETECTABLE BY CANE AND DO NOT REQUIRE ADDITIONAL TREATMENT.

DETECTION BARRIER FOR VERTICAL CLEARANCE < 80"

Texas Department of Transportation — Design Division Standard

PEDESTRIAN FACILITIES CURB RAMPS

PED-18

FILE: ped18	DN: TxDOT	DW: VP	CK: KM	CK: PK & JG
© TxDOT: MARCH, 2002	CONT	SECT	JOB	HIGHWAY
REVISIONS	0101	06	095	US-181
REVISED 08, 2005 REVISED 06, 2012 REVISED 01, 2018	DIST		COUNTY	SHEET NO.
	CRP		NUECES	157

DATE:
FILE:

DISCLAIMER:
The use of this standard is governed by the "Texas Engineering Practice Act". No warranty of any kind is made by TxDOT for any purpose whatsoever. TxDOT assumes no responsibility for the conversion of this standard to other formats or for incorrect results or damages resulting from its use.

TYPICAL CROSSING LAYOUTS

SEE SHEET 1 OF 4 FOR DETAILS AND DIMENSIONS

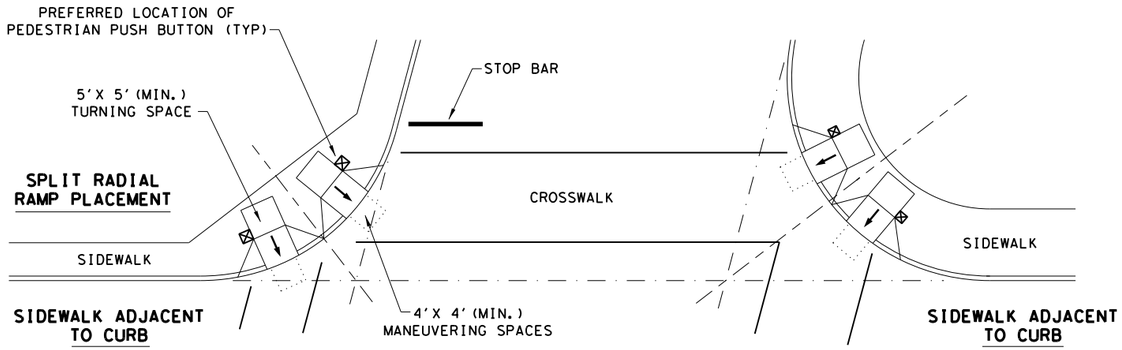

SKEWED INTERSECTION WITH "LARGE" RADIUS

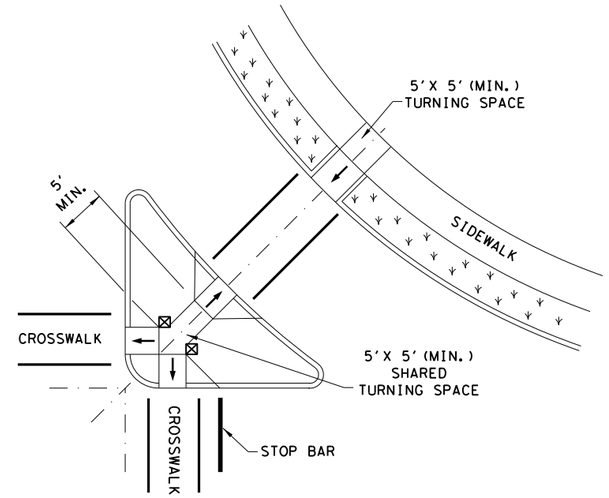

AT INTERSECTION
W/FREE RIGHT TURN & ISLAND

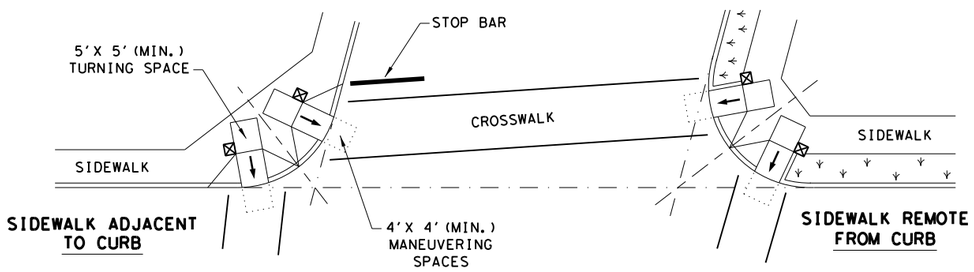

SKEWED INTERSECTION WITH "SMALL" RADIUS

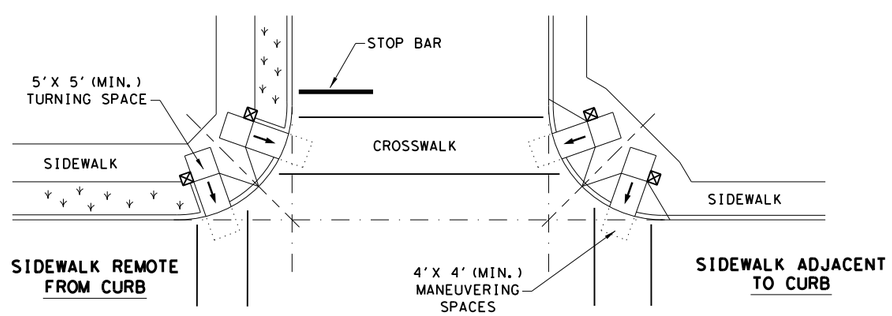

NORMAL INTERSECTION WITH "SMALL" RADIUS

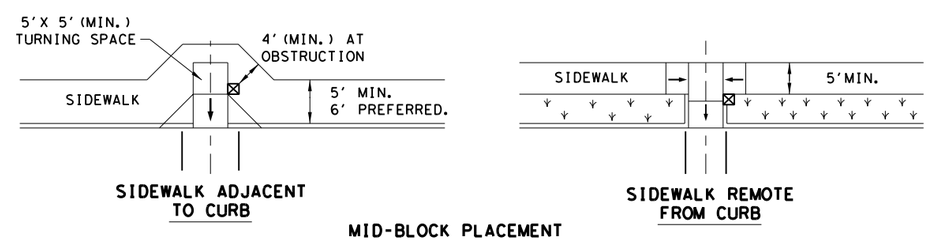

MID-BLOCK PLACEMENT
PERPENDICULAR RAMPS

LEGEND:

SHOWS DOWNWARD SLOPE. →

DENOTES PREFERRED LOCATION OF PEDESTRIAN PUSH BUTTON (IF APPLICABLE). ⊠

DENOTES PLANTING OR NON-WALKING SURFACE NOT PART OF PEDESTRIAN CIRCULATION PATH.

SHEET 4 OF 4

Texas Department of Transportation — Design Division Standard

PEDESTRIAN FACILITIES CURB RAMPS

PED-18

FILE: ped18	DN: TxDOT	CK: KM	DW: VP	CK: PK & JG
© TxDOT: MARCH, 2002	CONT	SECT	JOB	HIGHWAY
REVISIONS	0101	06	095	US-181
REVISED 08, 2005 REVISED 06, 2012 REVISED 01, 2018	DIST		COUNTY	SHEET NO.
	CRP		NUECES	158

DATE:
FILE:

DISCLAIMER:
The use of this standard is governed by the "Texas Engineering Practice Act". No warranty of any kind is made by TxDOT for any purpose whatsoever. TxDOT assumes no responsibility for the conversion of this standard to other formats or for incorrect results or damages resulting from its use.

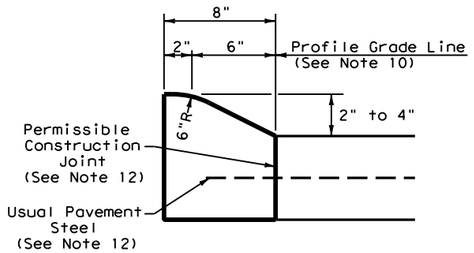

TYPE I CURB (MONOLITHIC)
2" - 4" HEIGHT

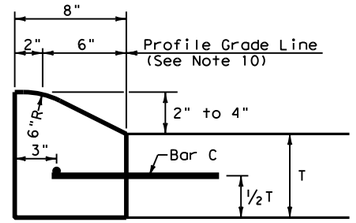

TYPE I CURB
2" - 4" HEIGHT

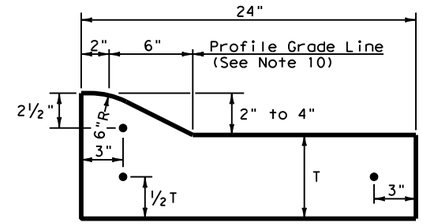

TYPE I CURB AND GUTTER
2" - 4" HEIGHT

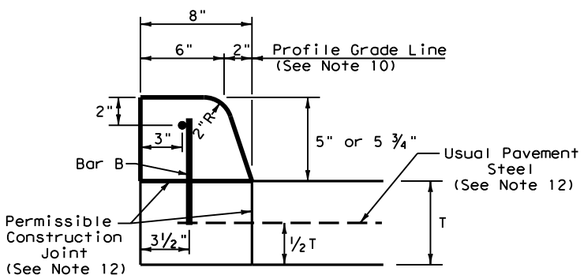

TYPE II CURB (MONOLITHIC)
5" - 5 ¾" HEIGHT

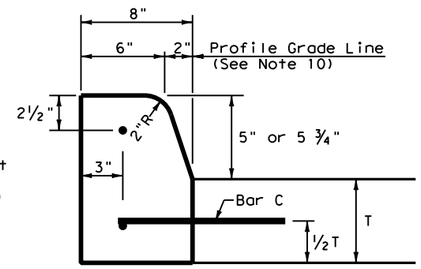

TYPE II CURB
5" - 5 ¾" HEIGHT

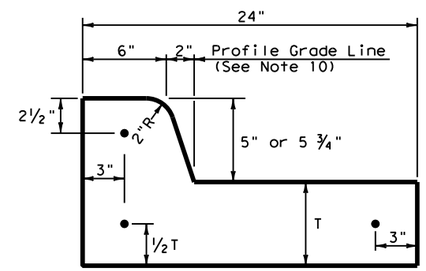

TYPE II CURB AND GUTTER
5" - 5 ¾" HEIGHT

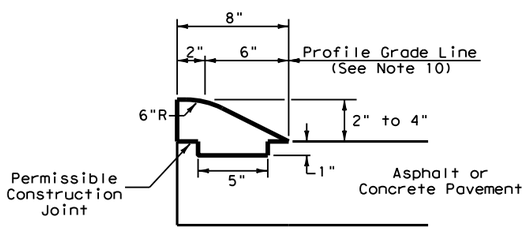

TYPE III CURB (KEYED)
2" - 4" HEIGHT

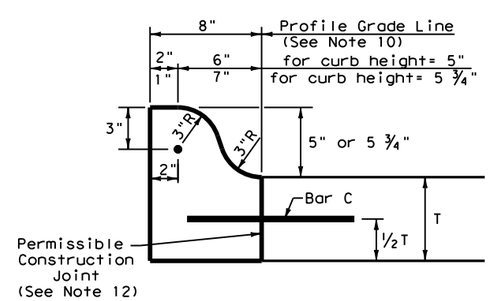

TYPE IIa CURB
5" - 5 ¾" HEIGHT

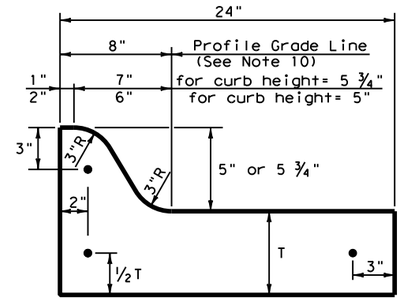

TYPE IIa CURB AND GUTTER
5" - 5 ¾" HEIGHT

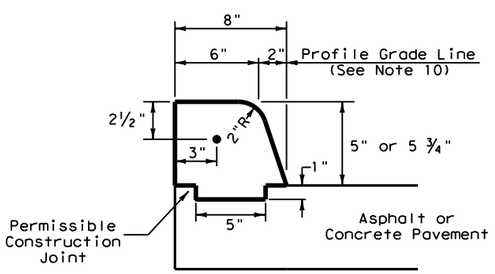

TYPE IV CURB (KEYED)
5" - 5 ¾" HEIGHT

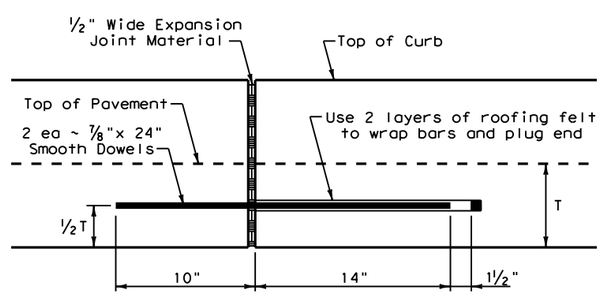

EXPANSION JOINT DETAIL

Curb Transition Note:
Field conditions may require a longer or shorter transition, and shall be shown elsewhere in the plans, or as directed by the Engineer.

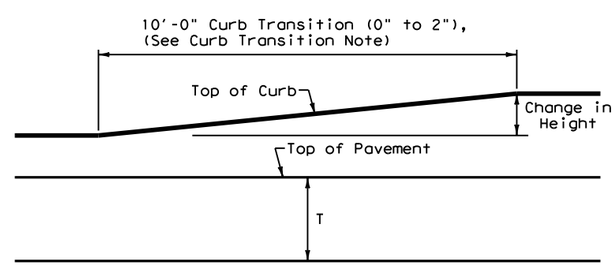

CURB TRANSITION
Note: To be paid for as Highest Curb

General Notes

1. All materials and construction shall be in accordance with Item 529, "Concrete Curb, Gutter, and Combined Curb and Gutter."
2. Concrete shall be Class A.
3. When reinforcing bars are used, they shall be No. 4 unless otherwise shown. The use of synthetic fiber in lieu of steel reinforcing is acceptable, provided the fiber producer is on the Department Producer List (MPL), maintained by TxDOT, Construction Division.
4. Round exposed sharp edges with a rounding tool, to a minimum radius of ¼ inch.
5. All existing curbs and driveways to be removed shall be sawed or removed at existing joints.
6. Where concrete curb is placed on existing concrete pavement, the pavement shall be drilled and the reinforcing bars grouted in place.
7. Expansion and contraction joints shall be constructed to match pavement joints in all curbs and curb and gutter adjacent to jointed concrete pavement. Where placement of curb or curb and gutter is not adjacent to concrete pavement, expansion joints shall be provided at structures, curb returns at streets, and at locations directed by The Engineer.
8. Vertical and horizontal dowel bars and transverse reinforcing bars shall be placed at four feet C~C.
9. Dimension 'T' shown is the thickness of concrete pavement. When curb is installed adjacent to flexible pavement dimension 'T' is 8" maximum.
10. Usual profile grade line. Refer to typical sections and plan-profile sheets for exact locations.
11. One-half inch expansion joint material shall be provided where curb or curb and gutter is adjacent to sidewalk or riprap.
12. When vertical permissible construction joints are used, resulting in a longitudinal construction joint in the pavement, the longitudinal pavement steel shall be placed in accordance with pavement details shown elsewhere in the plans for longitudinal construction joints. Reinforcing steel for curb section shall then conform to that required for concrete curb.

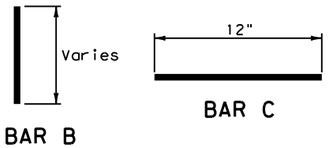

Texas Department of Transportation — Design Division Standard

CONCRETE CURB AND CURB AND GUTTER

CCCG-12

FILE: cccg12.dgn	DN: TxDOT	CK: AM	DW: VP	CK: VP
© TxDOT: 1995	CONT	SECT	JOB	HIGHWAY
REVISIONS UPDATED 2012 - VP	0101	06	095	US-181
	DIST		COUNTY	SHEET NO.
	CRP		NUECES	159

DATE:
FILE:

Locate tube on side of plant facing inside planting bed or facing adjacent plants. Do not locate tube to face turf or other areas to be mowed.

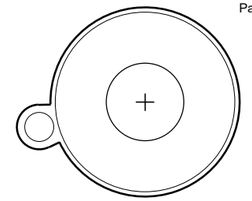

PLAN VIEW
PALM TREE AND PERFORATED TUBE

IF PALM MATERIAL FALLS TO THE GROUND DURING DELIVERY, CONSTRUCTION, ESTABLISHMENT, OR MAINTENANCE, IT IMMEDIATELY BECOMES THE PROPERTY OF THE CONTRACTOR AND MUST BE REPLACED AT CONTRACTOR'S EXPENSE.

VEGETATIVE WATERING SCHEDULE FOR PALMS ONLY

PHASE	ITEM DESCRIPTION	FREQUENCY AND RATE
Item 192.3 Construction	Item 192.3.7. Watering is incidental to Item 192 and is not paid for separately	Maintain the root ball and surrounding backfill evenly moist, but never saturated. See notes this schedule. Submit watering schedule to engineer for approval prior to installation.
Item 192.3.15 Maintenance	Item 192.3.15.1. Watering is incidental to Item 192 and is not paid for separately	
Item 193 Landscape Establishment (When Shown In Plans)	Item 193.3.3. Watering is incidental to Item 193 and is not paid for separately.	

NOTES:
Apply water over the rootball within the tree well only. Adjust rate and frequency to meet site conditions and/or weather as approved or directed by engineer.

Monitor watering to maintain rootball and surrounding backfill evenly moist, but not saturated. Inspect monitor tubes and pump out standing water. Daily inspection and pumping is required when rootball is over-saturated by rain, run-off, watering or other events.

Plant material in poor condition due to the failure to apply the specified amount of water within the time allowed or overwatering will be replaced at contractor's expense.

PROVIDE MONTHLY METER READINGS OF WATER APPLIED.

Prior to arrival at project or storage area, provide watering plan(s) of plants to be installed or stored. Watering plan(s) must be approved by engineer prior to delivery to project or storage area.

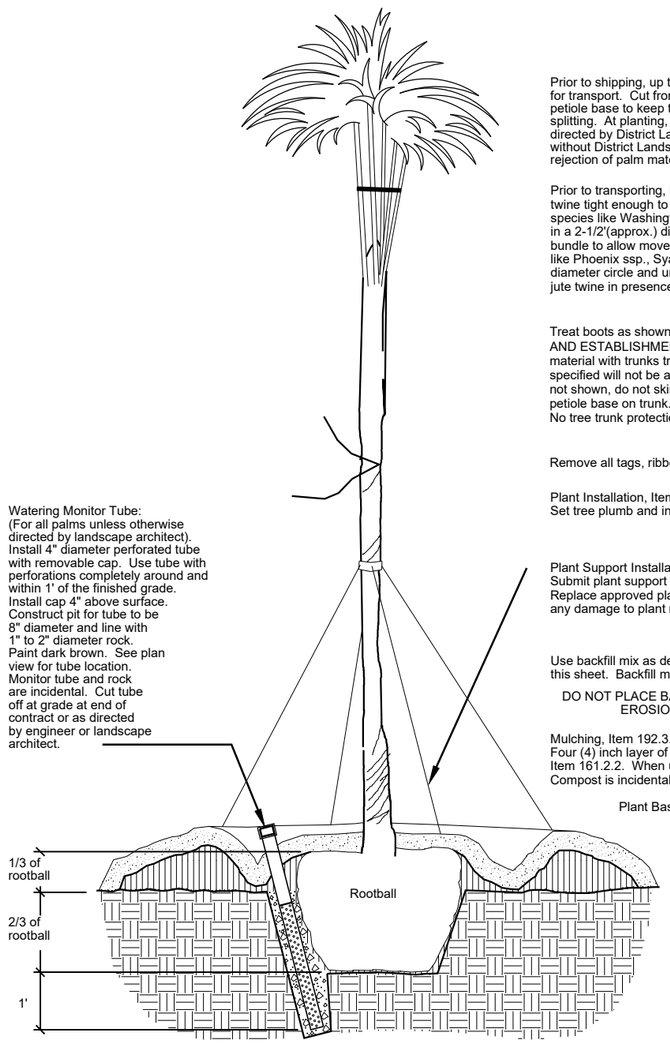

Prior to shipping, up to one-half of fronds may be removed for transport. Cut fronds 3" above the split in the petiole base to keep the petiole base in one piece, instead of splitting. At planting, additional frond trimming will be as directed by District Landscape Architect. Additional trimming without District Landscape Architect's direction may result in rejection of palm material.

Prior to transporting, bundle foliage with biodegradable jute twine tight enough to support terminal bud. Tie palmate frond species like Washingtonia ssp., Sabal ssp., and Livistonia ssp. in a 2-1/2'(approx.) diameter circle and at time of planting loosen bundle to allow movement of fronds. Tie pinate frond species like Phoenix ssp., Syagrus ssp. and Butia ssp. in a 5'(approx.) diameter circle and untie at time of planting. Loosen and/or untie jute twine in presence of engineer or landscape architect.

Treat boots as shown on "PLANTING AND ESTABLISHMENT - SHEET 4 of 8". Palm material with trunks treated different than specified will not be accepted. If treatment is not shown, do not skin any part of trunk. Leave petiole base on trunk.
No tree trunk protection (tree wrap) required.

Remove all tags, ribbons, ties and markers.

Plant Installation, Item 192.3.5
Set tree plumb and in center of pit.

Plant Support Installation, Item 192.3.10
Submit plant support system detail to engineer for approval. Replace approved plant support system if fails or if causes any damage to plant material.

Use backfill mix as described in notes on this sheet. Backfill mix is incidental.

DO NOT PLACE BACKFILL OVER TOP OF ROOTBALL, EROSION CONTROL COMPOST ONLY

Mulching, Item 192.3.14
Four (4) inch layer of Erosion Control Compost as described in Item 161.2.2. When used as mulch under Item 192, Erosion Control Compost is incidental to this item and not paid for separately.

Plant Basin Construction, Item 192.3.6

Finished grade

Rootball diameter size to be min. 12 inches from the edge of trunk. Rootball shall be shrink wrapped or containerized for transporting, burlap NOT allowed.

Plant Pit Excavation Item 192.3.4
Construct pit to be 2/3 depth and same shape of rootball. Construct pit large enough to easily accept rootball. Maximum distance between edge of rootball and pit is 3 inches. See notes this sheet for required treatments of soil and rootball prior to planting.

Existing soil

Use compacted soil to level tree and to establish proper rootball elevation

PALM TREE PLANTING

GENERAL NOTES:
1. Reference Item 192 of the Texas Standard Specifications for Construction and Maintenance of Highways, Streets, and Bridges 2014 for specifications, dimensions, volumes, and measurements not shown.
2. Reference Item 19.3, mark plant locations and bed outlines.
3. Verify that all planting meets the following clear zone minimum distance requirements from the edge of the travel lane:
Trees: 32' unless protected by a barrier,
Shrubs: 16' unless protected by a barrier,
Groundcovers and vines: no minimum distance.
Engineer has final authority over all clear zone related issues.
4. Roadway edges shown on the plans are to be considered the edge of travel lane unless labeled otherwise.
5. Locate and stake all underground conduits and utilities associated with but not limited to: CTMS, CTMS power supply, lighting, signal wires and detectors, gas, electric, telephone, fiber optics, etc.
6. Repair and/or replace any damaged underground conduits and utilities at contractor's expense.
7. Locate and stake existing ground boxes, inlets, culverts, manholes, etc. within the project area with a 4' wooden stake painted orange. Maintain the stakes in place for duration of the contract. Remove stakes when directed by engineer.
8. Repair and/or replace any damaged structures, pavement, riprap, equipment, materials, slopes, vegetation, and surfaces at contractor's expense.

PALM TREATMENTS, APPLICATIONS, AND SPECIALIST NOTES:
9. Treatments to plant material to ensure health and quality of plant from disease, stress, insects, or other detrimental impacts are incidental.
10. Applications of fertilizers, vitamins and hormones are incidental.
11. Multiple treatments and applications are incidental.
12. Required soil tests are incidental.
13. Palm specialists are incidental. Submit qualifications of palm specialist at preconstruction meeting for approval by engineer.

REQUIREMENTS PRIOR TO PLANTING:
14. Test pH of soil after bed preparation work is completed. Collect soil sample 18" below final surface. Provide results to landscape architect and palm specialist. Provide comments and recommendations from palm specialist to landscape architect. Desired soil pH is between 6.5 and 6.8. When soil pH is high, incorporate an approved aluminum sulphate into soil as recommended by manufacturer and pH test. Additional applications and pH testing may be required to adjust pH before and after planting.
15. Provide documentation from palm specialist verifying palm species, condition and health of all palm materials to engineer.
* 16. Spray foliage with an approved anti-desiccant.
17. Maintain rootball, trunk, and frond moisture conditions during transportation and storage activities.
* 18. Apply an approved soil fungicide to entire rootball.
19. For further information on identifying insects, diseases, and nutritional problems, the palm specialist will be contacted.

REQUIREMENTS AT TIME OF PLANTING:
* 20. Apply an approved aluminum based foliar fungicide to tops and bottoms of fronds and bud.
* 21. After fungicide has dried, apply an approved insecticide to the fronds and trunk.
* 22. After insecticide has dried, apply an approved anti-desiccant to the fronds and trunk.
23. Test soil for pH level and treat as specified in previous notes on this sheet.
* 24. Incorporate "Palm Saver" or an approved equal palm fertilizer into the backfill around the rootball.
25. When backfilling around rootball, work backfill equally around rootball in 6" lifts to eliminate air pockets.
* 26. Soak each lift up to finish grade using an approved liquid form of vitamins and hormones specifically for palms diluted with water at a ratio recommended by manufacturer. Use a liquid which contains but is not limited to Mg and Mn.
27. Use backfill consisting of the following: 70% existing soil removed from the plant pit and 15% Erosion Control Compost as described in Item 161.2.2 Compost and 15% rock limited to 1 inch to 1-1/2 inch. Work backfill equally around the rootball as described in previous notes on this sheet. Rock and compost are incidental.
28. Use Erosion Control Compost for surface application for palm planting as described in Item 161.2.2 Compost. Compost for surface application for palm planting is incidental.
29. Maintain soil moisture conditions as specified in watering schedule on this sheet.

REQUIREMENTS AFTER PLANTING:
30. Every 4 months, test soil for pH level and treat as specified in previous notes on this sheet. Provide the pH soil test report shall be provided to Landscape Architect and Palm Specialist in order to determine type and amount of fertilizer.
* 31. Fertilize palms every 4 months with a combination of "Palm Saver", K and Mg in liquid form with granular form of K and Mg sulfates.
32. Apply all granular palm fertilizers by drilling 10" into soil around rootball.
* 33. Application of fertilizers and micronutrients may be adjusted according to soil and palm conditions.
34. Maintain watering and soil moisture conditions as specified on this sheet.
35. For further recommendations for treatment of insects, diseases, and nutritional problems, contact palm specialist.
36. At anytime remove any/all dead fronds as directed.

* Complete this work in the presence of the engineer.

STATE OF TEXAS
MICHAEL P. MAUER
1510
REGISTERED
LANDSCAPE ARCHITECT
03/13/2023

©2014
Texas Department of Transportation
HOUSTON DISTRICT

PALM PLANTING AND ESTABLISHMENT

SHEET 1 of 1
(P 104)

Details not to scale
PALM TREE

FILE:	FED DIV	STATE	PROJECT NUMBER			SHEET
	X	TEXAS	(See Title Sheet)			160
REVISIONS:	DIST	COUNTY	CONTROL	SECT	JOB	HIGHWAY
	CRP	NUECES	0101	06	095	US-181